YASKAWA

Σ-7-Series AC Servo Drive

Σ-7S SERVOPACK with MECHATROLINK-III Communications References

RJ-45 Connectors

Product Manual

Model: SGD7S-□□□□30A

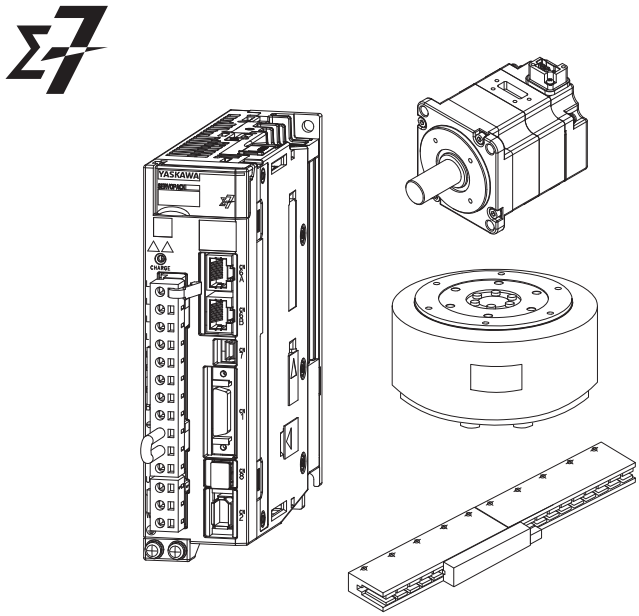

Basic Information on SERVOPACKs 1

Selecting a SERVOPACK 2

SERVOPACK Installation 3

Wiring and Connecting SERVOPACKs 4

Basic Functions That Require Setting before Operation 5

Application Functions 6

Trial Operation and Actual Operation 7

Tuning 8

Monitoring 9

Fully-Closed Loop Control 10

Safety Functions 11

Maintenance 12

Parameter Lists 13

Appendices 14

MANUAL NO. SIEP S800001 62J

Copyright © 2014 YASKAWA ELECTRIC CORPORATION

All rights reserved. No part of this publication may be reproduced, stored in a retrieval system, or transmitted, in any form, or by any means, mechanical, electronic, photocopying, recording, or otherwise, without the prior written permission of Yaskawa. No patent liability is assumed with respect to the use of the information contained herein. Moreover, because Yaskawa is constantly striving to improve its high-quality products, the information contained in this manual is subject to change without notice. Every precaution has been taken in the preparation of this manual. Nevertheless, Yaskawa assumes no responsibility for errors or omissions. Neither is any liability assumed for damages resulting from the use of the information contained in this publication.

About this Manual

This manual provides information required to select Σ-7S SERVOPACKs with MECHATROLINK-III Communications References and RJ-45 Connectors for Σ-7-Series AC Servo Drives, and to design, perform trial operation of, tune, operate, and maintain the Servo Drives.

Read and understand this manual to ensure correct usage of the Σ-7-Series AC Servo Drives.

Keep this manual in a safe place so that it can be referred to whenever necessary.

Outline of Manual

The contents of the chapters of this manual are described in the following table.

Refer to these chapters as required.

Chapter	Chapter Title	Contents
1	Basic Information on SERVOPACKs	Provides information required to select SERVOPACKs, such as SERVOPACK models and combinations with Servomotors.
2	Selecting a SERVOPACK	Provides information required to select SERVOPACKs, such as specifications, block diagrams, dimensional drawings, and connection examples.
3	SERVOPACK Installation	Provides information on installing SERVOPACKs in the required locations.
4	Wiring and Connecting SERVOPACKs	Provides information on wiring and connecting SERVOPACKs to power supplies and peripheral devices.
5	Basic Functions That Require Setting before Operation	Describes the basic functions that must be set before you start servo system operation. It also describes the setting methods.
6	Application Functions	Describes the application functions that you can set before you start servo system operation. It also describes the setting methods.
7	Trial Operation and Actual Operation	Provides information on the flow and procedures for trial operation and convenient functions to use during trial operation.
8	Tuning	Provides information on the flow of tuning, details on tuning functions, and related operating procedures.
9	Monitoring	Provides information on monitoring SERVOPACK product information and SERVOPACK status.
10	Fully-Closed Loop Control	Provides detailed information on performing fully-closed loop control with the SERVOPACK.
11	Safety Functions	Provides detailed information on the safety functions of the SERVOPACK.
12	Maintenance	Provides information on the meaning of, causes of, and corrections for alarms and warnings.
13	Parameter Lists	Provides information on the parameters.
14	Appendices	Provides information on interpreting panel displays and tables of corresponding SERVOPACK and SigmaWin+ function names.

Related Documents

The relationships between the documents that are related to the Servo Drives are shown in the following figure. The numbers in the figure correspond to the numbers in the table on the following pages. Refer to these documents as required.

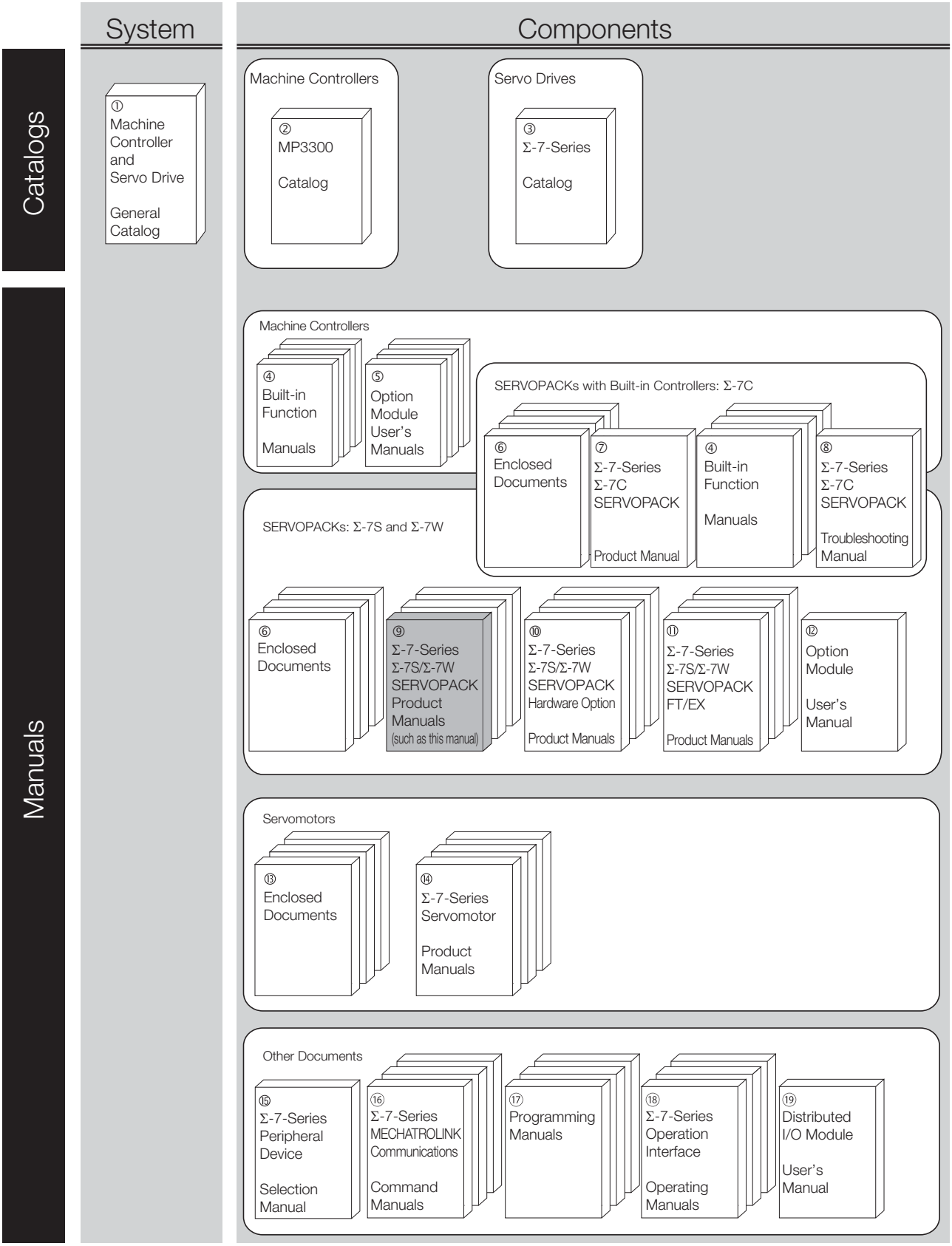

Classification	Document Name	Document No.	Description
① Machine Controller and Servo Drive General Catalog	Machine Controller and AC Servo Drive Solutions Catalog	KAEP S800001 22	Describes the features and application examples for combinations of MP3000-Series Machine Controllers and Σ-7-Series AC Servo Drives.
② MP3300 Catalog	Machine Controller MP3300	KAEP C880725 03	Provides detailed information on MP3300 Machine Controllers, including features and specifications.
③ Σ-7-Series Catalog	AC Servo Drives Σ-7 Series	KAEP S800001 23	Provides detailed information on Σ-7-Series AC Servo Drives, including features and specifications.
④ Built-in Function Manuals	Σ-7-Series AC Servo Drive Σ-7C SERVOPACK Motion Control User's Manual	SIEP S800002 03	Provides detailed information on the specifications, system configuration, and application methods of the Motion Control Function Modules (SVD, SVC4, and SVR4) for Σ-7-Series Σ-7C SERVOPACKs.
	Machine Controller MP3000 Series Communications User's Manual	SIEP C880725 12	Provides detailed information on the specifications, system configuration, and communications connection methods for the Ethernet communications that are used with MP3000-Series Machine Controllers and Σ-7-Series Σ-7C SERVOPACKs.
⑤ Option Module User's Manuals	Machine Controller MP2000 Series Communication Module User's Manual	SIEP C880700 04	Provide detailed information on the specifications and communications methods for the Communications Modules that can be mounted to MP3000-Series Machine Controllers and Σ-7-Series Σ-7C SERVOPACKs.
	Machine Controller MP2000 Series 262IF-01 FL-net Communication Module User's Manual	SIEP C880700 36	
	Machine Controller MP2000 Series 263IF-01 EtherNet/IP Communication Module User's Manual	SIEP C880700 39	
	Machine Controller MP2000 Series I/O Module User's Manual	SIEP C880700 34	Provide detailed information on the specifications and communications methods for the I/O Modules that can be mounted to MP3000-Series Machine Controllers and Σ-7-Series Σ-7C SERVOPACKs.
	Machine Controller MP2000 Series Analog Input/Analog Output Module AI-01/AO-01 User's Manual	SIEP C880700 26	
	Machine Controller MP2000 Series Counter Module CNTR-01 User's Manual	SIEP C880700 27	

Continued on next page.

Continued from previous page.

Classification	Document Name	Document No.	Description
⑥ Enclosed Documents	Σ-7-Series AC Servo Drive Σ-7S and Σ-7W SERVOPACK Safety Precautions	TOMP C710828 00	Provides detailed information for the safe usage of Σ-7-Series SERVOPACKs.
	Σ-V-Series/Σ-V-Series for Large-Capacity Models/ Σ-7-Series Safety Precautions Option Module	TOBP C720829 00	Provides detailed information for the safe usage of Option Modules.
	Σ-V-Series/Σ-V-Series for Large-Capacity Models/ Σ-7-Series Installation Guide Command Option Module	TOBP C720829 01	Provides detailed procedures for installing the Command Option Module in a SERVOPACK.
	Σ-V-Series/Σ-V-Series for Large-Capacity Models/ Σ-7-Series Installation Guide Fully-closed Module	TOBP C720829 03	Provides detailed procedures for installing the Fully-closed Module in a SERVOPACK.
	Σ-V-Series/Σ-V-Series for Large-Capacity Models/ Σ-7-Series Installation Guide Safety Module	TOBP C720829 06	Provides detailed procedures for installing the Safety Module in a SERVOPACK.
	Σ-V-Series/Σ-V-Series for Large-Capacity Models/ Σ-7-Series Installation Guide INDEXER Module	TOBP C720829 02	Provides detailed procedures for installing the INDEXER Module in a SERVOPACK.
	Σ-V-Series/Σ-V-Series for Large-Capacity Models/ Σ-7-Series Installation Guide DeviceNet Module	TOBP C720829 07	Provides detailed procedures for installing the DeviceNet Module in a SERVOPACK.
⑦ Σ-7-Series Σ-7C SERVOPACK Product Manual	Σ-7-Series AC Servo Drive Σ-7C SERVOPACK Product Manual	SIEP S800002 04	Provides detailed information on selecting Σ-7-Series Σ-7C SERVOPACKs; installing, connecting, setting, testing in trial operation, and tuning Servo Drives; writing, monitoring, and maintaining programs; and other information.
⑧ Σ-7-Series Σ-7C SERVOPACK Troubleshooting Manual	Σ-7-Series AC Servo Drive Σ-7C SERVOPACK Troubleshooting Manual	SIEP S800002 07	Provides detailed troubleshooting information for Σ-7-Series Σ-7C SERVOPACKs.

Continued on next page.

Continued from previous page.

Classification	Document Name	Document No.	Description
⑨ Σ-7-Series Σ-7S/Σ-7W SERVOPACK Product Manuals	Σ-7-Series AC Servo Drive Σ-7S SERVOPACK with MECHATROLINK-III Communications References Product Manual	SIEP S800001 28	Provide detailed information on selecting Σ-7-Series Σ-7S and Σ-7W SERVOPACKs; installing, connecting, setting, testing in trial operation, tuning, monitoring, and maintaining Servo Drives; and other information.
	Σ-7-Series AC Servo Drive Σ-7S SERVOPACK with MECHATROLINK-II Communications References Product Manual	SIEP S800001 27	
	Σ-7-Series AC Servo Drive Σ-7S SERVOPACK with Analog Voltage/Pulse Train References Product Manual	SIEP S800001 26	
	Σ-7-Series AC Servo Drive Σ-7S SERVOPACK Command Option Attachable Type with INDEXER Module Product Manual	SIEP S800001 64	
	Σ-7-Series AC Servo Drive Σ-7S SERVOPACK Command Option Attachable Type with DeviceNet Module Product Manual	SIEP S800001 70	
	Σ-7-Series AC Servo Drive Σ-7S SERVOPACK with MECHATROLINK-III Communications References RJ-45 Connectors Product Manual	This manual (SIEP S800001 62)	
	Σ-7-Series AC Servo Drive Σ-7W SERVOPACK with MECHATROLINK-III Communications References Product Manual	SIEP S800001 29	
	Σ-7-Series AC Servo Drive Σ-7W SERVOPACK with MECHATROLINK-III Communications References RJ-45 Connectors Product Manual	SIEP S800001 63	
⑩ Σ-7-Series Σ-7S/Σ-7W SERVOPACK with Hardware Option Specifications Product Manuals	Σ-7-Series AC Servo Drive Σ-7S/Σ-7W SERVOPACK with Hardware Option Specifica- tions Dynamic Brake Product Manual	SIEP S800001 73	Provide detailed information on Hardware Options for Σ-7-Series SERVOPACKs.
	Σ-7-Series AC Servo Drive Σ-7W/Σ-7C SERVOPACK with Hardware Option Specifica- tions HWBB Function Product Manual	SIEP S800001 72	

Continued on next page.

Continued from previous page.

Classification	Document Name	Document No.	Description
⑪ Σ-7-Series Σ-7S/Σ-7W SERVOPACK FT/EX Product Manuals	Σ-7-Series AC Servo Drive Σ-7S SERVOPACK with FT/EX Specification for Indexing Application Product Manual	SIEP S800001 84	Provide detailed information on the FT/EX Option for Σ-7-Series SERVOPACKs.
	Σ-7-Series AC Servo Drive Σ-7S SERVOPACK with FT/EX Specification for Tracking Application Product Manual	SIEP S800001 89	
	Σ-7-Series AC Servo Drive Σ-7S SERVOPACK with FT/EX Specification for Application with Special Motor, SGM7D Motor Product Manual	SIEP S800001 91	
	Σ-7-Series AC Servo Drive Σ-7S SERVOPACK with FT/EX Specification for Press and injection Molding Application Product Manual	SIEP S800001 94	
	Σ-7-Series AC Servo Drive Σ-7S SERVOPACK with FT/EX Specification for Transfer and Alignment Application Product Manual	SIEP S800001 95	
	Σ-7-Series AC Servo Drive Σ-7S SERVOPACK with FT/EX Specification for Torque/Force Assistance for Conveyance Application Product Manual	SIEP S800002 09	
	Σ-7-Series AC Servo Drive Σ-7S SERVOPACK with FT/EX Specification for Cutting Application Feed Shaft Motor Product Manual	SIEP S800002 10	
	Σ-7-Series AC Servo Drive Σ-7S SERVOPACK with FT/EX Specification for Three-Point Latching for Conveyance Application Product Manual	SIEP S800002 17	
	Σ-7-Series AC Servo Drive Σ-7S SERVOPACK with FT/EX Specification for Semi-/Fully-Closed Loop Control Online Switching for Conveyance Application Product Manual	SIEP S800002 27	
	Σ-7-Series AC Servo Drive Σ-7W SERVOPACK with FT/EX Specification for Gantry Applications Product Manual	SIEP S800002 29	
⑫ Option Module User's Manual	AC Servo Drives Σ-V Series/Σ-V Series for Large-Capacity Models/ Σ-7 Series User's Manual Safety Module	SIEP C720829 06	Provides detailed information required for the design and maintenance of a Safety Module.

Continued on next page.

Continued from previous page.

Classification	Document Name	Document No.	Description
⑬ Enclosed Documents	AC Servo Drive Rotary Servomotor Safety Precautions	TOBP C230260 00	Provides detailed information for the safe usage of Rotary Servomotors and Direct Drive Servomotors.
	AC Servomotor Linear Σ Series Safety Precautions	TOBP C230800 00	Provides detailed information for the safe usage of Linear Servomotors.
⑭ Σ-7-Series Servomotor Product Manuals	Σ-7-Series AC Servo Drive Rotary Servomotor Product Manual	SIEP S800001 36	Provide detailed information on selecting, installing, and connecting the Σ-7-Series Servomotors.
	Σ-7-Series AC Servo Drive Linear Servomotor Product Manual	SIEP S800001 37	
	Σ-7-Series AC Servo Drive Direct Drive Servomotor Product Manual	SIEP S800001 38	
⑮ Σ-7-Series Peripheral Device Selection Manual	Σ-7-Series AC Servo Drive Peripheral Device Selection Manual	SIEP S800001 32	Provides the following information in detail for Σ-7-Series Servo Systems. • Cables: Models, dimensions, wiring materials, connector models, and connection specifications • Peripheral devices: Models, specifications, diagrams, and selection (calculation) methods
⑯ Σ-7-Series MECHATROLINK Communications Command Manuals	Σ-7-Series AC Servo Drive MECHATROLINK-II Communications Command Manual	SIEP S800001 30	Provides detailed information on the MECHATROLINK-II communications commands that are used for a Σ-7-Series Servo System.
	Σ-7-Series AC Servo Drive MECHATROLINK-III Communications Standard Servo Profile Command Manual	SIEP S800001 31	Provides detailed information on the MECHATROLINK-III communications standard servo profile commands that are used for a Σ-7-Series Servo System.
⑰ Programming Manuals	Machine Controller MP3000 Series Ladder Programming Manual	SIEP C880725 13	Provides detailed information on the ladder programming specifications and instructions for MP3000-Series Machine Controllers and Σ-7-Series Σ-7C SERVOPACKs.
	Machine Controller MP3000 Series Motion Programming Manual	SIEP C880725 14	Provides detailed information on the motion programming and sequence programming specifications and instructions for MP3000-Series Machine Controllers and Σ-7-Series Σ-7C SERVOPACKs.
⑱ Σ-7-Series Operation Interface Operating Manuals	Machine Controller MP2000/MP3000 Series Engineering Tool MPE720 Version 7 User's Manual	SIEP C880761 03	Describes in detail how to operate MPE720 version 7.
	Σ-7-Series AC Servo Drive Digital Operator Operating Manual	SIEP S800001 33	Describes the operating procedures for a Digital Operator for a Σ-7-Series Servo System.
	AC Servo Drive Engineering Tool SigmaWin+ Operation Manual	SIET S800001 34	Provides detailed operating procedures for the SigmaWin+ Engineering Tool for a Σ-7-Series Servo System.
⑲ Distributed I/O Module User's Manual	MECHATROLINK-III Compatible I/O Module User's Manual	SIEP C880781 04	Describes the functions, specifications, operating methods, and MECHATROLINK-III communications for the Remote I/O Modules for MP2000/MP3000-Series Machine Controllers.

Using This Manual

◆ Technical Terms Used in This Manual

The following terms are used in this manual.

Term	Meaning
Servomotor	A Σ-7-Series Rotary Servomotor, Direct Drive Servomotor, or Linear Servomotor.
Rotary Servomotor	A generic term used for a Σ-7-Series Rotary Servomotor (SGM7M, SGM7J, SGM7A, SGM7P, SGM7G, or SGMMV) or a Direct Drive Servomotor (SGM7E, SGM7F, SGMCV, or SGMCS). The descriptions will specify when Direct Drive Servomotors are excluded.
Linear Servomotor	A Σ-7-Series Linear Servomotor (SGLG, SGLF, or SGLT).
SERVOPACK	A Σ-7-Series Σ-7S Servo Amplifier with MECHATROLINK-III Communications References.
Servo Drive	The combination of a Servomotor and SERVOPACK.
Servo System	A servo control system that includes the combination of a Servo Drive with a host controller and peripheral devices.
servo ON	Supplying power to the motor.
servo OFF	Not supplying power to the motor.
base block (BB)	Shutting OFF the power supply to the motor by shutting OFF the base current to the power transistor in the SERVOPACK.
servo lock	A state in which the motor is stopped and is in a position loop with a position reference of 0.
Main Circuit Cable	One of the cables that connect to the main circuit terminals, including the Main Circuit Power Supply Cable, Control Power Supply Cable, and Servomotor Main Circuit Cable.
MECHATROLINK-III Communications Cable (RJ-45)	MECHATROLINK-III Communications Cable for RJ-45 connectors.
SigmaWin+	The Engineering Tool for setting up and tuning Servo Drives or a computer in which the Engineering Tool is installed.

◆ Differences in Terms for Rotary Servomotors and Linear Servomotors

There are differences in the terms that are used for Rotary Servomotors and Linear Servomotors. This manual primarily describes Rotary Servomotors. If you are using a Linear Servomotor, you need to interpret the terms as given in the following table.

Rotary Servomotors	Linear Servomotors
torque	force
moment of inertia	mass
rotation	movement
forward rotation and reverse rotation	forward movement and reverse movement
CW and CCW pulse trains	forward and reverse pulse trains
rotary encoder	linear encoder
absolute rotary encoder	absolute linear encoder
incremental rotary encoder	incremental linear encoder
unit: min^{-1}	unit: mm/s
unit: N·m	unit: N

◆ Notation Used in this Manual

■ Notation for Reverse Signals

The names of reverse signals (i.e., ones that are valid when low) are written with a forward slash (/) before the signal abbreviation.

Notation Example

$\overline{\text{BK}}$ is written as /BK.

■ Notation for Parameters

The notation depends on whether the parameter requires a numeric setting (parameter for numeric setting) or requires the selection of a function (parameter for selecting functions).

- Parameters for Numeric Settings

The control methods for which the parameters apply are given.
Speed : Speed control Position : Position control Torque : Torque control

Pn100	Speed Loop Gain				Speed Position
	Setting Range	Setting Unit	Default Setting	When Enabled	Classification
	10 to 20,000	0.1 Hz	400	Immediately	Tuning

Parameter number

This is the setting range for the parameter.

This is the minimum unit (setting increment) that you can set for the parameter.

This is the parameter setting before shipment.

This is when any change made to the parameter will become effective.

This is the parameter classification.

- Parameters for Selecting Functions

Parameter		Meaning	When Enabled	Classification
Pn002	n.□0□□ (default setting)	Use the encoder according to encoder specifications.	After restart	Setup
	n.□1□□	Use the encoder as an incremental encoder.		
	n.□2□□	Use the encoder as a single-turn absolute encoder.		

Parameter number

The notation "n.□□□□" indicates a parameter for selecting functions.
Each □ indicates the setting for one digit.
The notation shown here means that the third digit from the right is set to 2.

This column explains the selections for the function.

Notation Example

n . 0 0 0 0

Notation Examples for Pn002

Digit Notation		Numeric Value Notation	
Notation	Meaning	Notation	Meaning
Pn002 = n.□□□X	Indicates the first digit from the right in Pn002.	Pn002 = n.□□□1	Indicates that the first digit from the right in Pn002 is set to 1.
Pn002 = n.□□X□	Indicates the second digit from the right in Pn002.	Pn002 = n.□□1□	Indicates that the second digit from the right in Pn002 is set to 1.
Pn002 = n.□X□□	Indicates the third digit from the right in Pn002.	Pn002 = n.□1□□	Indicates that the third digit from the right in Pn002 is set to 1.
Pn002 = n.X□□□	Indicates the fourth digit from the right in Pn002.	Pn002 = n.1□□□	Indicates that the fourth digit from the right in Pn002 is set to 1.

◆ Engineering Tools Used in This Manual

This manual uses the interfaces of the SigmaWin+ for descriptions.

◆ Trademarks

- QR code is a trademark of Denso Wave Inc.
- MECHATROLINK is a trademark of the MECHATROLINK Members Association.
- Other product names and company names are the trademarks or registered trademarks of the respective company. “TM” and the ® mark do not appear with product or company names in this manual.

◆ Visual Aids

The following aids are used to indicate certain types of information for easier reference.

Important

Indicates precautions or restrictions that must be observed.
Also indicates alarm displays and other precautions that will not result in machine damage.

Term

Indicates definitions of difficult terms or terms that have not been previously explained in this manual.

Example Indicates operating or setting examples.

Information Indicates supplemental information to deepen understanding or useful information.

Safety Precautions

◆ Safety Information

To prevent personal injury and equipment damage in advance, the following signal words are used to indicate safety precautions in this document. The signal words are used to classify the hazards and the degree of damage or injury that may occur if a product is used incorrectly. Information marked as shown below is important for safety. Always read this information and heed the precautions that are provided.

⚠ DANGER

- Indicates precautions that, if not heeded, are likely to result in loss of life, serious injury, or fire.

⚠ WARNING

- Indicates precautions that, if not heeded, could result in loss of life, serious injury, or fire.

⚠ CAUTION

- Indicates precautions that, if not heeded, could result in relatively serious or minor injury, or in fire.

NOTICE

- Indicates precautions that, if not heeded, could result in property damage.

◆ Safety Precautions That Must Always Be Observed

■ General Precautions

⚠ DANGER

- Read and understand this manual to ensure the safe usage of the product.
- Keep this manual in a safe, convenient place so that it can be referred to whenever necessary. Make sure that it is delivered to the final user of the product.
- Do not remove covers, cables, connectors, or optional devices while power is being supplied to the SERVOPACK.
  There is a risk of electric shock, operational failure of the product, or burning.

⚠ WARNING

- Use a power supply with specifications (number of phases, voltage, frequency, and AC/DC type) that are appropriate for the product.
  There is a risk of burning, electric shock, or fire.
- Connect the ground terminals on the SERVOPACK and Servomotor to ground poles according to local electrical codes (100 Ω or less for a SERVOPACK with a 100-VAC or 200-VAC power supply, and 10 Ω or less for a SERVOPACK with a 400-VAC power supply).
  There is a risk of electric shock or fire.
- Do not attempt to disassemble, repair, or modify the product.
  There is a risk of fire or failure.
  The warranty is void for the product if you disassemble, repair, or modify it.

⚠ CAUTION

- The SERVOPACK heat sinks, regenerative resistors, External Dynamic Brake Resistors, Servomotors, and other components can be very hot while power is ON or soon after the power is turned OFF. Implement safety measures, such as installing covers, so that hands and parts such as cables do not come into contact with hot components.
  There is a risk of burn injury.
- For a 24-VDC power supply, use a power supply device with double insulation or reinforced insulation.
  There is a risk of electric shock.
- Do not damage, pull on, apply excessive force to, place heavy objects on, or pinch cables.
  There is a risk of failure, damage, or electric shock.
- The person who designs the system that uses the hard wire base block safety function must have a complete knowledge of the related safety standards and a complete understanding of the instructions in this document.
  There is a risk of injury, product damage, or machine damage.
- Do not use the product in an environment that is subject to water, corrosive gases, or flammable gases, or near flammable materials.
  There is a risk of electric shock or fire.

NOTICE

- Do not attempt to use a SERVOPACK or Servomotor that is damaged or that has missing parts.
- Install external emergency stop circuits that shut OFF the power supply and stops operation immediately when an error occurs.
- In locations with poor power supply conditions, install the necessary protective devices (such as AC reactors) to ensure that the input power is supplied within the specified voltage range.
  There is a risk of damage to the SERVOPACK.
- Use a Noise Filter to minimize the effects of electromagnetic interference.
  Electronic devices used near the SERVOPACK may be affected by electromagnetic interference.
- Always use a Servomotor and SERVOPACK in one of the specified combinations.
- Do not touch a SERVOPACK or Servomotor with wet hands.
  There is a risk of product failure.

■ Storage Precautions

⚠ CAUTION

- Do not place an excessive load on the product during storage. (Follow all instructions on the packages.)
  There is a risk of injury or damage.

NOTICE

- Do not install or store the product in any of the following locations.
  - Locations that are subject to direct sunlight
  - Locations that are subject to ambient temperatures that exceed product specifications
  - Locations that are subject to relative humidities that exceed product specifications
  - Locations that are subject to condensation as the result of extreme changes in temperature
  - Locations that are subject to corrosive or flammable gases
  - Locations that are near flammable materials
  - Locations that are subject to dust, salts, or iron powder
  - Locations that are subject to water, oil, or chemicals
  - Locations that are subject to vibration or shock that exceeds product specifications
  - Locations that are subject to radiation

  If you store or install the product in any of the above locations, the product may fail or be damaged.

■ Transportation Precautions

⚠ CAUTION

- Transport the product in a way that is suitable to the mass of the product.
- Do not use the eyebolts on a SERVOPACK or Servomotor to move the machine.
  There is a risk of damage or injury.
- When you handle a SERVOPACK or Servomotor, be careful of sharp parts, such as the corners.
  There is a risk of injury.
- Do not place an excessive load on the product during transportation. (Follow all instructions on the packages.)
  There is a risk of injury or damage.

NOTICE

- Do not hold onto the front cover or connectors when you move a SERVOPACK.
  There is a risk of the SERVOPACK falling.
- A SERVOPACK or Servomotor is a precision device. Do not drop it or subject it to strong shock.
  There is a risk of failure or damage.
- Do not subject connectors to shock.
  There is a risk of faulty connections or damage.
- If disinfectants or insecticides must be used to treat packing materials such as wooden frames, plywood, or pallets, the packing materials must be treated before the product is packaged, and methods other than fumigation must be used.
  Example: Heat treatment, where materials are kiln-dried to a core temperature of 56°C for 30 minutes or more.
  If the electronic products, which include stand-alone products and products installed in machines, are packed with fumigated wooden materials, the electrical components may be greatly damaged by the gases or fumes resulting from the fumigation process. In particular, disinfectants containing halogen, which includes chlorine, fluorine, bromine, or iodine can contribute to the erosion of the capacitors.
- Do not overtighten the eyebolts on a SERVOPACK or Servomotor.
  If you use a tool to overtighten the eyebolts, the tapped holes may be damaged.

■ Installation Precautions

⚠ CAUTION

- Install the Servomotor or SERVOPACK in a way that will support the mass given in technical documents.
- Install SERVOPACKs, Servomotors, regenerative resistors, and External Dynamic Brake Resistors on nonflammable materials.
  Installation directly onto or near flammable materials may result in fire.
- Provide the specified clearances between the SERVOPACK and the control panel as well as with other devices.
  There is a risk of fire or failure.
- Install the SERVOPACK in the specified orientation.
  There is a risk of fire or failure.
- Do not step on or place a heavy object on the product.
  There is a risk of failure, damage, or injury.
- Do not allow any foreign matter to enter the SERVOPACK or Servomotor.
  There is a risk of failure or fire.

NOTICE

- Do not install or store the product in any of the following locations.
  - Locations that are subject to direct sunlight
  - Locations that are subject to ambient temperatures that exceed product specifications
  - Locations that are subject to relative humidities that exceed product specifications
  - Locations that are subject to condensation as the result of extreme changes in temperature
  - Locations that are subject to corrosive or flammable gases
  - Locations that are near flammable materials
  - Locations that are subject to dust, salts, or iron powder
  - Locations that are subject to water, oil, or chemicals
  - Locations that are subject to vibration or shock that exceeds product specifications
  - Locations that are subject to radiation

  If you store or install the product in any of the above locations, the product may fail or be damaged.
- Use the product in an environment that is appropriate for the product specifications.
  If you use the product in an environment that exceeds product specifications, the product may fail or be damaged.
- A SERVOPACK or Servomotor is a precision device. Do not drop it or subject it to strong shock.
  There is a risk of failure or damage.
- Always install a SERVOPACK in a control panel.
- Do not allow any foreign matter to enter a SERVOPACK or a Servomotor with a Cooling Fan and do not cover the outlet from the Servomotor's cooling fan.
  There is a risk of failure.

■ Wiring Precautions

⚠ DANGER

- Do not change any wiring while power is being supplied.
  There is a risk of electric shock or injury.

⚠ WARNING

- Wiring and inspections must be performed only by qualified engineers.
  There is a risk of electric shock or product failure.
- Check all wiring and power supplies carefully.
  Incorrect wiring or incorrect voltage application to the output circuits may cause short-circuit failures. If a short-circuit failure occurs as a result of any of these causes, the holding brake will not work. This could damage the machine or cause an accident that may result in death or injury.
- Connect the AC and DC power supplies to the specified SERVOPACK terminals.
  - Connect an AC power supply to the L1, L2, and L3 terminals and the L1C and L2C terminals on the SERVOPACK.
  - Connect a DC power supply to the B1/⊕ and ⊖2 terminals and the L1C and L2C terminals on the SERVOPACK.

  There is a risk of failure or fire.
- If you use a SERVOPACK with the Dynamic Brake Hardware Option, connect an External Dynamic Brake Resistor that is suitable for the machine and equipment specifications to the specified terminals.
  There is a risk of unexpected operation, machine damage, burning, or injury when an emergency stop is performed.

⚠ CAUTION

- Wait for at least six minutes after turning OFF the power supply (with a SERVOPACK for a 100-VAC input, wait for at least nine minutes) and then make sure that the CHARGE indicator is not lit before starting wiring or inspection work. Do not touch the power supply terminals while the CHARGE lamp is lit after turning OFF the power supply because high voltage may still remain in the SERVOPACK.
  There is a risk of electric shock.
- Observe the precautions and instructions for wiring and trial operation precisely as described in this document.
  Failures caused by incorrect wiring or incorrect voltage application in the brake circuit may cause the SERVOPACK to fail, damage the equipment, or cause an accident resulting in death or injury.
- Check the wiring to be sure it has been performed correctly.
  Connectors and pin layouts are sometimes different for different models. Always confirm the pin layouts in technical documents for your model before operation.
  There is a risk of failure or malfunction.
- Connect wires to power supply terminals and motor connection terminals securely with the specified methods and tightening torque.
  Insufficient tightening may cause wires and terminal blocks to generate heat due to faulty contact, possibly resulting in fire.
- Use shielded twisted-pair cables or screened unshielded multi-twisted-pair cables for I/O Signal Cables and Encoder Cables.
- The maximum wiring length is 3 m for I/O Signal Cables, and 50 m for Encoder Cables or Servomotor Main Circuit Cables.
- Observe the following precautions when wiring the SERVOPACK's main circuit terminals.
  - Turn ON the power supply to the SERVOPACK only after all wiring, including the main circuit terminals, has been completed.
  - If a connector is used for the main circuit terminals, remove the main circuit connector from the SERVOPACK before you wire it.
  - Insert only one wire per insertion hole in the main circuit terminals.
  - When you insert a wire, make sure that the conductor wire (e.g., whiskers) does not come into contact with adjacent wires.
- Install molded-case circuit breakers and other safety measures to provide protection against short circuits in external wiring.
  There is a risk of fire or failure.

NOTICE

- Whenever possible, use the Cables specified by Yaskawa.
  If you use any other cables, confirm the rated current and application environment of your model and use the wiring materials specified by Yaskawa or equivalent materials.
- Securely tighten cable connector screws and lock mechanisms.
  Insufficient tightening may result in cable connectors falling off during operation.
- Do not bundle power lines (e.g., the Main Circuit Cable) and low-current lines (e.g., the I/O Signal Cables or Encoder Cables) together or run them through the same duct. If you do not place power lines and low-current lines in separate ducts, separate them by at least 30 cm.
  If the cables are too close to each other, malfunctions may occur due to noise affecting the low-current lines.
- Install a battery at either the host controller or on the Encoder Cable.
  If you install batteries both at the host controller and on the Encoder Cable at the same time, you will create a loop circuit between the batteries, resulting in a risk of damage or burning.
- When connecting a battery, connect the polarity correctly.
  There is a risk of battery rupture or encoder failure.

■ Operation Precautions

⚠ WARNING

- Before starting operation with a machine connected, change the settings of the switches and parameters to match the machine.
  Unexpected machine operation, failure, or personal injury may occur if operation is started before appropriate settings are made.
- Do not radically change the settings of the parameters.
  There is a risk of unstable operation, machine damage, or injury.
- Install limit switches or stoppers at the ends of the moving parts of the machine to prevent unexpected accidents.
  There is a risk of machine damage or injury.
- For trial operation, securely mount the Servomotor and disconnect it from the machine.
  There is a risk of injury.
- Forcing the motor to stop for overtravel is disabled when the Jog, Origin Search, or Easy FFT utility function is executed. Take necessary precautions.
  There is a risk of machine damage or injury.
- When an alarm occurs, the Servomotor will coast to a stop or stop with the dynamic brake according to the SERVOPACK option specifications and settings. The coasting distance will change with the moment of inertia of the load and the resistance of the External Dynamic Brake Resistor. Check the coasting distance during trial operation and implement suitable safety measures on the machine.
- Do not enter the machine's range of motion during operation.
  There is a risk of injury.
- Do not touch the moving parts of the Servomotor or machine during operation.
  There is a risk of injury.

⚠ CAUTION

- Design the system to ensure safety even when problems, such as broken signal lines, occur. For example, the P-OT and N-OT signals are set in the default settings to operate on the safe side if a signal line breaks. Do not change the polarity of this type of signal.
- When overtravel occurs, the power supply to the motor is turned OFF and the brake is released. If you use the Servomotor to drive a vertical load, set the Servomotor to enter a zero-clamped state after the Servomotor stops. Also, install safety devices (such as an external brake or counterweight) to prevent the moving parts of the machine from falling.
- Always turn OFF the servo before you turn OFF the power supply. If you turn OFF the main circuit power supply or control power supply during operation before you turn OFF the servo, the Servomotor will stop as follows:
  - If you turn OFF the main circuit power supply during operation without turning OFF the servo, the Servomotor will stop abruptly with the dynamic brake.
  - If you turn OFF the control power supply without turning OFF the servo, the stopping method that is used by the Servomotor depends on the model of the SERVOPACK. For details, refer to the manual for the SERVOPACK.
  - If you use a SERVOPACK with the Dynamic Brake Hardware Option, the Servomotor stopping methods will be different from the stopping methods used without the Option or with other Hardware Options. For details, refer to the following manual.
    📖 Σ-7-Series Σ-7S/Σ-7W SERVOPACK with Dynamic Brake Hardware Option Specifications Product Manual (Manual No.: SIEP S800001 73)
- Do not use the dynamic brake for any application other than an emergency stop.
  There is a risk of failure due to rapid deterioration of elements in the SERVOPACK and the risk of unexpected operation, machine damage, burning, or injury.

NOTICE

- When you adjust the gain during system commissioning, use a measuring instrument to monitor the torque waveform and speed waveform and confirm that there is no vibration.
  If a high gain causes vibration, the Servomotor will be damaged quickly.
- Do not frequently turn the power supply ON and OFF. After you have started actual operation, allow at least one hour between turning the power supply ON and OFF (as a guideline).
  Do not use the product in applications that require the power supply to be turned ON and OFF frequently.
  The elements in the SERVOPACK will deteriorate quickly.
- An alarm or warning may occur if communications are performed with the host controller while the SigmaWin+ or Digital Operator is operating.
  If an alarm or warning occurs, it may interrupt the current process and stop the system.
- After you complete trial operation of the machine and facilities, use the SigmaWin+ to back up the settings of the SERVOPACK parameters. You can use them to reset the parameters after SERVOPACK replacement.
  If you do not copy backed up parameter settings, normal operation may not be possible after a faulty SERVOPACK is replaced, possibly resulting in machine or equipment damage.

■ Maintenance and Inspection Precautions

⚠ DANGER

- Do not change any wiring while power is being supplied.
  There is a risk of electric shock or injury.

⚠ WARNING

- Wiring and inspections must be performed only by qualified engineers.
  There is a risk of electric shock or product failure.

⚠ CAUTION

- Wait for at least six minutes after turning OFF the power supply (with a SERVOPACK for a 100-VAC input, wait for at least nine minutes) and then make sure that the CHARGE indicator is not lit before starting wiring or inspection work. Do not touch the power supply terminals while the CHARGE lamp is lit after turning OFF the power supply because high voltage may still remain in the SERVOPACK.
  There is a risk of electric shock.
- Before you replace a SERVOPACK, back up the settings of the SERVOPACK parameters. Copy the backed up parameter settings to the new SERVOPACK and confirm that they were copied correctly.
  If you do not copy backed up parameter settings or if the copy operation is not completed normally, normal operation may not be possible, possibly resulting in machine or equipment damage.

NOTICE

- Discharge all static electricity from your body before you operate any of the buttons or switches inside the front cover of the SERVOPACK.
  There is a risk of equipment damage.

■ Troubleshooting Precautions

⚠ DANGER

- If the safety device (molded-case circuit breaker or fuse) installed in the power supply line operates, remove the cause before you supply power to the SERVOPACK again. If necessary, repair or replace the SERVOPACK, check the wiring, and remove the factor that caused the safety device to operate.
  There is a risk of fire, electric shock, or injury.

⚠ WARNING

- The product may suddenly start to operate when the power supply is recovered after a momentary power interruption. Design the machine to ensure human safety when operation restarts.
  There is a risk of injury.

⚠ CAUTION

- When an alarm occurs, remove the cause of the alarm and ensure safety. Then reset the alarm or turn the power supply OFF and ON again to restart operation.
  There is a risk of injury or machine damage.
- If the Servo ON signal is input to the SERVOPACK and an alarm is reset, the Servomotor may suddenly restart operation. Confirm that the servo is OFF and ensure safety before you reset an alarm.
  There is a risk of injury or machine damage.
- Always insert a magnetic contactor in the line between the main circuit power supply and the main circuit power supply terminals on the SERVOPACK so that the power supply can be shut OFF at the main circuit power supply.
  If a magnetic contactor is not connected when the SERVOPACK fails, a large current may flow, possibly resulting in fire.
- If an alarm occurs, shut OFF the main circuit power supply.
  There is a risk of fire due to a regenerative resistor overheating as the result of regenerative transistor failure.
- Install a ground fault detector against overloads and short-circuiting or install a molded-case circuit breaker combined with a ground fault detector.
  There is a risk of SERVOPACK failure or fire if a ground fault occurs.
- The holding brake on a Servomotor will not ensure safety if there is the possibility that an external force (including gravity) may move the current position and create a hazardous situation when power is interrupted or an error occurs. If an external force may cause movement, install an external braking mechanism that ensures safety.

■ Disposal Precautions

- When disposing of the product, treat it as ordinary industrial waste. However, local ordinances and national laws must be observed. Implement all labeling and warnings as a final product as required.

■ General Precautions

- Figures provided in this document are typical examples or conceptual representations. There may be differences between them and actual wiring, circuits, and products.
- The products shown in illustrations in this document are sometimes shown without covers or protective guards. Always replace all covers and protective guards before you use the product.
- If you need a new copy of this document because it has been lost or damaged, contact your nearest Yaskawa representative or one of the offices listed on the back of this document.
- This document is subject to change without notice for product improvements, specifications changes, and improvements to the manual itself.
  We will update the document number of the document and issue revisions when changes are made.
- Any and all quality guarantees provided by Yaskawa are null and void if the customer modifies the product in any way. Yaskawa disavows any responsibility for damages or losses that are caused by modified products.

Warranty

◆ Details of Warranty

■ Warranty Period

The warranty period for a product that was purchased (hereinafter called the “delivered product”) is one year from the time of delivery to the location specified by the customer or 18 months from the time of shipment from the Yaskawa factory, whichever is sooner.

■ Warranty Scope

Yaskawa shall replace or repair a defective product free of charge if a defect attributable to Yaskawa occurs during the above warranty period.
This warranty does not cover defects caused by the delivered product reaching the end of its service life and replacement of parts that require replacement or that have a limited service life.

This warranty does not cover failures that result from any of the following causes.

- Improper handling, abuse, or use in unsuitable conditions or in environments not described in product catalogs or manuals, or in any separately agreed-upon specifications
- Causes not attributable to the delivered product itself
- Modifications or repairs not performed by Yaskawa
- Use of the delivered product in a manner in which it was not originally intended
- Causes that were not foreseeable with the scientific and technological understanding at the time of shipment from Yaskawa
- Events for which Yaskawa is not responsible, such as natural or human-made disasters

◆ Limitations of Liability

- Yaskawa shall in no event be responsible for any damage or loss of opportunity to the customer that arises due to failure of the delivered product.
- Yaskawa shall not be responsible for any programs (including parameter settings) or the results of program execution of the programs provided by the user or by a third party for use with programmable Yaskawa products.
- The information described in product catalogs or manuals is provided for the purpose of the customer purchasing the appropriate product for the intended application. The use thereof does not guarantee that there are no infringements of intellectual property rights or other proprietary rights of Yaskawa or third parties, nor does it construe a license.
- Yaskawa shall not be responsible for any damage arising from infringements of intellectual property rights or other proprietary rights of third parties as a result of using the information described in catalogs or manuals.

◆ Suitability for Use

- It is the customer's responsibility to confirm conformity with any standards, codes, or regulations that apply if the Yaskawa product is used in combination with any other products.
- The customer must confirm that the Yaskawa product is suitable for the systems, machines, and equipment used by the customer.
- Consult with Yaskawa to determine whether use in the following applications is acceptable. If use in the application is acceptable, use the product with extra allowance in ratings and specifications, and provide safety measures to minimize hazards in the event of failure.
    - Outdoor use, use involving potential chemical contamination or electrical interference, or use in conditions or environments not described in product catalogs or manuals
    - Nuclear energy control systems, combustion systems, railroad systems, aviation systems, vehicle systems, medical equipment, amusement machines, and installations subject to separate industry or government regulations
    - Systems, machines, and equipment that may present a risk to life or property
    - Systems that require a high degree of reliability, such as systems that supply gas, water, or electricity, or systems that operate continuously 24 hours a day
    - Other systems that require a similar high degree of safety
- Never use the product for an application involving serious risk to life or property without first ensuring that the system is designed to secure the required level of safety with risk warnings and redundancy, and that the Yaskawa product is properly rated and installed.
- The circuit examples and other application examples described in product catalogs and manuals are for reference. Check the functionality and safety of the actual devices and equipment to be used before using the product.
- Read and understand all use prohibitions and precautions, and operate the Yaskawa product correctly to prevent accidental harm to third parties.

◆ Specifications Change

The names, specifications, appearance, and accessories of products in product catalogs and manuals may be changed at any time based on improvements and other reasons. The next editions of the revised catalogs or manuals will be published with updated code numbers. Consult with your Yaskawa representative to confirm the actual specifications before purchasing a product.

Compliance with UL Standards, EU Directives, and Other Safety Standards

Certification marks for the standards for which the product has been certified by certification bodies are shown on nameplate. Products that do not have the marks are not certified for the standards.

◆ North American Safety Standards (UL)

Product	Model	North American Safety Standards (UL File No.)
SERVOPACKs	SGD7S	UL 61800-5-1 (E147823), CSA C22.2 No.274
Rotary Servomotors	• SGM7M • SGM7A • SGM7J • SGM7P • SGM7G • SGMMV	UL 1004-1 UL 1004-6 (E165827)
Direct Drive Servomotors	• SGM7E • SGM7F-□□A, -□□B, -□□C, and -□□D (Small-Capacity Servomotors with Cores) • SGMCV • SGMCS-□□B, -□□C, -□□D, and -□□E (Small-Capacity, Coreless Servomotors)	UL 1004-1 UL 1004-6 (E165827)
Linear Servomotors	• SGLGW* • SGLFW* • SGLFW2 • SGLTW*	UL 1004-1 UL 1004-6 (E165827)

* Only products with derating specifications are in compliance with the UL Standards. Estimates are available for those products. Contact your Yaskawa representative for details.

◆ EU Directives

Product	Model	EU Directive	Harmonized Standards
SERVOPACKs	SGD7S	Machinery Directive 2006/42/EC	EN ISO13849-1: 2015
		EMC Directive 2014/30/EU	EN 55011 group 1, class A EN 61000-6-2 EN 61000-6-4 EN 61800-3 (Category C2, Second environment)
		Low Voltage Directive 2014/35/EU	EN 50178 EN 61800-5-1
		RoHS Directive 2011/65/EU	EN 50581
Rotary Servomotors	SGMMV	EMC Directive 2004/108/EC	EN 55011 group 1, class A EN 61000-6-2 EN 61800-3 (Category C2, Second environment)
		Low Voltage Directive 2006/95/EC	EN 60034-1 EN 60034-5
		RoHS Directive 2011/65/EU	EN 50581
	• SGM7M • SGM7J • SGM7A • SGM7P • SGM7G	EMC Directive 2014/30/EU	EN 55011 group 1, class A EN 61000-6-2 EN 61000-6-4 EN 61800-3 (Category C2, Second environment)
		Low Voltage Directive 2014/35/EU	EN 60034-1 EN 60034-5
		RoHS Directive 2011/65/EU	EN 50581
Direct Drive Servomotors	• SGM7E • SGM7F • SGMCV • SGMCS-□□B, -□□C, -□□D, and -□□E (Small-Capacity, Coreless Servomotors)	EMC Directive 2014/30/EU	EN 55011 group 1, class A EN 61000-6-2 EN 61000-6-4 EN 61800-3 (Category C2, Second environment)
		Low Voltage Directive 2014/35/EU	EN 60034-1 EN 60034-5
		RoHS Directive 2011/65/EU	EN 50581
Linear Servomotors	• SGLG* • SGLF* • SGLF□2 • SGLT*	EMC Directive 2014/30/EU	EN 55011 group 1, class A EN 61000-6-2 EN 61000-6-4 EN 61800-3 (Category C2, Second environment)
		Low Voltage Directive 2014/35/EU	EN 60034-1
		RoHS Directive 2011/65/EU	EN 50581

* For Moving Coils, only models with “-E” at the end of model numbers are certified.

Note: 1. We declared the CE Marking based on the harmonized standards in the above table.
2. These products are for industrial use. In home environments, these products may cause electromagnetic interference and additional noise reduction measures may be necessary.

◆ Safety Standards

Product	Model	Safety Standards	Standards
SERVOPACKs	SGD7S	Safety of Machinery	EN ISO13849-1: 2015 IEC 60204-1
		Functional Safety	IEC 61508 series IEC 62061 IEC 61800-5-2
		EMC	IEC 61326-3-1

■ Safety Parameters

Item	Standards	Performance Level	
Safety Integrity Level	IEC 61508	SIL3	
	IEC 62061	SILCL3	
Mission Time	IEC 61508	10 years	20 years
Probability of Dangerous Failure per Hour	IEC 61508 IEC 62061	PFH = 4.04×10^{-9} [1/h] (4.04% of SIL3)	PFH = 4.05×10^{-9} [1/h] (4.05% of SIL3)
Performance Level	EN ISO 13849-1	PLe (Category 3)	
Mean Time to Dangerous Failure of Each Channel	EN ISO 13849-1	MTTFd: High	
Average Diagnostic Coverage	EN ISO 13849-1	DCavg: Medium	
Stop Category	IEC 60204-1	Stop category 0	
Safety Function	IEC 61800-5-2	STO	
Hardware Fault Tolerance	IEC 61508	HFT = 1	
Subsystem	IEC 61508	B	

Contents

About this Manual iii
Outline of Manual iii
Related Documents iv
Using This Manual x
Safety Precautions xiii
Warranty xxiii
Compliance with UL Standards, EU Directives, and Other Safety Standards . . . xxv

1 Basic Information on SERVOPACKs

1.1 The Σ-7 Series 1-2

1.2 Interpreting the Nameplate 1-3

1.3 Part Names 1-4

1.4 Model Designations 1-5
1.4.1 Interpreting SERVOPACK Model Numbers 1-5
1.4.2 Interpreting Servomotor Model Numbers 1-6

1.5 Combinations of SERVOPACKs and Servomotors 1-8
1.5.1 Combinations of Rotary Servomotors and SERVOPACKs 1-8
1.5.2 Combinations of Direct Drive Servomotors and SERVOPACKs 1-9
1.5.3 Combinations of Linear Servomotors and SERVOPACKs 1-10

1.6 EtherCAT Communications Indicators 1-12
1.6.1 RUN 1-12
1.6.2 ERR 1-13
1.6.3 Link/Activity 1-13

1.7 Functions 1-14

2 Selecting a SERVOPACK

2.1 Ratings and Specifications 2-2
2.1.1 Ratings 2-2
2.1.2 SERVOPACK Overload Protection Characteristics 2-5
2.1.3 Specifications 2-6

2.2 Block Diagrams 2-9
2.2.1 SGD7S-R70A, -R90A, and -1R6A 2-9
2.2.2 SGD7S-2R8A 2-9
2.2.3 SGD7S-3R8A, -5R5A, and -7R6A 2-10
2.2.4 SGD7S-120A 2-10
2.2.5 SGD7S-180A and -200A 2-12
2.2.6 SGD7S-330A 2-13
2.2.7 SGD7S-470A and -550A 2-14
2.2.8 SGD7S-590A and -780A 2-15
2.2.9 SGD7S-R70F, -R90F, and -2R1F 2-15
2.2.10 SGD7S-2R8F 2-16

2.3 External Dimensions 2-17
2.3.1 Front Cover Dimensions and Connector Specifications 2-17
2.3.2 SERVOPACK External Dimensions 2-18
2.4 Examples of Standard Connections between SERVOPACKs and Peripheral Devices . . 2-24

3 SERVOPACK Installation

3.1 Installation Precautions 3-2
3.2 Mounting Types and Orientation 3-3
3.3 Mounting Hole Dimensions 3-4
3.4 Mounting Interval 3-6
3.4.1 Installing One SERVOPACK in a Control Panel 3-6
3.4.2 Installing More Than One SERVOPACK in a Control Panel 3-6
3.5 Monitoring the Installation Environment 3-7
3.6 Derating Specifications 3-8
3.7 EMC Installation Conditions 3-9

4 Wiring and Connecting SERVOPACKs

4.1 Wiring and Connecting SERVOPACKs 4-3
4.1.1 General Precautions 4-3
4.1.2 Countermeasures against Noise 4-5
4.1.3 Grounding 4-8
4.2 Basic Wiring Diagrams 4-9
4.3 Wiring the Power Supply to the SERVOPACK 4-11
4.3.1 Terminal Symbols and Terminal Names 4-11
4.3.2 Wiring Procedure for Main Circuit Connector 4-13
4.3.3 Power ON Sequence 4-14
4.3.4 Power Supply Wiring Diagrams 4-16
4.3.5 Wiring Regenerative Resistors 4-22
4.3.6 Wiring Reactors for Harmonic Suppression 4-24
4.4 Wiring Servomotors 4-25
4.4.1 Terminal Symbols and Terminal Names 4-25
4.4.2 Pin Arrangement of Encoder Connector (CN2) 4-25
4.4.3 Wiring the SERVOPACK to the Encoder 4-26
4.4.4 Wiring the SERVOPACK to the Holding Brake 4-33
4.5 I/O Signal Connections 4-34
4.5.1 I/O Signal Connector (CN1) Names and Functions 4-34
4.5.2 I/O Signal Connector (CN1) Pin Arrangement 4-36
4.5.3 I/O Signal Wiring Examples 4-37
4.5.4 I/O Circuits 4-39

4.6 Connecting Safety Function Signals 4-41
4.6.1 Pin Arrangement of Safety Function Signals (CN8) 4-41
4.6.2 I/O Circuits 4-41

4.7 Connecting MECHATROLINK-III Communications Cables (RJ-45) . . 4-43

4.8 Connecting the Other Connectors 4-44
4.8.1 Serial Communications Connector (CN502) 4-44
4.8.2 Computer Connector (CN7) 4-44
4.8.3 Analog Monitor Connector (CN5) 4-45

5 Basic Functions That Require Setting before Operation

5.1 Manipulating Parameters (Pn□□□) 5-4
5.1.1 Parameter Classification 5-4
5.1.2 Notation for Parameters 5-5
5.1.3 Parameter Setting Methods 5-6
5.1.4 Write Prohibition Setting for Parameters 5-8
5.1.5 Initializing Parameter Settings 5-11

5.2 MECHATROLINK-III Communications Settings 5-13
5.2.1 Communications Settings 5-13
5.2.2 Setting the Station Address 5-13

5.3 Power Supply Type Settings for the Main Circuit and Control Circuit . . 5-14
5.3.1 AC Power Supply Input/DC Power Supply Input Setting 5-14
5.3.2 Single-phase AC Power Supply Input/
Three-phase AC Power Supply Input Setting 5-15

5.4 Automatic Detection of Connected Motor 5-16

5.5 Motor Direction Setting 5-17

5.6 Setting the Linear Encoder Pitch 5-18

5.7 Writing Linear Servomotor Parameters 5-19

5.8 Selecting the Phase Sequence for a Linear Servomotor 5-23

5.9 Polarity Sensor Setting 5-25

5.10 Polarity Detection 5-26
5.10.1 Restrictions 5-26
5.10.2 Using the SV_ON (Servo ON) Command to Perform Polarity Detection . . . 5-27
5.10.3 Using a Tool Function to Perform Polarity Detection 5-28

5.11 Overtravel and Related Settings 5-29
5.11.1 Overtravel Signals 5-30
5.11.2 Setting to Enable/Disable Overtravel 5-30
5.11.3 Motor Stopping Method for Overtravel 5-31
5.11.4 Overtravel Warnings 5-32

5.12 Holding Brake 5-34
5.12.1 Brake Operating Sequence 5-34
5.12.2 /BK (Brake) Signal 5-35
5.12.3 Output Timing of /BK (Brake) Signal When the Servomotor Is Stopped . . . 5-36
5.12.4 Output Timing of /BK (Brake) Signal When the Servomotor Is Operating . . 5-37

5.13 Motor Stopping Methods for Servo OFF and Alarms 5-39
5.13.1 Stopping Method for Servo OFF 5-40
5.13.2 Servomotor Stopping Method for Alarms 5-40

5.14 Motor Overload Detection Level 5-42
5.14.1 Detection Timing for Overload Warnings (A.910) 5-42
5.14.2 Detection Timing for Overload Alarms (A.720) 5-43

5.15 Electronic Gear Settings 5-44
5.15.1 Electronic Gear Ratio Settings 5-45
5.15.2 Electronic Gear Ratio Setting Examples 5-49

5.16 Resetting the Absolute Encoder 5-50
5.16.1 Precautions on Resetting 5-50
5.16.2 Preparations 5-50
5.16.3 Applicable Tools 5-51
5.16.4 Operating Procedure 5-51

5.17 Setting the Origin of the Absolute Encoder 5-53
5.17.1 Absolute Encoder Origin Offset 5-53
5.17.2 Setting the Origin of the Absolute Linear Encoder 5-53

5.18 Setting the Regenerative Resistor Capacity 5-56

5.19 Σ-V Compatible Function and Settings 5-57
5.19.1 Setting the Communications Interface Compatibility Selection 5-57
5.19.2 Setting the Encoder Resolution Compatibility Selection 5-58

6 Application Functions

6.1 I/O Signal Allocations 6-4
6.1.1 Input Signal Allocations 6-4
6.1.2 Output Signal Allocations 6-5
6.1.3 ALM (Servo Alarm) Signal 6-8
6.1.4 /WARN (Warning) Signal 6-8
6.1.5 /TGON (Rotation Detection) Signal 6-9
6.1.6 /S-RDY (Servo Ready) Signal 6-10
6.1.7 /V-CMP (Speed Coincidence Detection) Signal 6-11
6.1.8 /COIN (Positioning Completion) Signal 6-12
6.1.9 /NEAR (Near) Signal 6-13
6.1.10 Speed Limit during Torque Control 6-14

6.2 Operation for Momentary Power Interruptions 6-16

6.3 SEMI F47 Function 6-17

6.4 Setting the Motor Maximum Speed 6-19

6.5 Encoder Divided Pulse Output 6-20
6.5.1 Encoder Divided Pulse Output Signals 6-20
6.5.2 Setting for the Encoder Divided Pulse Output 6-25

6.6 Software Limits. 6-27
6.6.1 Setting to Enable/Disable Software Limits 6-27
6.6.2 Setting the Software Limits. 6-27
6.6.3 Software Limit Check for References 6-27

6.7 Selecting Torque Limits 6-28
6.7.1 Internal Torque Limits 6-28
6.7.2 External Torque Limits 6-29
6.7.3 /CLT (Torque Limit Detection) Signal. 6-32

6.8 Absolute Encoders 6-33
6.8.1 Connecting an Absolute Encoder 6-34
6.8.2 Structure of the Position Data of the Absolute Encoder 6-34
6.8.3 Output Ports for the Position Data from the Absolute Encoder. 6-35
6.8.4 Reading the Position Data from the Absolute Encoder 6-36
6.8.5 Transmission Specifications 6-37
6.8.6 Calculating the Current Position in Machine Coordinates 6-37
6.8.7 Alarm Output from Output Ports for the Position Data from the Absolute Encoder 6-38
6.8.8 Multiturn Limit Setting 6-39
6.8.9 Multiturn Limit Disagreement Alarm (A.CC0). 6-40

6.9 Absolute Linear Encoders 6-43
6.9.1 Connecting an Absolute Linear Encoder. 6-43
6.9.2 Structure of the Position Data of the Absolute Linear Encoder 6-43
6.9.3 Output Ports for the Position Data from the Absolute Linear Encoder 6-44
6.9.4 Reading the Position Data from the Absolute Linear Encoder. 6-44
6.9.5 Transmission Specifications 6-45
6.9.6 Calculating the Current Position in Machine Coordinates 6-46
6.9.7 Alarm Output from the Output Ports for the Position Data from the Absolute Linear Encoder 6-47

6.10 Software Reset 6-48
6.10.1 Preparations 6-48
6.10.2 Applicable Tools 6-48
6.10.3 Operating Procedure 6-48

6.11 Initializing the Vibration Detection Level 6-51
6.11.1 Preparations 6-51
6.11.2 Applicable Tools 6-52
6.11.3 Operating Procedure 6-52
6.11.4 Related Parameters 6-54

6.12 Adjusting the Motor Current Detection Signal Offset 6-55
6.12.1 Automatic Adjustment 6-55
6.12.2 Manual Adjustment. 6-57

6.13 Forcing the Motor to Stop 6-59
6.13.1 FSTP (Forced Stop Input) Signal 6-59
6.13.2 Stopping Method Selection for Forced Stops. 6-59
6.13.3 Resetting Method for Forced Stops 6-61

6.14 Overheat Protection 6-62
6.14.1 Connecting the Overheat Protection Input (TH) Signal 6-62
6.14.2 Overheat Protection Selection 6-63

7 Trial Operation and Actual Operation

7.1 Flow of Trial Operation 7-2
7.1.1 Flow of Trial Operation for Rotary Servomotors 7-2
7.1.2 Flow of Trial Operation for Linear Servomotors 7-3
7.2 Inspections and Confirmations before Trial Operation 7-6
7.3 Trial Operation for the Servomotor without a Load 7-7
7.3.1 Preparations 7-7
7.3.2 Applicable Tools 7-8
7.3.3 Operating Procedure 7-8
7.4 Trial Operation with MECHATROLINK-III Communications . . . 7-10
7.5 Trial Operation with the Servomotor Connected to the Machine . . 7-12
7.5.1 Precautions 7-12
7.5.2 Preparations 7-12
7.5.3 Operating Procedure 7-13
7.6 Convenient Function to Use during Trial Operation 7-14
7.6.1 Program Jogging 7-14
7.6.2 Origin Search 7-19
7.6.3 Test without a Motor 7-21
7.7 Operation Using MECHATROLINK-III Commands 7-26

8 Tuning

8.1 Overview and Flow of Tuning 8-4
8.1.1 Tuning Functions 8-5
8.1.2 Diagnostic Tool 8-6
8.2 Monitoring Methods 8-7
8.3 Precautions to Ensure Safe Tuning 8-8
8.3.1 Overtravel Settings 8-8
8.3.2 Torque Limit Settings 8-8
8.3.3 Setting the Position Deviation Overflow Alarm Level 8-8
8.3.4 Vibration Detection Level Setting 8-10
8.3.5 Setting the Position Deviation Overflow Alarm Level at Servo ON 8-10
8.4 Tuning-less Function 8-12
8.4.1 Application Restrictions 8-12
8.4.2 Operating Procedure 8-13
8.4.3 Troubleshooting Alarms 8-14
8.4.4 Parameters Disabled by Tuning-less Function 8-15
8.4.5 Automatically Adjusted Function Setting 8-15
8.4.6 Related Parameters 8-15

8.5 Estimating the Moment of Inertia 8-16
8.5.1 Outline 8-16
8.5.2 Restrictions 8-16
8.5.3 Applicable Tools 8-17
8.5.4 Operating Procedure 8-17

8.6 Autotuning without Host Reference 8-24
8.6.1 Outline 8-24
8.6.2 Restrictions 8-25
8.6.3 Applicable Tools 8-26
8.6.4 Operating Procedure 8-26
8.6.5 Troubleshooting Problems in Autotuning without a Host Reference 8-30
8.6.6 Automatically Adjusted Function Settings 8-32
8.6.7 Related Parameters 8-34

8.7 Autotuning with a Host Reference 8-35
8.7.1 Outline 8-35
8.7.2 Restrictions 8-36
8.7.3 Applicable Tools 8-36
8.7.4 Operating Procedure 8-37
8.7.5 Troubleshooting Problems in Autotuning with a Host Reference 8-40
8.7.6 Automatically Adjusted Function Settings 8-41
8.7.7 Related Parameters 8-41

8.8 Custom Tuning 8-42
8.8.1 Outline 8-42
8.8.2 Preparations 8-42
8.8.3 Applicable Tools 8-43
8.8.4 Operating Procedure 8-43
8.8.5 Automatically Adjusted Function Settings 8-48
8.8.6 Tuning Example for Tuning Mode 2 or 3 8-49
8.8.7 Related Parameters 8-50

8.9 Anti-Resonance Control Adjustment 8-51
8.9.1 Outline 8-51
8.9.2 Preparations 8-51
8.9.3 Applicable Tools 8-52
8.9.4 Operating Procedure 8-52
8.9.5 Related Parameters 8-54
8.9.6 Suppressing Different Vibration Frequencies with Anti-resonance Control 8-54

8.10 Vibration Suppression 8-56
8.10.1 Outline 8-56
8.10.2 Preparations 8-57
8.10.3 Applicable Tools 8-57
8.10.4 Operating Procedure 8-57
8.10.5 Setting Combined Functions 8-59
8.10.6 Related Parameters 8-59

8.11 Speed Ripple Compensation 8-60
8.11.1 Outline 8-60
8.11.2 Setting Up Speed Ripple Compensation 8-60
8.11.3 Setting Parameters 8-64

8.12 Additional Adjustment Functions 8-66
8.12.1 Gain Switching 8-66
8.12.2 Friction Compensation 8-70
8.12.3 Gravity Compensation 8-72
8.12.4 Current Control Mode Selection 8-73
8.12.5 Current Gain Level Setting 8-74
8.12.6 Speed Detection Method Selection 8-74
8.12.7 Speed Feedback Filter 8-74
8.12.8 Backlash Compensation 8-75

8.13 Manual Tuning 8-81
8.13.1 Tuning the Servo Gains 8-81
8.13.2 Compatible Adjustment Functions 8-91

8.14 Diagnostic Tools 8-95
8.14.1 Mechanical Analysis 8-95
8.14.2 Easy FFT 8-97

9 Monitoring

9.1 Monitoring Product Information 9-2
9.1.1 Items That You Can Monitor 9-2
9.1.2 Operating Procedures 9-2

9.2 Monitoring SERVOPACK Status 9-3
9.2.1 Servo Drive Status 9-3
9.2.2 Monitoring Operation, Status, and I/O 9-3
9.2.3 I/O Signal Status Monitor 9-5

9.3 Monitoring Machine Operation Status and Signal Waveforms . . 9-7
9.3.1 Items That You Can Monitor 9-7
9.3.2 Using the SigmaWin+ 9-8
9.3.3 Using the Analog Monitors 9-9

9.4 Monitoring Product Life 9-15
9.4.1 Items That You Can Monitor 9-15
9.4.2 Operating Procedure 9-16
9.4.3 Preventative Maintenance 9-17

9.5 Alarm Tracing 9-18
9.5.1 Data for Which Alarm Tracing Is Performed 9-18
9.5.2 Applicable Tools 9-18

10 Fully-Closed Loop Control

10.1 Fully-Closed System 10-2

10.2 SERVOPACK Commissioning Procedure 10-3

10.3 Parameter Settings for Fully-Closed Loop Control 10-5
10.3.1 Control Block Diagram for Fully-Closed Loop Control 10-5
10.3.2 Setting the Motor Direction and the Machine Movement Direction 10-6
10.3.3 Setting the Number of External Encoder Scale Pitches 10-7
10.3.4 Setting the PAO, PBO, and PCO (Encoder Divided Pulse Output) Signals 10-7
10.3.5 External Absolute Encoder Data Reception Sequence 10-8
10.3.6 Electronic Gear Setting. 10-8
10.3.7 Alarm Detection Settings 10-8
10.3.8 Analog Monitor Signal Settings 10-9
10.3.9 Setting to Use an External Encoder for Speed Feedback 10-9

11 Safety Functions

11.1 Introduction to the Safety Functions 11-2
11.1.1 Safety Functions. 11-2
11.1.2 Precautions for Safety Functions 11-2

11.2 Hard Wire Base Block (HWBB). 11-3
11.2.1 Risk Assessment 11-3
11.2.2 Hard Wire Base Block (HWBB) State 11-4
11.2.3 Resetting the HWBB State 11-5
11.2.4 Related Commands 11-6
11.2.5 Detecting Errors in HWBB Signal 11-6
11.2.6 HWBB Input Signal Specifications 11-6
11.2.7 Operation without a Host Controller 11-7
11.2.8 /S-RDY (Servo Ready Output) Signal. 11-7
11.2.9 /BK (Brake Output) Signal. 11-8
11.2.10 Stopping Methods 11-8
11.2.11 ALM (Servo Alarm) Signal 11-8

11.3 EDM1 (External Device Monitor) 11-9
11.3.1 EDM1 Output Signal Specifications 11-9

11.4 Applications Examples for Safety Functions 11-10
11.4.1 Connection Example 11-10
11.4.2 Failure Detection Method 11-10
11.4.3 Procedure. 11-11

11.5 Validating Safety Functions 11-12

11.6 Connecting a Safety Function Device 11-13

12 Maintenance

12.1 Inspections and Part Replacement 12-2
12.1.1 Inspections. 12-2
12.1.2 Guidelines for Part Replacement 12-2
12.1.3 Replacing the Battery. 12-3

12.2 Alarm Displays 12-5
12.2.1 List of Alarms 12-5
12.2.2 Troubleshooting Alarms 12-11
12.2.3 Resetting Alarms 12-42
12.2.4 Displaying the Alarm History 12-43
12.2.5 Clearing the Alarm History 12-44
12.2.6 Resetting Alarms Detected in Option Modules 12-45
12.2.7 Resetting Motor Type Alarms 12-47

12.3 Warning Displays 12-49
12.3.1 List of Warnings 12-49
12.3.2 Troubleshooting Warnings 12-51

12.4 Monitoring Communications Data during Alarms or Warnings . . 12-58

12.5 Troubleshooting Based on the Operation and Conditions of the Servomotor . . 12-59

13 Parameter Lists

13.1 List of Servo Parameters 13-2
13.1.1 Interpreting the Parameter Lists 13-2
13.1.2 List of Servo Parameters 13-3

13.2 List of MECHATROLINK-III Common Parameters 13-43
13.2.1 Interpreting the Parameter Lists 13-43
13.2.2 List of MECHATROLINK-III Common Parameters 13-43

13.3 Parameter Recording Table 13-52

14 Appendices

14.1 Interpreting Panel Displays 14-2
14.1.1 Interpreting Status Displays 14-2
14.1.2 Alarm and Warning Displays 14-2
14.1.3 Hard Wire Base Block Active Display 14-2
14.1.4 Overtravel Display 14-2
14.1.5 Forced Stop Display 14-2

14.2 Corresponding SERVOPACK and SigmaWin+ Function Names 14-3
14.2.1 Corresponding SERVOPACK Utility Function Names 14-3
14.2.2 Corresponding SERVOPACK Monitor Display Function Names 14-5

Index

Revision History

Basic Information on SERVOPACKs

1

This chapter provides information required to select SERVOPACKs, such as SERVOPACK models and combinations with Servomotors.

1.1 The Σ-7 Series 1-2

1.2 Interpreting the Nameplate 1-3

1.3 Part Names 1-4

1.4 Model Designations 1-5

1.4.1 Interpreting SERVOPACK Model Numbers 1-5
1.4.2 Interpreting Servomotor Model Numbers 1-6

1.5 Combinations of SERVOPACKs and Servomotors . .1-8

1.5.1 Combinations of Rotary Servomotors and SERVOPACKs 1-8
1.5.2 Combinations of Direct Drive Servomotors and SERVOPACKs 1-9
1.5.3 Combinations of Linear Servomotors and SERVOPACKs 1-10

1.6 EtherCAT Communications Indicators . . . 1-12

1.6.1 RUN 1-12
1.6.2 ERR 1-13
1.6.3 Link/Activity 1-13

1.7 Functions 1-14

1.1 The Σ-7 Series

The Σ-7-series SERVOPACKs are designed for applications that require frequent high-speed and high-precision positioning. The SERVOPACK will make the most of machine performance in the shortest time possible, thus contributing to improving productivity.

The following three types of Σ-7-Series Servo Drives are available.

Type	Description
Σ-7S	Single-axis SERVOPACKs
Σ-7W	Two-axis SERVOPACKs
Σ-7C	Two-axis SERVOPACKs with Built-in Controllers

1.2 Interpreting the Nameplate

The following basic information is provided on the nameplate.

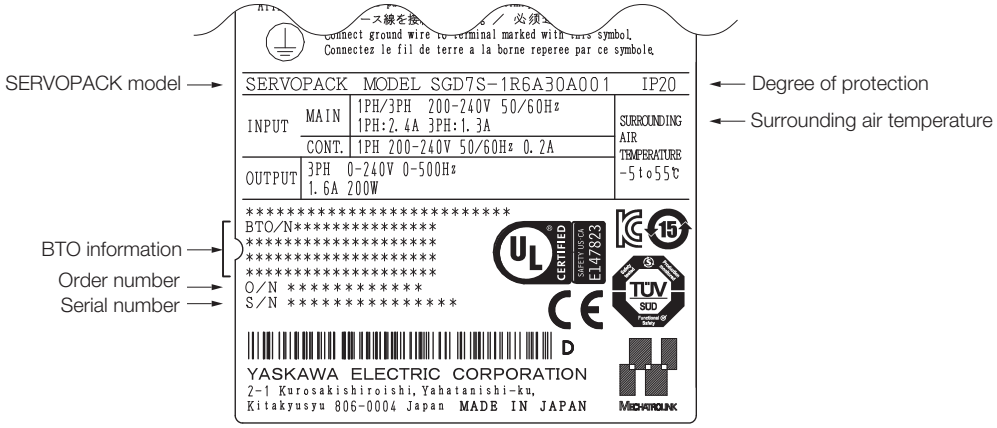

1.3 Part Names

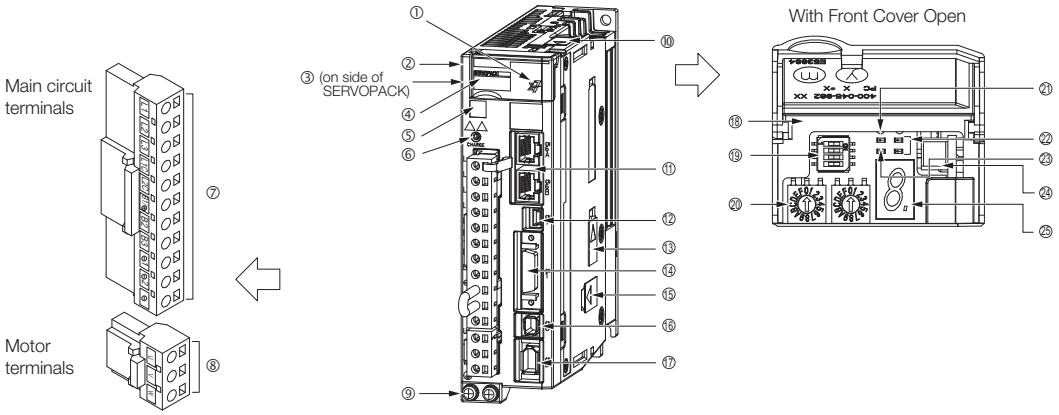

No.	Name	Description	Reference
①	Front Cover	–	–
②	Input Voltage	–	–
③	Nameplate	Indicates the SERVOPACK model and ratings.	page 1-3
④	Model	The model of the SERVOPACK.	page 1-5
⑤	QR Code	The QR code that is used by the MechatroCloud service.	–
⑥	CHARGE	Lit while the main circuit power is being supplied. Note: Even if you turn OFF the main circuit power supply, this indicator will be lit as long as the internal capacitor remains charged. Do not touch the main circuit or motor terminals while this indicator is lit. Doing so may result in electric shock.	–
⑦	Main Circuit Terminals	The terminals depend on the main circuit power supply input specifications of the SERVOPACK.	page 4-11
⑧	Servomotor Terminals (U, V, and W)	The connection terminals for the Servomotor Main Circuit Cable (power line).	page 4-25
⑨	Ground Terminal (⏚)	The ground terminals to prevent electric shock. Always connect this terminal.	–
⑩	Serial Communications Connector (CN502)	Connects to the Digital Operator. However, a Communications Unit (JUSP-JC001-1) is required to connect a Digital Operator.	page 4-44
⑪	MECHATROLINK-III Communications Connector (CN6A and CN6B)	Connects to MECHATROLINK-III-compatible devices.	page 4-43
⑫	Computer Connector (CN7)	A USB connector to connect a computer.	page 4-44
⑬	Safety Option Module Connector	Connects to a Safety Option Module.	–
⑭	I/O Signal Connector (CN1)	Connects to sequence I/O signals.	page 4-34
⑮	Feedback Option Module Connector	Connects to a Feedback Option Module.	–
⑯	Safety Connector (CN8)	Connects to a safety function device.	page 4-41
⑰	Encoder Connector (CN2)	• Rotary Servomotor: Connects to the encoder in the Servomotor. • Linear Servomotor: Connects to a Serial Converter Unit or linear encoder.	page 4-25
⑱	Serial Number	–	–
⑲	DIP Switch (S3)	Used to set MECHATROLINK-III communications.	page 5-13
⑳	Rotary Switches (S1 and S2)	Used to set the MECHATROLINK station address.	
㉑	PWR	Lights when the control power is being supplied.	–
㉒	L1, L2	Lights during MECHATROLINK communications.	–
㉓	CN	Lights when the SERVOPACK normally receives a CONNECT command.	–
㉔	Analog Monitor Connector (CN5)	You can use a special cable (peripheral device) to monitor the motor speed, torque reference, or other values.	page 4-45
㉕	Panel Display	Displays the servo status with a seven-segment display.	–

1.4 Model Designations

1.4.1 Interpreting SERVOPACK Model Numbers

SGD7S - R70 A 30 A 001

Σ-7-Series Σ-7S SERVOPACKs

1st+2nd+3rd digits | 4th digit | 5th+6th digits | 7th digit | 8th+9th+10th digits

1st+2nd+3rd digits Maximum Applicable Motor Capacity

Voltage	Code	Specification
Three-Phase, 200 VAC	R70*1	0.05 kW
	R90*1	0.1 kW
	1R6*1	0.2 kW
	2R8*1	0.4 kW
	3R8	0.5 kW
	5R5*1	0.75 kW
	7R6	1.0 kW
	120*2	1.5 kW
	180	2.0 kW
	200	3.0 kW
	330	5.0 kW
	470	6.0 kW
	550	7.5 kW
	590	11 kW
	780	15 kW
Single-Phase, 100 VAC	R70	0.05 kW
	R90	0.1 kW
	2R1	0.2 kW
	2R8	0.4 kW

4th digit Voltage

Code	Specification
A	200 VAC
F	100 VAC

5th+6th digits Interface*3

Code	Specification
30	MECHATROLINK-III communications references and RJ-45 connectors

7th digit Design Revision Order

A

8th+9th+10th digits Hardware Options Specification

Code	Specification	Applicable Models
None	Without options	All models
000		
001	Rack-mounted	SGD7S-R70A to -330A
		SGD7S-R70F to -2R8F
	Duct-ventilated	SGD7S-470A to -780A
002	Varnished	All models
008	Single-phase, 200-VAC power supply input	SGD7S-120A
020*4	No dynamic brake	SGD7S-R70A to -2R8A
		SGD7S-R70F to -2R8F
	External dynamic brake resistor	SGD7S-3R8A to -780A

11th+12th+13th digits FT/EX Specification

Code	Specification
None	None
000	

14th digit BTO Specification*5

Code	Specification
None	None
B	BTO specification

*1. You can use these models with either a single-phase or three-phase input.
*2. A model with a single-phase, 200-VAC power supply input is available as a hardware option (model: SGD7S-120A30A008).
*3. The same SERVOPACKs are used for both Rotary Servomotors and Linear Servomotors.
*4. Refer to the following manual for details.
Σ-7-Series Σ-7S/Σ-7W SERVOPACK with Dynamic Brake Hardware Option Specifications Product Manual (Manual No.: SIEP S800001 73)
*5. The BTO specification indicates if the SEVOPACK is customized by using the MechatroCloud BTO service. You need a BTO number to order SERVOPACKs with customized specifications.
Refer to the following catalog for details on the BTO specification.
AC Servo Drives Σ-7 Series (Manual No.: KAEP S800001 23)

1.4.2 Interpreting Servomotor Model Numbers

This section outlines the model numbers of Σ-7-series Servomotors. Refer to the relevant manual in the following list for details.

- Σ-7-Series Rotary Servomotor Product Manual (Manual No.: SIEP S800001 36)
- Σ-7-Series Linear Servomotor Product Manual (Manual No.: SIEP S800001 37)
- Σ-7-Series Direct Drive Servomotor Product Manual (Manual No.: SIEP S800001 38)

Rotary Servomotors

SGM□□ - 01 A F A 2 1

Series | 1st+2nd digits | 3rd digit | 4th digit | 5th digit | 6th digit | 7th digit

Series Σ-7 Series Servomotors

Code	Specification
SGM7M	Low inertia, ultra-small capacity
SGM7J	Medium inertia, high speed
SGM7A	Low inertia, high speed
SGM7P	Medium inertia, flat
SGM7G	Medium inertia, low speed, high torque
SGMMV	Low inertia, ultra-small capacity

1st+2nd digits Rated Output

3rd digit Power Supply Voltage

- 200 VAC

4th digit Serial Encoder Specification

- 17-bit absolute encoder
- 20-bit absolute encoder
- 24-bit batteryless absolute encoder
- 24-bit absolute encoder
- 24-bit incremental encoder

5th digit Design Revision Order

6th digit Shaft End Specification

- Straight
- With key and tap
- With two flat seats

7th digit Option Specification

- With 24-V holding brake
- With oil seal

Direct Drive Servomotors

SGM□□ - 02 B 3 C 1 1

Series | 1st+2nd digits | 3rd digit | 4th digit | 5th digit | 6th digit | 7th digit

Series Σ-7 Series Servomotors

Code	Specification
SGM7E	Small capacity, coreless, inner rotor
SGM7F	Small capacity, with core, inner rotor
	Medium capacity, with core, inner rotor
SGMCV	Small capacity, with core, inner rotor
SGMCS	Small capacity, coreless, inner rotor
	Medium capacity, with core, inner rotor

1st+2nd digits Rated Torque

3rd digit Servomotor Outer Diameter

4th digit Serial Encoder Specification

5th digit Design Revision Order

6th digit Flange Specification

- Cable drawn to load side
- Cable drawn to non-load side

7th digit Option Specification

- High mechanical precision

Linear Servomotors

SGL □ □ - 30 A 050 C P □

Series | 1st digit | 2nd digit | 3rd digit on

Series Σ-7 Series Servomotors

1st digit Servomotor Type

Code	Specification
G	Coreless models
F	Models with F-type iron core
T	Models with T-type iron core

2nd digit Moving Coil/Magnetic Way

Code	Specification
W	Moving Coil
W2	
M	Magnetic Way
M2	

3rd digit on

The specifications for the 3rd digit on depend on the Servomotor type.

1.5 Combinations of SERVOPACKs and Servomotors

1.5.1 Combinations of Rotary Servomotors and SERVOPACKs

Rotary Servomotor Model		Capacity	SERVOPACK Model SGD7S-
SGM7M (Low Inertia, Ultra-small Capacity), 3000 min^{-1}	SGM7M-A1A	11 W	R90A or R90F
	SGM7M-A2A	22 W	
	SGM7M-A3A	33 W	1R6A or 2R1F
SGM7J (Medium Inertia, Small Capacity), 3,000 min^{-1}	SGM7J-A5A	50 W	R70A or R70F
	SGM7J-01A	100 W	R90A or R90F
	SGM7J-C2A	150 W	1R6A or 2R1F
	SGM7J-02A	200 W	
	SGM7J-04A	400 W	2R8A or 2R8F
	SGM7J-06A	600 W	5R5A
	SGM7J-08A	750 W	
SGM7A (Low Inertia, Small Capacity), 3,000 min^{-1}	SGM7A-A5A	50 W	R70A or R70F
	SGM7A-01A	100 W	R90A or R90F
	SGM7A-C2A	150 W	1R6A or 2R1F
	SGM7A-02A	200 W	
	SGM7A-04A	400 W	2R8A or 2R8F
	SGM7A-06A	600 W	5R5A
	SGM7A-08A	750 W	
	SGM7A-10A	1.0 kW	120A
	SGM7A-15A	1.5 kW	
	SGM7A-20A	2.0 kW	180A
	SGM7A-25A	2.5 kW	200A
	SGM7A-30A	3.0 kW	
	SGM7A-40A	4.0 kW	330A
	SGM7A-50A	5.0 kW	
	SGM7A-70A	7.0 kW	550A
SGM7P (Medium Inertia, Flat), 3,000 min^{-1}	SGM7P-01A	100 W	R90A or R90F
	SGM7P-02A	200 W	2R8A or 2R1F
	SGM7P-04A	400 W	2R8A or 2R8F
	SGM7P-08A	750 W	5R5A
	SGM7P-15A	1.5 kW	120A
SGM7G (Medium Inertia, Medium Capacity), 1,500 min^{-1}	SGM7G-03A	300 W	3R8A
	SGM7G-05A	450 W	
	SGM7G-09A	850 W	7R6A
	SGM7G-13A	1.3 kW	120A
	SGM7G-20A	1.8 kW	180A
	SGM7G-30A	2.9 kW*1	330A
	SGM7G-44A	4.4 kW	
	SGM7G-55A	5.5 kW	470A
	SGM7G-75A	7.5 kW	550A
	SGM7G-1AA	11 kW	590A
	SGM7G-1EA	15 kW	780A
SGMMV*2 (Low Inertia, Ultra-small Capacity), 3,000 min^{-1}	SGMMV-A1A	10 W	R90A or R90F
	SGMMV-A2A	20 W	
	SGMMV-A3A	30 W	1R6A or 2R1F

*1. 2.4 kW when using the Servomotor with a SGD7S-200A SERVOPACK.
*2. The SGMMV Servomotor is an older model. When purchasing a new Servomotor, we recommend selecting a SGM7M Servomotor.

1.5.2 Combinations of Direct Drive Servomotors and SERVOPACKs

Direct Drive Servomotor Model		Rated Torque [N·m]	Instantaneous Maximum Torque [N·m]	SERVOPACK Model SGD7S-
SGM7E (Small Capacity, Coreless, Inner Rotor)	SGM7E-02B	2	6	2R8A or 2R1F
	SGM7E-05B	5	15	
	SGM7E-07B	7	21	
	SGM7E-04C	4	12	2R8A or 2R8F
	SGM7E-10C	10	30	
	SGM7E-14C	14	42	
	SGM7E-08D	8	24	
	SGM7E-17D	17	51	
	SGM7E-25D	25	75	
	SGM7E-16E	16	48	5R5A
	SGM7E-35E	35	105	
SGM7F (Small Capacity, With Core, Inner Rotor)	SGM7F-02A	2	6	2R8A or 2R1F
	SGM7F-05A	5	15	
	SGM7F-07A	7	21	2R8A or 2R8F
	SGM7F-04B	4	12	
	SGM7F-10B	10	30	
	SGM7F-14B	14	42	5R5A
	SGM7F-08C	8	24	2R8A or 2R8F
	SGM7F-17C	17	51	5R5A
	SGM7F-25C	25	75	7R6A
	SGM7F-16D	16	48	5R5A
	SGM7F-35D	35	105	7R6A* or 120A
SGM7F (Medium Capacity, With Core, Inner Rotor)	SGM7F-45M	45	135	7R6A
	SGM7F-80M	80	240	120A
	SGM7F-80N	80	240	
	SGM7F-1AM	110	330	180A
	SGM7F-1EN	150	450	200A
	SGM7F-2ZN	200	600	
SGMCV (Small Capacity, With Core, Inner Rotor)	SGMCV-04B	4	12	2R8A or 2R8F
	SGMCV-10B	10	30	
	SGMCV-14B	14	42	5R5A
	SGMCV-08C	8	24	2R8A or 2R8F
	SGMCV-17C	17	51	5R5A
	SGMCV-25C	25	75	7R6A
	SGMCV-16D	16	48	5R5A
	SGMCV-35D	35	105	7R6A* or 120A

Continued on next page.

Continued from previous page.

Direct Drive Servomotor Model		Rated Torque [N·m]	Instantaneous Maximum Torque [N·m]	SERVOPACK Model SGD7S-
SGMCS (Small Capacity, Coreless, Inner Rotor)	SGMCS-02B	2	6	2R8A or 2R1F
	SGMCS-05B	5	15	
	SGMCS-07B	7	21	
	SGMCS-04C	4	12	2R8A or 2R8F
	SGMCS-10C	10	30	
	SGMCS-14C	14	42	
	SGMCS-08D	8	24	
	SGMCS-17D	17	51	
	SGMCS-25D	25	75	
	SGMCS-16E	16	48	5R5A
	SGMCS-35E	35	105	
SGMCS (Medium Capacity, With Core, Inner Rotor)	SGMCS-45M	45	135	7R6A
	SGMCS-80M	80	240	120A
	SGMCS-80N	80	240	
	SGMCS-1AM	110	330	180A
	SGMCS-1EN	150	450	200A
	SGMCS-2ZN	200	600	

* Use derated values for this combination. Refer to the following catalog for information on derating values.
AC Servo Drives Σ-7 Series (Manual No.: KAEP S800001 23)

1.5.3 Combinations of Linear Servomotors and SERVOPACKs

Linear Servomotor Model		Rated Force [N]	Instantaneous Maximum Force [N]	SERVOPACK Model SGD7S-
SGLG (Coreless), Used with Standard-Force Magnetic Way	SGLGW-30A050C	12.5	40	R70A or R70F
	SGLGW-30A080C	25	80	R90A or R90F
	SGLGW-40A140C	47	140	
	SGLGW-40A253C	93	280	1R6A or 2R1F
	SGLGW-40A365C	140	420	2R8A or 2R8F
	SGLGW-60A140C	70	220	1R6A or 2R1F
	SGLGW-60A253C	140	440	2R8A or 2R8F
	SGLGW-60A365C	210	660	5R5A
	SGLGW-90A200C	325	1300	120A
	SGLGW-90A370C	550	2200	180A
	SGLGW-90A535C	750	3000	200A
SGLG (Coreless), Used with High-Force Magnetic Way	SGLGW-40A140C	57	230	1R6A or 2R1F
	SGLGW-40A253C	114	460	2R8A or 2R8F
	SGLGW-40A365C	171	690	3R8A
	SGLGW-60A140C	85	360	1R6A or 2R1F
	SGLGW-60A253C	170	720	3R8A
	SGLGW-60A365C	255	1080	7R6A

Continued on next page.

Continued from previous page.

Linear Servomotor Model		Rated Force [N]	Instantaneous Maximum Force [N]	SERVOPACK Model SGD7S-
SGLF (With F-type Iron Cores)	SGLFW-20A090A	25	86	1R6A or 2R1F
	SGLFW-20A120A	40	125	
	SGLFW-35A120A	80	220	
	SGLFW-35A230A	160	440	3R8A
	SGLFW-50A200B	280	600	5R5A
	SGLFW-50A380B	560	1200	120A
	SGLFW-1ZA200B			
	SGLFW-1ZA380B	1120	2400	200A
	SGLFW2-30A070A	45	135	1R6A or 2R1F
	SGLFW2-30A120A	90	270	
	SGLFW2-30A230A*	180	540	3R8A
		170	500	2R8A or 2R8F
	SGLFW2-45A200A	280	840	5R5A
	SGLFW2-45A380A*	560	1680	180A
			1500	120A
	SGLFW2-90A200A□1	560	1680	120A
	SGLFW2-90A200A□L	896	1680	
	SGLFW2-90A380A	1120	3360	200A
	SGLFW2-90A560A	1680	5040	330A
	SGLFW2-1DA380A	1680	5040	200A
	SGLFW2-1DA560A	2520	7560	330A
SGLT (With T-type Iron Cores)	SGLTW-20A170A	130	380	3R8A
	SGLTW-20A320A	250	760	7R6A
	SGLTW-20A460A	380	1140	120A
	SGLTW-35A170A	220	660	5R5A
	SGLTW-35A170H	300	600	
	SGLTW-35A320A	440	1320	120A
	SGLTW-35A320H	600	1200	
	SGLTW-35A460A	670	2000	180A
	SGLTW-40A400B	670	2600	
	SGLTW-40A600B	1000	4000	330A
	SGLTW-50A170H	450	900	5R5A
	SGLTW-50A320H	900	1800	120A
	SGLTW-80A400B	1300	5000	330A
	SGLTW-80A600B	2000	7500	550A

* The force depends on the SERVOPACK that is used with the Servomotor.

1.6 EtherCAT Communications Indicators

This diagram shows details of the EtherCAT communications indicators.

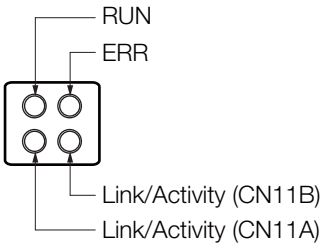

1.6.1 RUN

The RUN indicator shows the status of EtherCAT communications.

Indicator		Description
Status	Pattern	
Off	Never lit.	EtherCAT (CoE) communications are in INIT state.
Blinking		EtherCAT (CoE) communications are in PRE-OPERATIONAL state.
Double flash	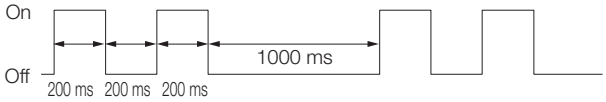	EtherCAT (CoE) communications are in SAFE-OPERATIONAL state.
On	Always lit.	EtherCAT (CoE) communications are in OPERATIONAL state.
Flickering	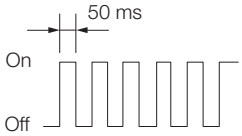	EtherCAT (CoE) communications have been started but are not yet in INIT state.

1.6.2 ERR

The ERR indicator shows the error status of EtherCAT communications.

Indicator		Description
Status	Pattern	
Off	Never lit.	EtherCAT communications are being performed.
Flickering	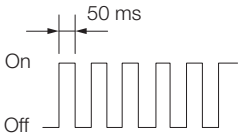	A boot error occurred.
Blinking	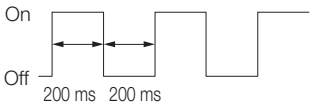	A change in state requested by the master could not be made due to register or object settings.
Single flash	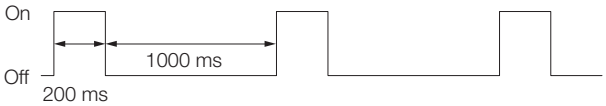	A synchronization error occurred and EtherCAT (CoE) communications automatically went to SAFE-OPERATIONAL state.
Double flash	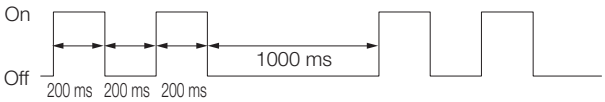	An application (Sync Manager) watchdog timeout error occurred.
On	Always lit.	A PDI watchdog timeout error occurred.

1.6.3 Link/Activity

The Link/Activity indicators show whether Communications Cables are connected to the CN6A and CN6B connectors and whether communications are active.

Indicator		Description
Status	Pattern	
Off	Never lit.	A Communications Cable is not connected and the EtherCAT (CoE) controller is not running.
Flickering	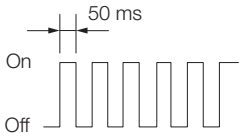	Data communications are in progress.
On	Always lit.	A Communications Cable is connected, but data communications are not being performed.

1.7 Functions

This section lists the functions provided by SERVOPACKs. Refer to the reference pages for details on the functions.

- Functions Related to the Machine

Function	Reference
Power Supply Type Settings for the Main Circuit and Control Circuit	page 5-14
Automatic Detection of Connected Motor	page 5-16
Motor Direction Setting	page 5-17
Linear Encoder Pitch Setting	page 5-18
Writing Linear Servomotor Parameters	page 5-19
Selecting the Phase Sequence for a Linear Servomotor	page 5-23
Polarity Sensor Setting	page 5-25
Polarity Detection	page 5-26
Overtravel Function and Settings	page 5-29
Holding Brake	page 5-34
Motor Stopping Methods for Servo OFF and Alarms	page 5-39
Resetting the Absolute Encoder	page 5-50
Setting the Origin of the Absolute Encoder	page 5-53
Setting the Regenerative Resistor Capacity	page 5-56
Operation for Momentary Power Interruptions	page 6-16
SEMI F47 Function	page 6-17
Setting the Motor Maximum Speed	page 6-19
Software Limits and Settings	page 6-27
Multiturn Limit Setting	page 6-39
Adjustment of Motor Current Detection Signal Offset	page 6-55
Forcing the Motor to Stop	page 6-59
Speed Ripple Compensation	page 8-60
Current Control Mode Selection	page 8-73
Current Gain Level Setting	page 8-74
Speed Detection Method Selection	page 8-74
Fully-Closed Loop Control	page 10-1
Safety Functions	page 11-1
External Latches	–

- Functions Related to the Host Controller

Function	Reference
Electronic Gear Settings	page 5-44
I/O Signal Allocations	page 6-4
Σ-V Compatible Function	page 5-57
ALM (Servo Alarm) Signal	page 6-8
/WARN (Warning Output) Signal	page 6-8
/TGON (Rotation Detection) Signal	page 6-9
/S-RDY (Servo Ready) Signal	page 6-10
/V-CMP (Speed Coincidence Detection) Signal	page 6-11
/COIN (Positioning Completion) Signal	page 6-12
/NEAR (Near) Signal	page 6-13

Continued on next page.

Continued from previous page.

Function	Reference
Speed Limit during Torque Control	page 6-14
/VLT (Speed Limit Detection) Signal	page 6-14
Encoder Divided Pulse Output	page 6-20
Selecting Torque Limits	page 6-28
Vibration Detection Level Initialization	page 6-51
Alarm Reset	page 12-42
Replacing the Battery	page 12-3
Setting the Position Deviation Overflow Alarm Level	page 8-8

- Functions to Achieve Optimum Motions

Function	Reference
Tuning-less Function	page 8-12
Autotuning without a Host Reference	page 8-24
Autotuning with a Host Reference	page 8-35
Custom Tuning	page 8-42
Anti-Resonance Control Adjustment	page 8-51
Vibration Suppression	page 8-56
Gain Selection	page 8-66
Friction Compensation	page 8-70
Backlash Compensation	page 8-75
Model Following Control	page 8-88
Compatible Adjustment Functions	page 8-91
Mechanical Analysis	page 8-95
Easy FFT	page 8-97

- Functions for Trial Operation during Setup

Function	Reference
Software Reset	page 6-48
Trial Operation for the Servomotor without a Load	page 7-7
Program Jogging	page 7-14
Origin Search	page 7-19
Test without a Motor	page 7-21
Monitoring Machine Operation Status and Signal Waveforms	page 9-7

- Functions for Inspection and Maintenance

Function	Reference
Write Prohibition Setting for Parameters	page 5-8
Initializing Parameter Settings	page 5-11
Automatic Detection of Connected Motor	page 5-16
Monitoring Product Information	page 9-2
Monitoring Product Life	page 9-2
Alarm History Display	page 12-43
Alarm Tracing	page 9-18

Selecting a SERVOPACK

2

This chapter provides information required to select SERVOPACKs, such as specifications, block diagrams, dimensional drawings, and connection examples.

2.1 Ratings and Specifications 2-2

2.1.1 Ratings 2-2
2.1.2 SERVOPACK Overload Protection Characteristics 2-5
2.1.3 Specifications 2-6

2.2 Block Diagrams 2-9

2.2.1 SGD7S-R70A, -R90A, and -1R6A 2-9
2.2.2 SGD7S-2R8A 2-9
2.2.3 SGD7S-3R8A, -5R5A, and -7R6A 2-10
2.2.4 SGD7S-120A 2-10
2.2.5 SGD7S-180A and -200A 2-12
2.2.6 SGD7S-330A 2-13
2.2.7 SGD7S-470A and -550A 2-14
2.2.8 SGD7S-590A and -780A 2-15
2.2.9 SGD7S-R70F, -R90F, and -2R1F 2-15
2.2.10 SGD7S-2R8F 2-16

2.3 External Dimensions 2-17

2.3.1 Front Cover Dimensions and Connector Specifications 2-17
2.3.2 SERVOPACK External Dimensions 2-18

2.4 Examples of Standard Connections between SERVOPACKs and Peripheral Devices . . 2-24

2.1 Ratings and Specifications

This section gives the ratings and specifications of SERVOPACKs.

2.1.1 Ratings

Three-Phase, 200 VAC

Model SGD7S-			R70A	R90A	1R6A	2R8A	3R8A	5R5A	7R6A	120A	180A	200A	330A
Maximum Applicable Motor Capacity [kW]			0.05	0.1	0.2	0.4	0.5	0.75	1.0	1.5	2.0	3.0	5.0
Continuous Output Current [Arms]			0.66	0.91	1.6	2.8	3.8	5.5	7.6	11.6	18.5	19.6	32.9
Instantaneous Maximum Output Current [Arms]			2.1	3.2	5.9	9.3	11	16.9	17	28	42	56	84
Main Circuit	Power Supply		200 VAC to 240 VAC, -15% to +10%, 50 Hz/60 Hz										
	Input Current [Arms]*		0.4	0.8	1.3	2.5	3.0	4.1	5.7	7.3	10	15	25
Control	Power Supply		200 VAC to 240 VAC, -15% to +10%, 50 Hz/60 Hz										
	Input Current [Arms]*		0.2	0.2	0.2	0.2	0.2	0.2	0.2	0.2	0.25	0.25	0.3
Power Supply Capacity [kVA]*			0.2	0.3	0.5	1.0	1.3	1.6	2.3	3.2	4.0	5.9	7.5
Power Loss*	Main Circuit Power Loss [W]		5.0	7.0	11.9	22.5	28.5	38.9	49.2	72.6	104.2	114.2	226.6
	Control Circuit Power Loss [W]		12	12	12	12	14	14	14	15	16	16	19
	Built-in Regenerative Resistor Power Loss [W]		–	–	–	–	8	8	8	12	12	12	36
	Total Power Loss [W]		17.0	19.0	23.9	34.5	50.5	60.9	71.2	97.6	136.2	146.2	281.6
Regenerative Resistor	Built-In Regenerative Resistor	Resistance [Ω]	–	–	–	–	40	40	40	20	12	12	8
		Capacity [W]	–	–	–	–	40	40	40	60	60	60	180
	Minimum Allowable External Resistance [Ω]		40	40	40	40	40	40	40	20	12	12	8
Overvoltage Category			III										

* This is the net value at the rated load.

Model SGD7S-		470A	550A	590A	780A
Maximum Applicable Motor Capacity [kW]		6.0	7.5	11	15
Continuous Output Current [Arms]		46.9	54.7	58.6	78.0
Instantaneous Maximum Output Current [Arms]		110	130	140	170
Main Circuit	Power Supply	200 VAC to 240 VAC, -15% to +10%, 50 Hz/60 Hz			
	Input Current [Arms]*1	29	37	54	73
Control	Power Supply	200 VAC to 240 VAC, -15% to +10%, 50 Hz/60 Hz			
	Input Current [Arms]*1	0.3	0.3	0.4	0.4
Power Supply Capacity [kVA]*1		10.7	14.6	21.7	29.6

Continued on next page.

Continued from previous page.

Model SGD7S-		470A	550A	590A	780A
Power Loss*1	Main Circuit Power Loss [W]	271.7	326.9	365.3	501.4
	Control Circuit Power Loss [W]	21	21	28	28
	External Regenerative Resistor Power Loss [W]	180*2	350*3	350*3	350*3
	Total Power Loss [W]	292.7	347.9	393.3	529.4
External Regenerative Resistor Unit	Resistance [Ω]	6.25*2	3.13*3	3.13*3	3.13*3
	Capacity [W]	880*2	1760*3	1760*3	1760*3
	Minimum Allowable External Resistance [Ω]	5.8	2.9	2.9	2.9
Overvoltage Category		III			

*1. This is the net value at the rated load.
*2. This value is for the optional JUSP-RA04-E Regenerative Resistor Unit.
*3. This value is for the optional JUSP-RA05-E Regenerative Resistor Unit.

Single-Phase, 200 VAC

Model SGD7S-			R70A	R90A	1R6A	2R8A	5R5A	120A
Maximum Applicable Motor Capacity [kW]			0.05	0.1	0.2	0.4	0.75	1.5
Continuous Output Current [Arms]			0.66	0.91	1.6	2.8	5.5	11.6
Instantaneous Maximum Output Current [Arms]			2.1	3.2	5.9	9.3	16.9	28
Main Circuit	Power Supply		200 VAC to 240 VAC, -15% to +10%, 50 Hz/60 Hz					
	Input Current [Arms]*		0.8	1.6	2.4	5.0	8.7	16
Control	Power Supply		200 VAC to 240 VAC, -15% to +10%, 50 Hz/60 Hz					
	Input Current [Arms]*		0.2	0.2	0.2	0.2	0.2	0.25
Power Supply Capacity [kVA]*			0.2	0.3	0.6	1.2	1.9	4.0
Power Loss*	Main Circuit Power Loss [W]		5.0	7.1	12.1	23.7	39.2	71.8
	Control Circuit Power Loss [W]		12	12	12	12	14	16
	Built-in Regenerative Resistor Power Loss [W]		–	–	–	–	8	12
	Total Power Loss [W]		17.0	19.1	24.1	35.7	61.2	103.8
Regenerative Resistor	Built-In Regenerative Resistor	Resistance [Ω]	–	–	–	–	40	12
		Capacity [W]	–	–	–	–	40	60
	Minimum Allowable External Resistance [Ω]		40	40	40	40	40	12
Overvoltage Category			III					

* This is the net value at the rated load.

270 VDC

Model SGD7S-		R70A	R90A	1R6A	2R8A	3R8A	5R5A	7R6A	120A
Maximum Applicable Motor Capacity [kW]		0.05	0.1	0.2	0.4	0.5	0.75	1.0	1.5
Continuous Output Current [Arms]		0.66	0.91	1.6	2.8	3.8	5.5	7.6	11.6
Instantaneous Maximum Output Current [Arms]		2.1	3.2	5.9	9.3	11.0	16.9	17.0	28.0
Main Circuit	Power Supply	270 VDC to 324 VDC, -15% to +10%							
	Input Current [Arms]*1	0.5	1.0	1.5	3.0	3.8	4.9	6.9	11
Control	Power Supply	270 VDC to 324 VDC, -15% to +10%							
	Input Current [Arms]*1	0.2	0.2	0.2	0.2	0.2	0.2	0.2	0.2*2
Power Supply Capacity [kVA]]*1		0.2	0.3	0.6	1	1.4	1.6	2.3	3.2
Power Loss]*1	Main Circuit Power Loss [W]	4.4	5.9	9.8	17.5	23.0	30.7	38.7	55.8
	Control Circuit Power Loss [W]	12	12	12	12	14	14	14	15
	Total Power Loss [W]	16.4	17.9	21.8	29.5	37.0	44.7	52.7	70.8
Overvoltage Category		III							

*1. This is the net value at the rated load.
*2. The value is 0.25 Arms for the SGD7S-120A30A008.

Model SGD7S-		180A	200A	330A	470A	550A	590A	780A
Maximum Applicable Motor Capacity [kW]		2.0	3.0	5.0	6.0	7.5	11.0	15.0
Continuous Output Current [Arms]		18.5	19.6	32.9	46.9	54.7	58.6	78.0
Instantaneous Maximum Output Current [Arms]		42.0	56.0	84.0	110	130	140	170
Main Circuit	Power Supply	270 VDC to 324 VDC, -15% to +10%						
	Input Current [Arms]*	14	20	34	36	48	68	92
Control	Power Supply	270 VDC to 324 VDC, -15% to +10%						
	Input Current [Arms]*	0.25	0.25	0.3	0.3	0.3	0.4	0.4
Power Supply Capacity [kVA]*		4.0	5.9	7.5	10.7	14.6	21.7	29.6
Power Loss*	Main Circuit Power Loss [W]	82.7	83.5	146.2	211.6	255.3	243.6	343.4
	Control Circuit Power Loss [W]	16	16	19	21	21	28	28
	Total Power Loss [W]	98.7	99.5	165.2	232.6	276.3	271.6	371.4
Overvoltage Category		III						

* This is the net value at the rated load.

Single-Phase, 100 VAC

Model SGD7S-		R70F	R90F	2R1F	2R8F
Maximum Applicable Motor Capacity [kW]		0.05	0.1	0.2	0.4
Continuous Output Current [Arms]		0.66	0.91	2.1	2.8
Instantaneous Maximum Output Current [Arms]		2.1	3.2	6.5	9.3
Main Circuit	Power Supply	100 VAC to 120 VAC, -15% to +10%, 50 Hz/60 Hz			
	Input Current [Arms]*	1.5	2.5	5	10
Control	Power Supply	100 VAC to 120 VAC, -15% to +10%, 50 Hz/60 Hz			
	Input Current [Arms]*	0.38	0.38	0.38	0.38
Power Supply Capacity [kVA]*		0.2	0.3	0.6	1.4
Power Loss*	Main Circuit Power Loss [W]	5.3	7.8	14.2	26.2
	Control Circuit Power Loss [W]	12	12	12	12
	Total Power Loss [W]	17.3	19.8	26.2	38.2
Regenerative Resistor	Minimum Allowable Resistance [Ω]	40	40	40	40
Overvoltage Category		III			

* This is the net value at the rated load.

2.1.2 SERVOPACK Overload Protection Characteristics

The overload detection level is set for hot start conditions with a SERVOPACK surrounding air temperature of 55°C.

An overload alarm (A.710 or A.720) will occur if overload operation that exceeds the overload protection characteristics shown in the following diagram (i.e., operation on the right side of the applicable line) is performed.

The actual overload detection level will be the detection level of the connected SERVOPACK or Servomotor that has the lower overload protection characteristics.

In most cases, that will be the overload protection characteristics of the Servomotor.

- SGD7S-R70A, -R90A, -1R6A, -2R8A, -R70F, -R90F, -2R1F, and -2R8F

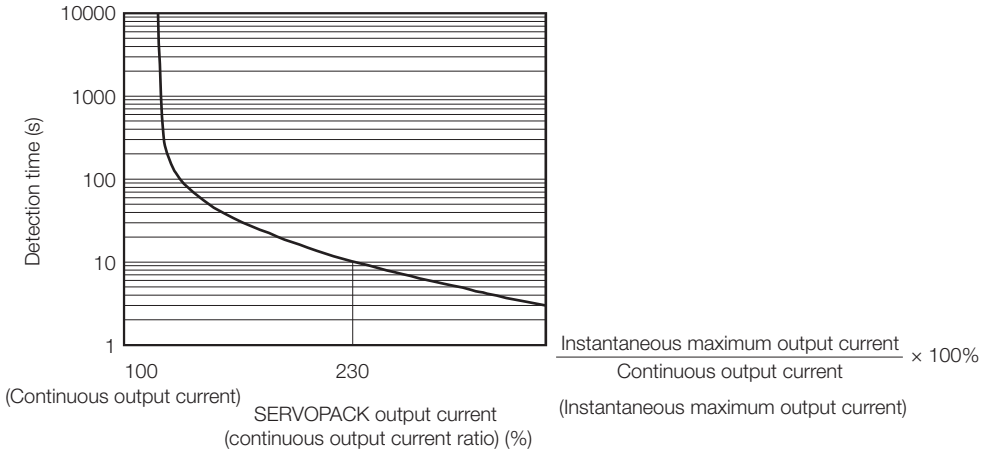

Note: The above overload protection characteristics do not mean that you can perform continuous duty operation with an output of 100% or higher.
For a Yaskawa-specified combination of SERVOPACK and Servomotor, maintain the effective torque within the continuous duty zone of the torque-motor speed characteristic of the Servomotor.

- SGD7S-3R8A, -5R5A, -7R6A, -120A, -180A, -200A, -330A, -470A, -550A, -590A, and -780A

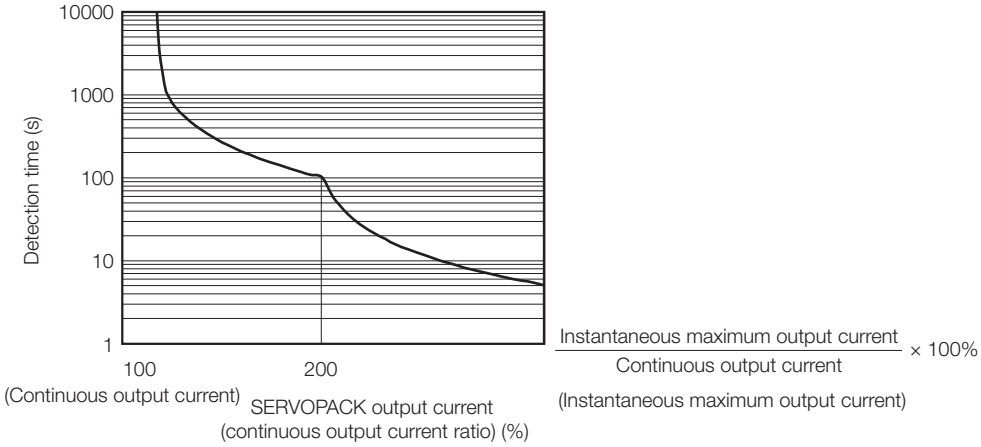

Note: The above overload protection characteristics do not mean that you can perform continuous duty operation with an output of 100% or higher.
For a Yaskawa-specified combination of SERVOPACK and Servomotor, maintain the effective torque within the continuous duty zone of the torque-motor speed characteristic of the Servomotor.

2.1.3 Specifications

Item		Specification
Drive Method		IGBT-based PWM control, sine wave current drive
Feedback	With Rotary Servomotor	Serial encoder: 17 bits (absolute encoder) 20 bits or 24 bits (incremental encoder/absolute encoder) 22 bits (absolute encoder)
	With Linear Servomotor	• Absolute linear encoder (The signal resolution depends on the absolute linear encoder.) • Incremental linear encoder (The signal resolution depends on the incremental linear encoder or Serial Converter Unit.)
Environmental Conditions	Surrounding Air Temperature*1	-5°C to 55°C (With derating, usage is possible between 55°C and 60°C.) Refer to the following section for derating specifications. ☞ *3.6 Derating Specifications* on page 3-8
	Storage Temperature	-20°C to 85°C
	Surrounding Air Humidity	95% relative humidity max. (with no freezing or condensation)
	Storage Humidity	95% relative humidity max. (with no freezing or condensation)
	Vibration Resistance	4.9 m/s^2
	Shock Resistance	19.6 m/s^2
	Degree of Protection	Degree: SERVOPACK Model: SGD7S- IP20: R70A, R90A, 1R6A, 2R8A, 3R8A, 5R5A, 7R6A, 120A, R70F, R90F, 2R1F, 2R8F IP10: 120A30A008, 180A, 200A, 330A, 470A, 550A, 590A, 780A
	Pollution Degree	2 • Must be no corrosive or flammable gases. • Must be no exposure to water, oil, or chemicals. • Must be no dust, salts, or iron dust.
	Altitude*1	1,000 m or less. (With derating, usage is possible between 1,000 m and 2,000 m.) Refer to the following section for derating specifications. ☞ *3.6 Derating Specifications* on page 3-8
	Others	Do not use the SERVOPACK in the following locations: Locations subject to static electricity noise, strong electromagnetic/magnetic fields, or radioactivity
Applicable Standards		Refer to the following section for details. ☞ *Compliance with UL Standards, EU Directives, and Other Safety Standards* on page xxv
Mounting		Mounting: SERVOPACK Model: SGD7S- Base-mounted: All Models Rack-mounted: R70A, R90A, 1R6A, 2R8A, 3R8A, 5R5A, 7R6A, 120A, 180A, 200A, 330A, R70F, R90F, 2R1F, 2R8F Duct-ventilated: 470A, 550A, 590A, 780A

Continued on next page.

Continued from previous page.

Item			Specification
Performance	Speed Control Range		1:5000 (At the rated torque, the lower limit of the speed control range must not cause the Servomotor to stop.)
	Coefficient of Speed Fluctuation*2		±0.01% of rated speed max. (for a load fluctuation of 0% to 100%)
			0% of rated speed max. (for a voltage fluctuation of ±10%)
			±0.1% of rated speed max. (for a temperature fluctuation of 25°C ±25°C)
	Torque Control Precision (Repeatability)		±1%
	Soft Start Time Setting		0 s to 10 s (Can be set separately for acceleration and deceleration.)
I/O Signals	Encoder Divided Pulse Output		Phase A, phase B, phase C: Line-driver output Number of divided output pulses: Any setting is allowed.
	Overheat Protection Input		Number of input points: 1 Input voltage range: 0 V to +5 V
	Sequence Input Signals	Input Signals That Can Be Allocated	Allowable voltage range: 24 VDC ±20% Number of input points: 7 (Input method: Sink inputs or source inputs)
			Input Signals • P-OT (Forward Drive Prohibit) and N-OT (Reverse Drive Prohibit) signals • /P-CL (Forward External Torque Limit) and /N-CL (Reverse External Torque Limit) signals • /DEC (Origin Return Deceleration Switch) signal • /EXT1 to /EXT3 (External Latch Input 1 to 3) signals • FSTP (Forced Stop Input) signal A signal can be allocated and the positive and negative logic can be changed.
	Sequence Output Signals	Fixed Output	Allowable voltage range: 5 VDC to 30 VDC Number of output points: 1 (A photocoupler output (isolated) is used.)
			Output signal: ALM (Servo Alarm) signal
		Output Signals That Can Be Allocated	Allowable voltage range: 5 VDC to 30 VDC Number of output points: 3 (A photocoupler output (isolated) is used.)
			Output Signals • /COIN (Positioning Completion) signal • /V-CMP (Speed Coincidence Detection) signal • /TGON (Rotation Detection) signal • /S-RDY (Servo Ready) signal • /CLT (Torque Limit Detection) signal • /VLT (Speed Limit Detection) signal • /BK (Brake) signal • /WARN (Warning) signal • /NEAR (Near) signal A signal can be allocated and the positive and negative logic can be changed.
Communications	RS-422A Communications (CN502)	Interfaces	Digital Operator (JUSP-OP05A-1-E) A JUSP-JC001 Communications Unit is required to connect to a Digital Operator.
		1:N Communications	Up to N = 15 stations possible for RS-422A port
		Axis Address Setting	03h to EFh (maximum number of slaves: 62) The rotary switches (S1 and S2) are used to set the station address.
	USB Communications (CN7)	Interface	Personal computer (with SigmaWin+)
		Communications Standard	Conforms to USB2.0 standard (12 Mbps).

Continued on next page.

Continued from previous page.

Item		Specification
Displays/Indicators		CHARGE, PWR, CN, L1, and L2 indicators, and one-digit seven-segment display
MECHATROLINK-III Communications	Communications Protocol	MECHATROLINK-III
	Station Address Settings	03h to EFh (maximum number of slaves: 62) The rotary switches (S1 and S2) are used to set the station address.
	Baud Rate	100 Mbps
	Transmission Cycle	125 μs, 250 μs, 500 μs, 750 μs, 1.0 ms to 4.0 ms (multiples of 0.5 ms)
	Number of Transmission Bytes	32 or 48 bytes per station A DIP switch (S3) is used to select the baud rate.
Reference Method	Performance	Position, speed, or torque control with MECHATROLINK-III communications
	Reference Input	MECHATROLINK-III commands (sequence, motion, data setting, data access, monitoring, adjustment, etc.)
	Profile	MECHATROLINK-III standard servo profile
MECHATROLINK-III Communications Setting Switches		Rotary switch (S1 and S2) positions: 16
		Number of DIP switch (S3) pins: 4
Analog Monitor (CN5)		Number of points: 2 Output voltage range: ±10 VDC (effective linearity range: ±8 V) Resolution: 16 bits Accuracy: ±20 mV (Typ) Maximum output current: ±10 mA Settling time (±1%): 1.2 ms (Typ)
Dynamic Brake (DB)		Activated when a servo alarm or overtravel (OT) occurs, or when the power supply to the main circuit or servo is OFF.
Regenerative Processing		Built-in (An external resistor must be connected to the SGD7S-470A to -780A.) Refer to the following manual for information on selecting External Regenerative Resistors. Σ-7-Series Peripheral Device Selection Manual (Manual No.: SIEP S800001 32)
Overtravel (OT) Prevention		Stopping with dynamic brake, deceleration to a stop, or coasting to a stop for the P-OT (Forward Drive Prohibit) or N-OT (Reverse Drive Prohibit) signal
Protective Functions		Overcurrent, overvoltage, low voltage, overload, regeneration error, etc.
Utility Functions		Gain adjustment, alarm history, jogging, origin search, etc.
Safety Functions	Inputs	/HWBB1 and /HWBB2: Base block signals for Power Modules
	Output	EDM1: Monitors the status of built-in safety circuit (fixed output).
	Applicable Standards*3	ISO13849-1 PLe (Category 3), IEC61508 SIL3
Applicable Option Modules		Fully-Closed Module and Safety Module Note: You cannot use a Fully-Closed Module and a Safety Module together.

*1. If you combine a Σ-7-Series SERVOPACK with a Σ-V-Series Option Module, the following Σ-V-Series SERVOPACKs specifications must be used: a surrounding air temperature of 0°C to 55°C and an altitude of 1,000 m max. Also, the applicable surrounding range cannot be increased by derating.

*2. The coefficient of speed fluctuation for load fluctuation is defined as follows:

$$\text{Coefficient of speed fluctuation} = \frac{\text{No-load motor speed - Total-load motor speed}}{\text{Rated motor speed}} \times 100\%$$

*3. Always perform risk assessment for the system and confirm that the safety requirements are met.

2.2 Block Diagrams

2.2.1 SGD7S-R70A, -R90A, and -1R6A

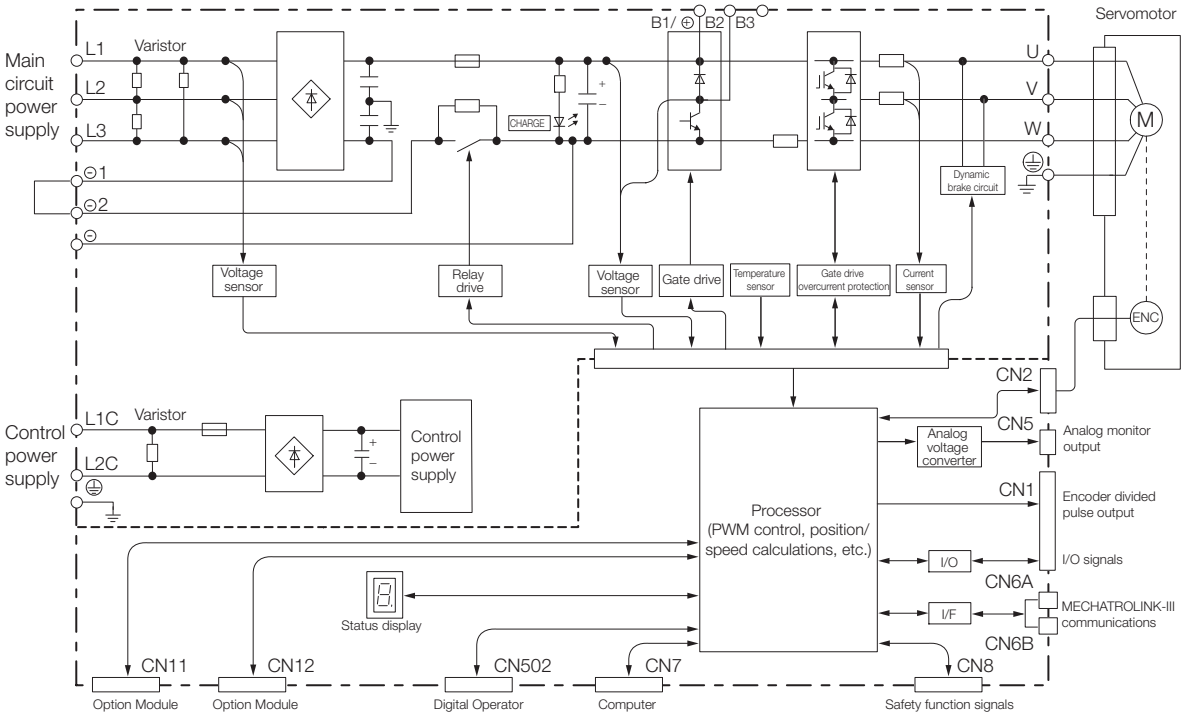

2.2.2 SGD7S-2R8A

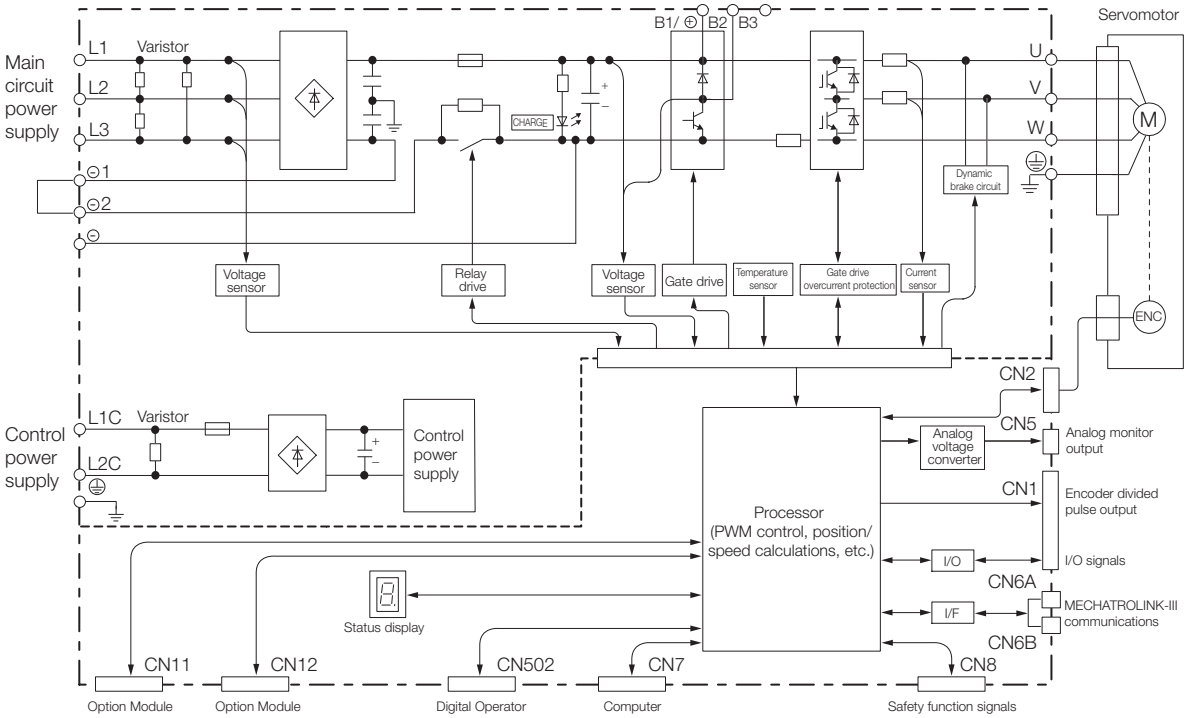

2.2.3 SGD7S-3R8A, -5R5A, and -7R6A

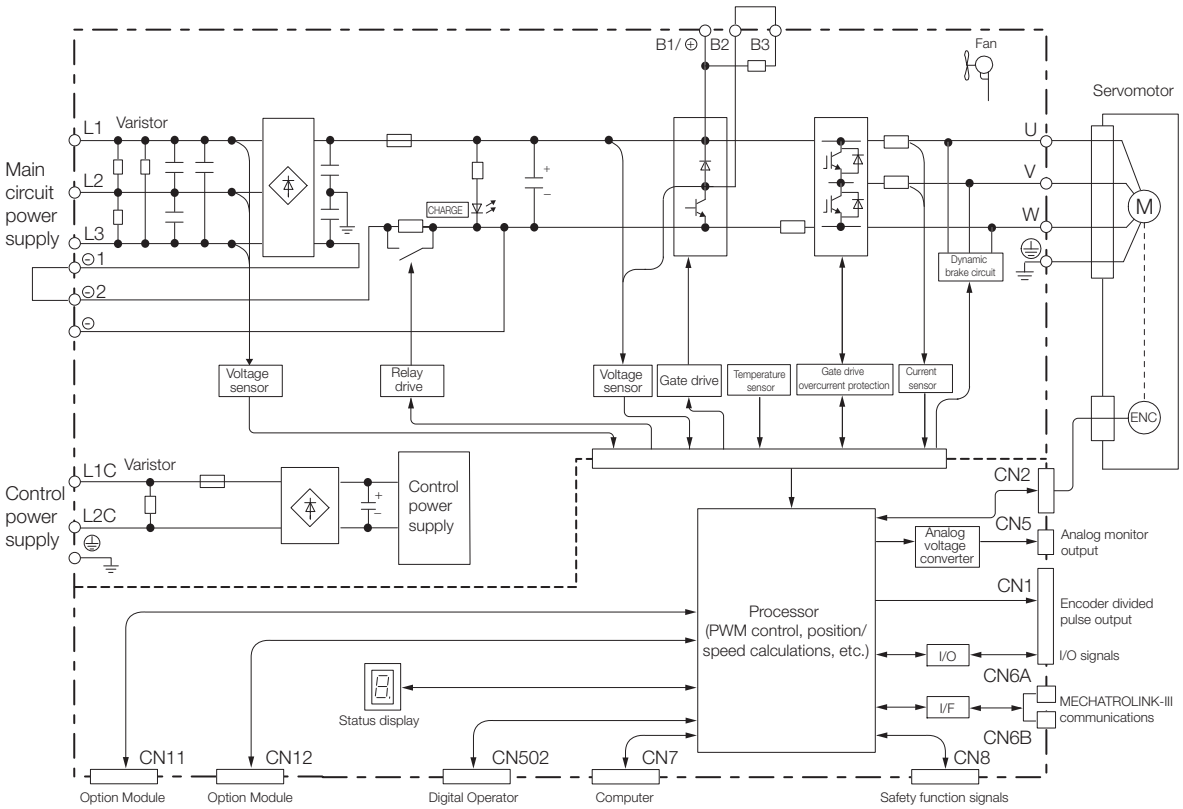

2.2.4 SGD7S-120A

- Standard Specifications: Three-Phase, 200-VAC Power Supply Input

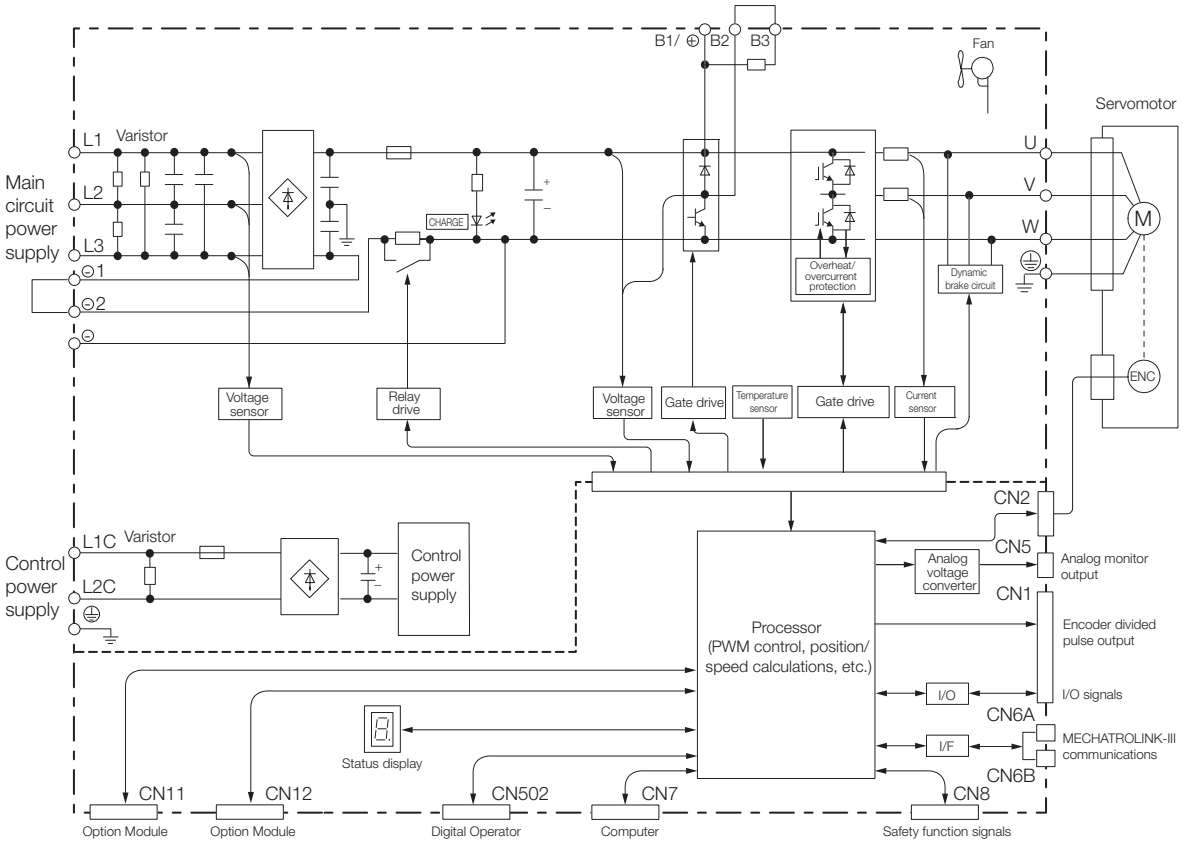

- Optional Specifications: Single-Phase, 200-VAC Power Supply Input (SERVOPACK Model: SGD7S-120A30A008)

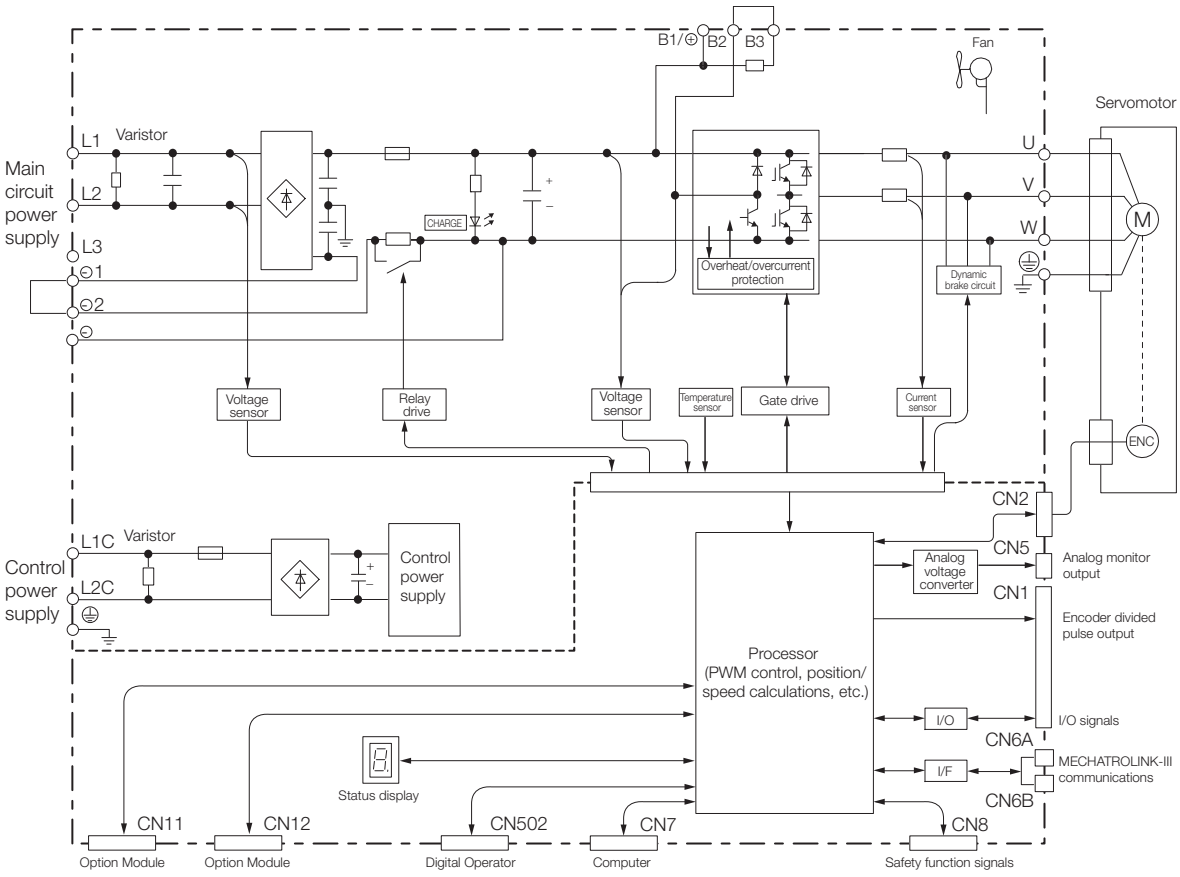

2.2.5 SGD7S-180A and -200A

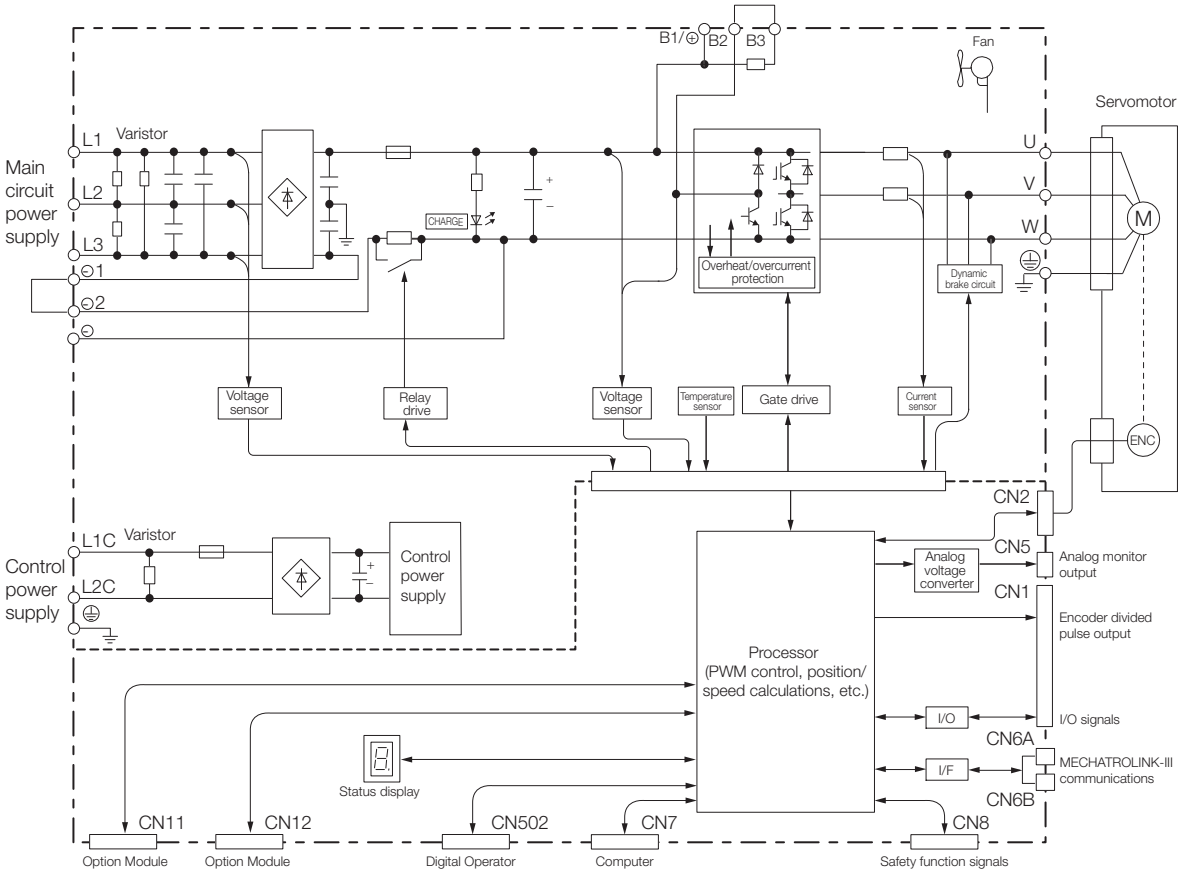

2.2.6 SGD7S-330A

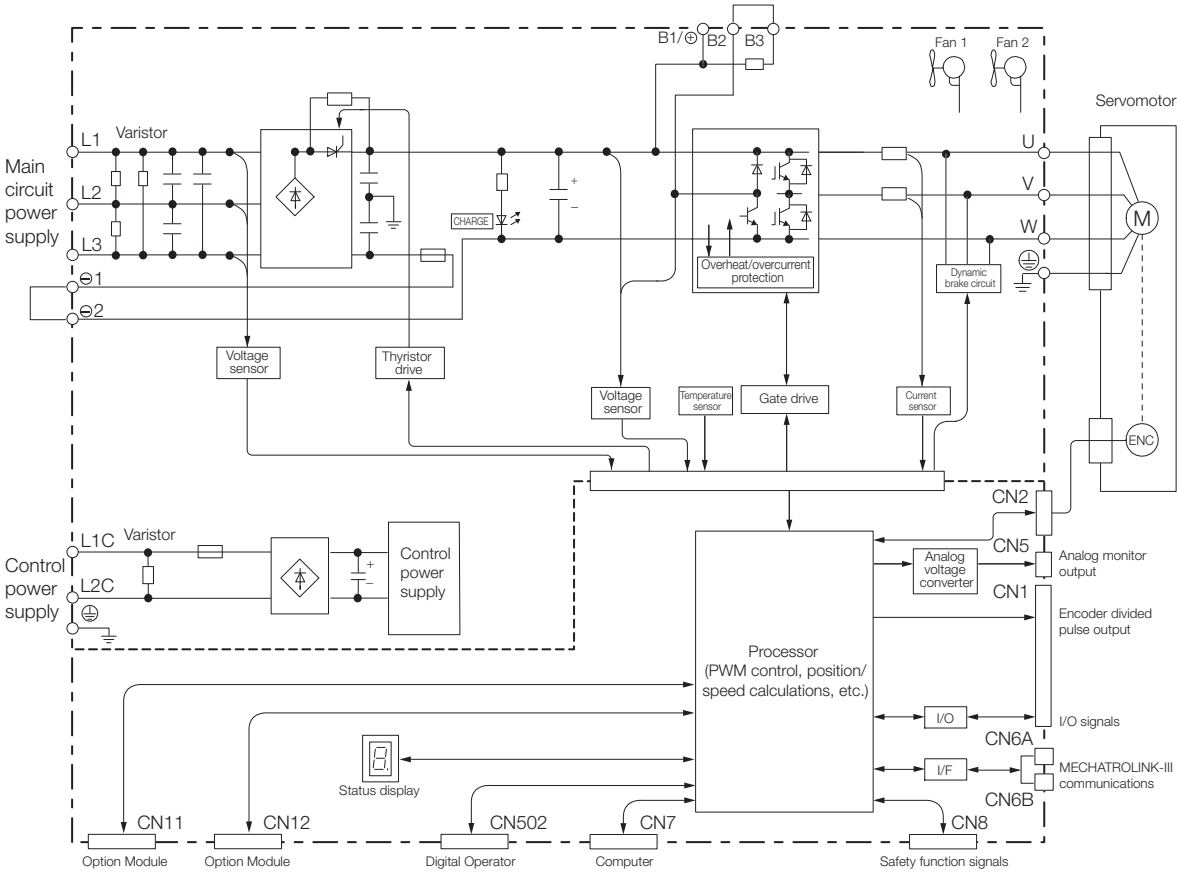

2.2.7 SGD7S-470A and -550A

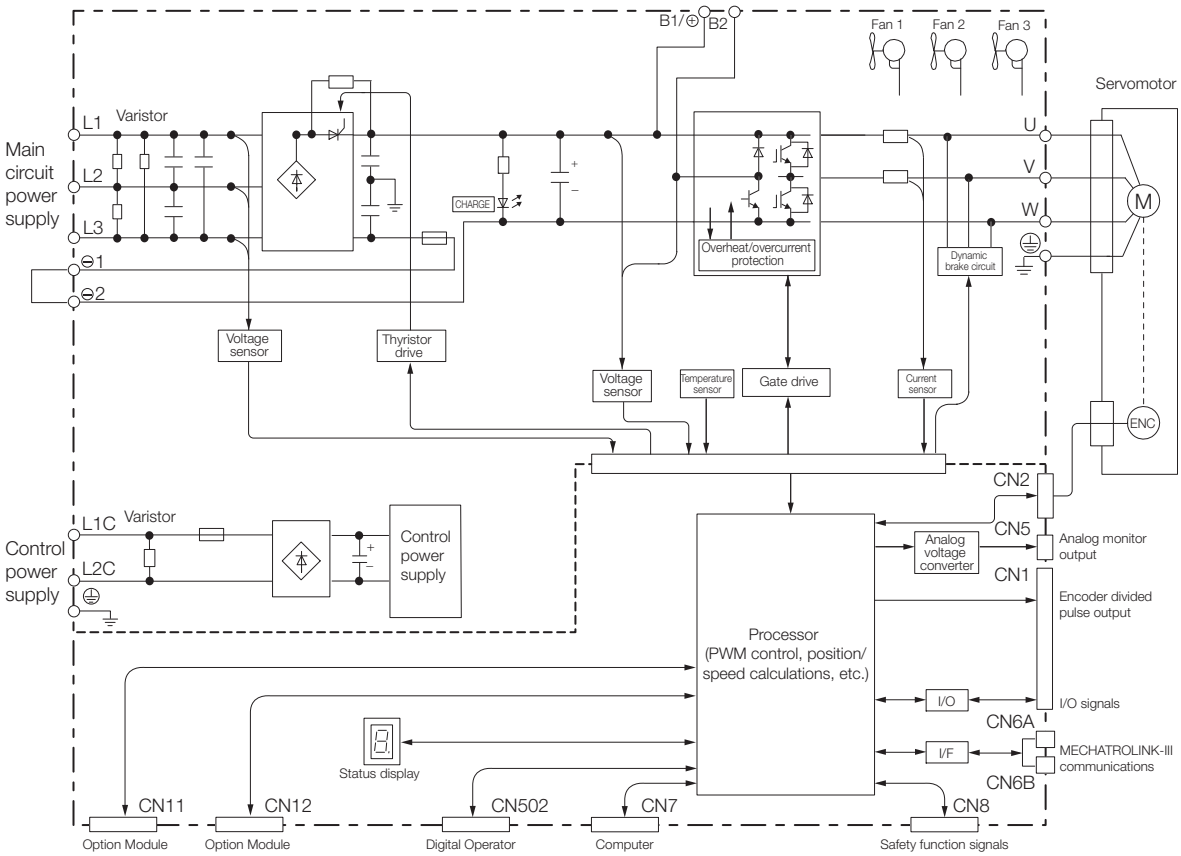

2.2.8 SGD7S-590A and -780A

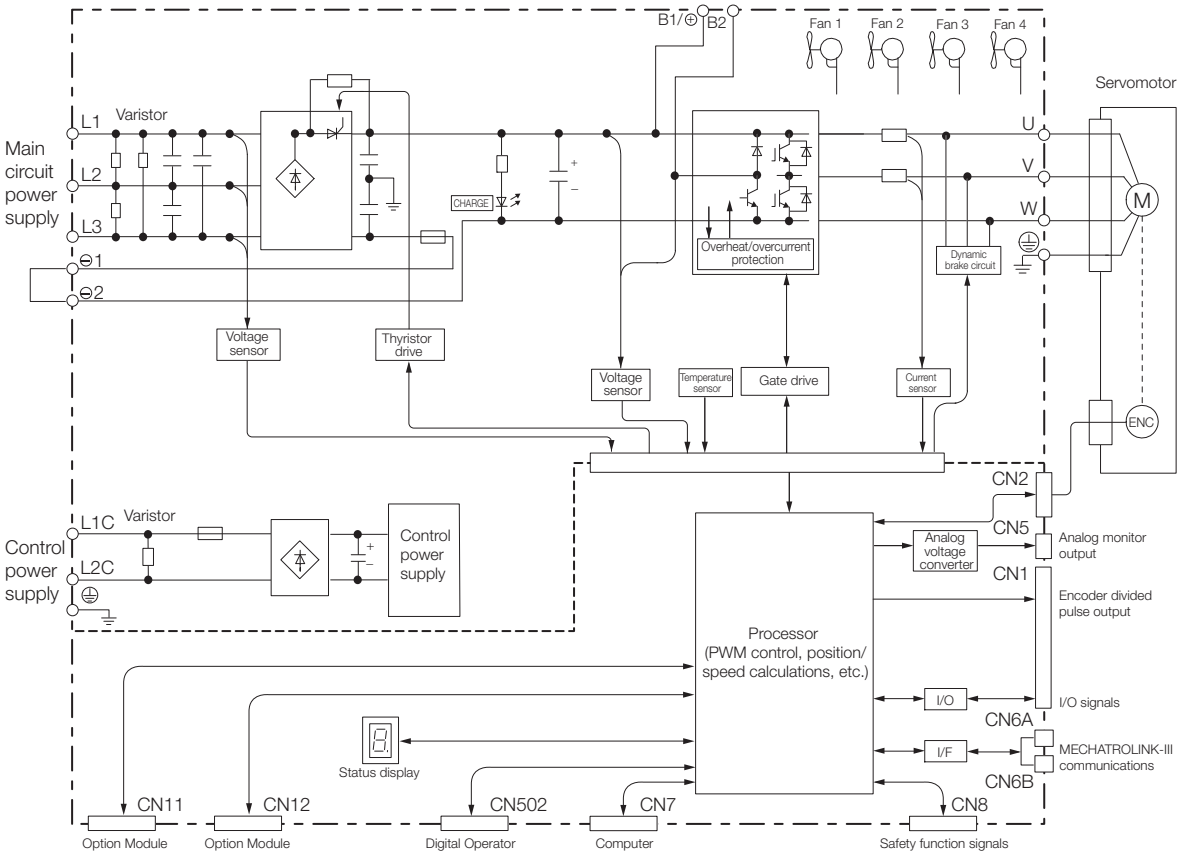

2.2.9 SGD7S-R70F, -R90F, and -2R1F

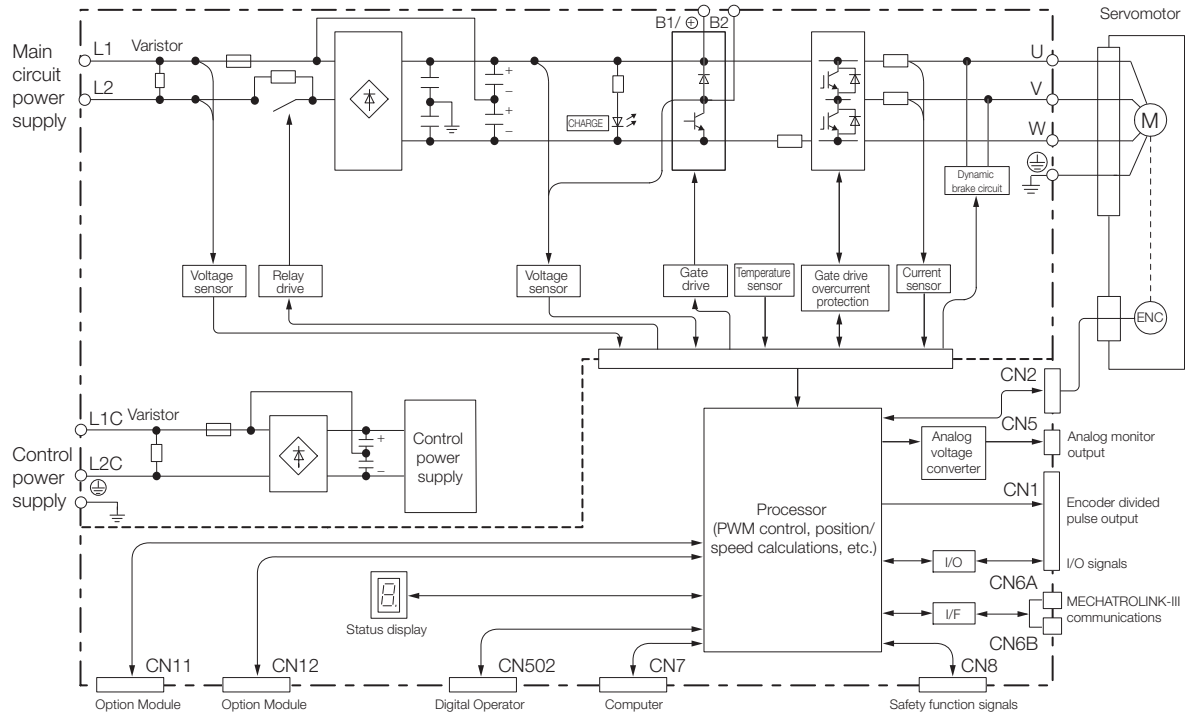

2.2.10 SGD7S-2R8F

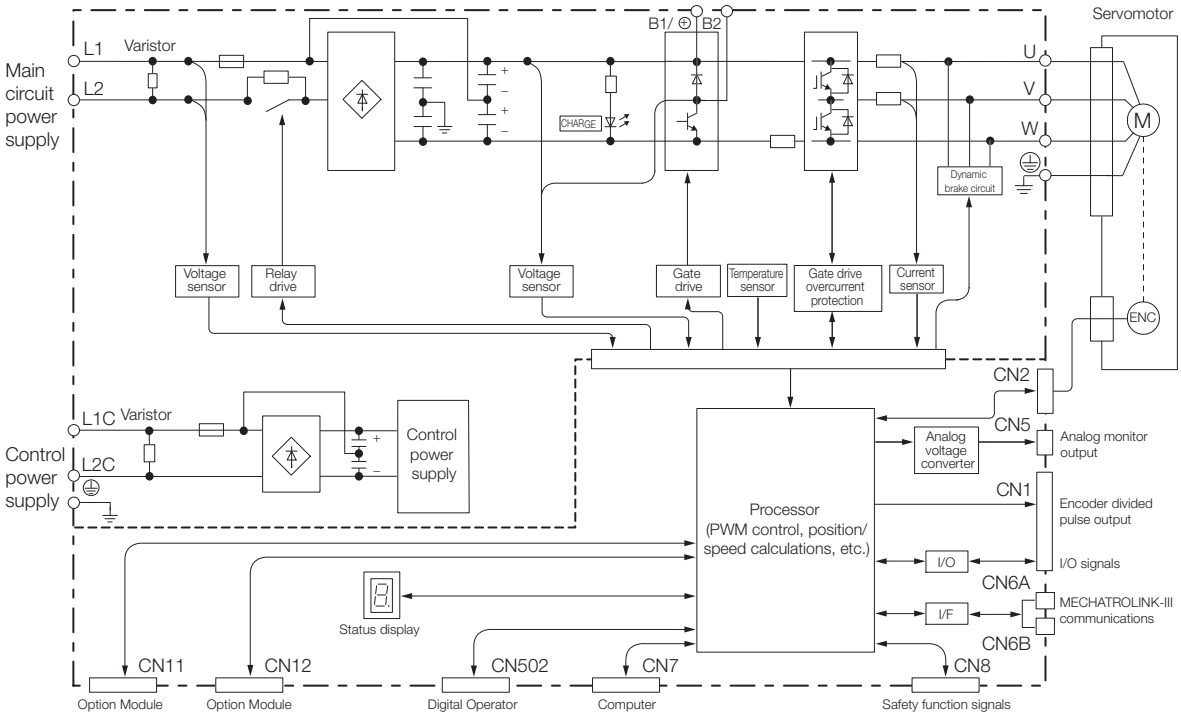

2.3 External Dimensions

2.3.1 Front Cover Dimensions and Connector Specifications

The front cover dimensions and panel connector section are the same for all models. Refer to the following figures and table.

- Front Cover Dimensions

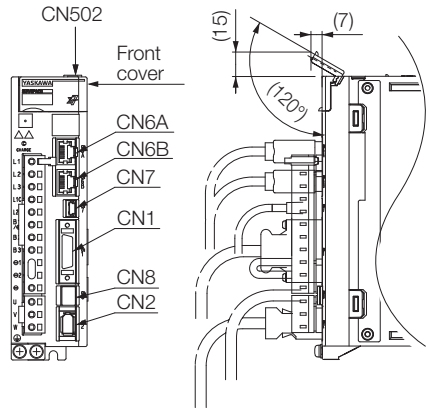

- Connector Specifications

Connector No.	Model	Number of Pins	Manufacturer
CN1	10226-59A3MB	26	3M Japan Limited
CN2	3E106-0220KV	6	3M Japan Limited
CN502	S8B-ZR-SM4A-TF (LF)(SN)	8	J.S.T. Mfg. Co., Ltd.
CN6A, CN6B	1-1734579-4	8	Tyco Electronics Japan G.K.
CN7	2172034-1	5	Tyco Electronics Japan G.K.
CN8	1981080-1	8	Tyco Electronics Japan G.K.

Note: The above connectors or their equivalents are used for the SERVOPACKs.

2.3.2 SERVOPACK External Dimensions

Base-mounted SERVOPACKs

- Three-phase, 200 VAC: SGD7S-R70A, -R90A, and -1R6A

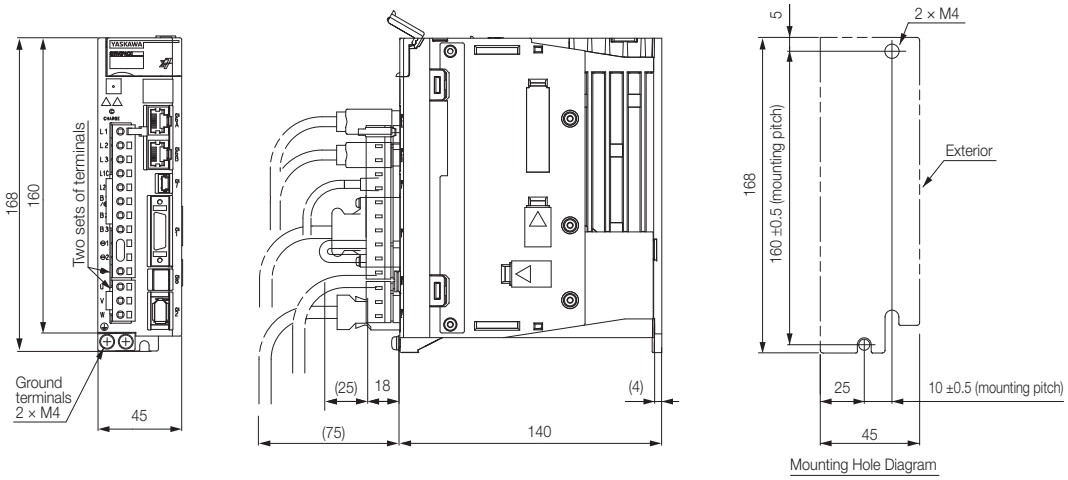

Approx. mass: 0.8 kg
Unit: mm

- Three-phase, 200 VAC: SGD7S-2R8A; Single-phase, 100 VAC: SGD7S-R70F, -R90F, and -2R1F

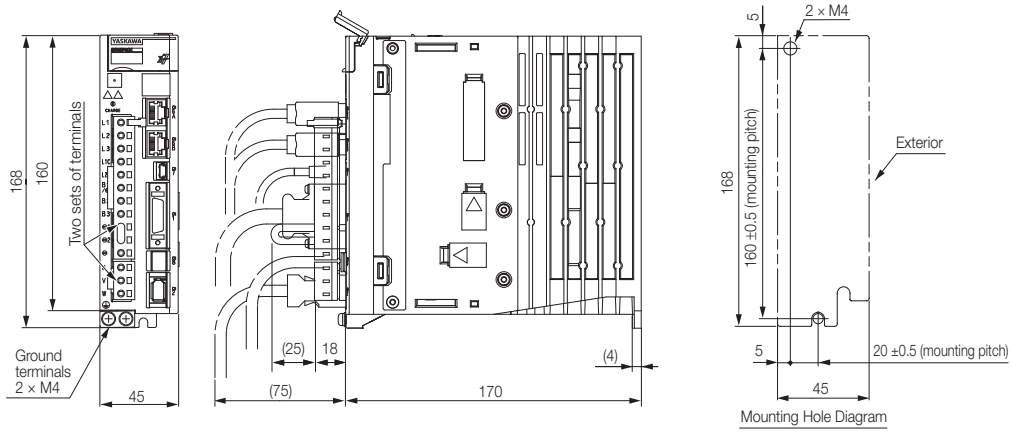

Approx. mass: 1.0 kg
Unit: mm

- Three-phase, 200 VAC: SGD7S-3R8A, -5R5A, and -7R6A; Single-phase, 100 VAC: SGD7S-2R8F

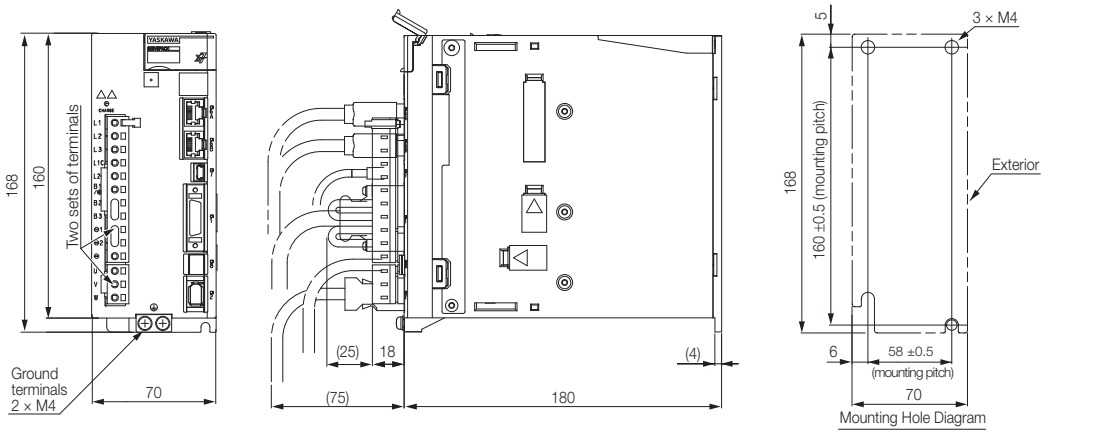

Approx. mass: 1.6 kg
Unit: mm

- Three-phase, 200 VAC: SGD7S-120A

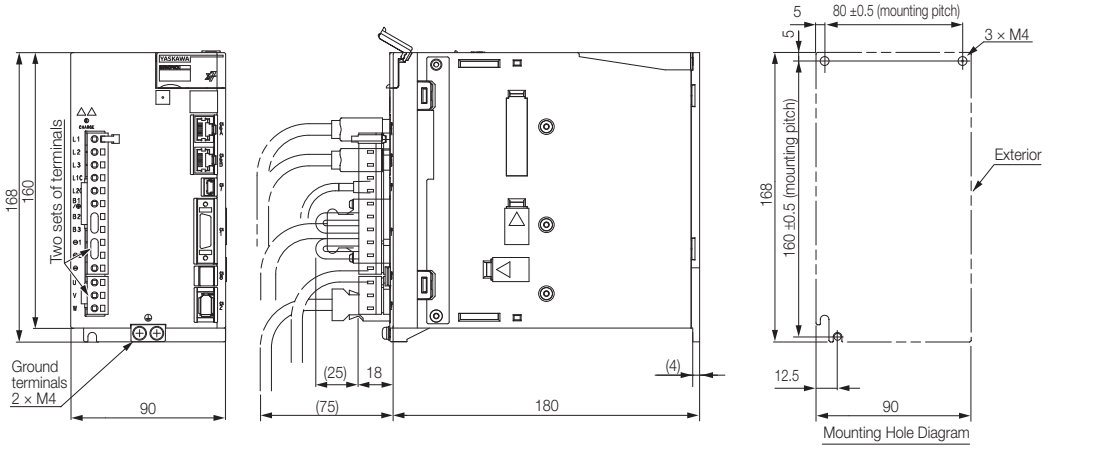

Approx. mass: 2.2 kg
Unit: mm

- Three-phase, 200 VAC: SGD7S-180A and -200A; Single-phase, 200 VAC: SGD7S-120A30A008

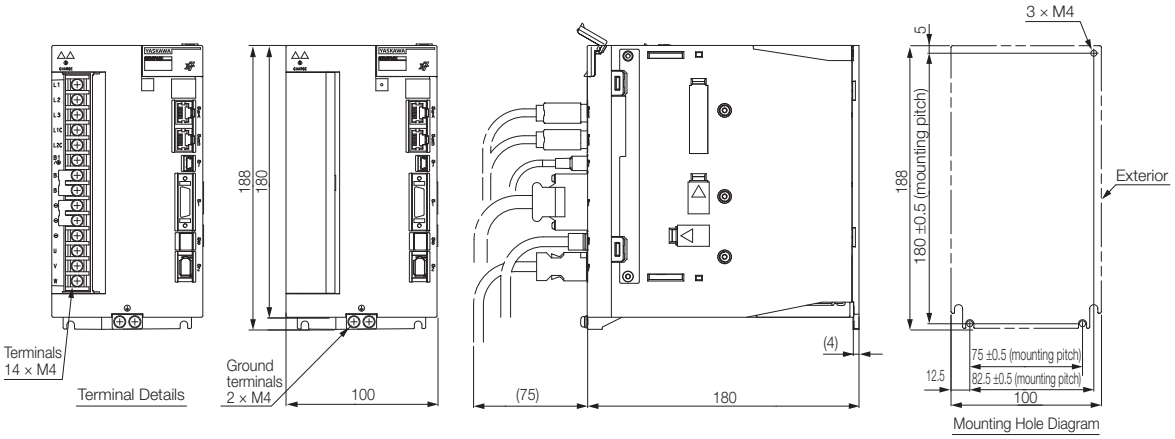

Approx. mass: 2.7 kg
Unit: mm

- Three-phase, 200 VAC: SGD7S-330A

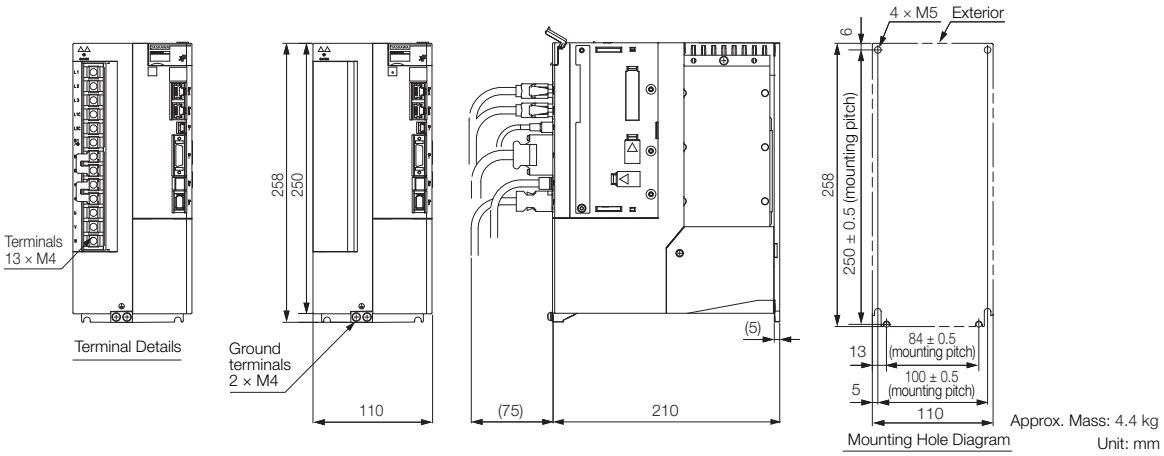

Approx. Mass: 4.4 kg
Unit: mm

- Three-phase, 200 VAC: SGD7S-470A and -550A

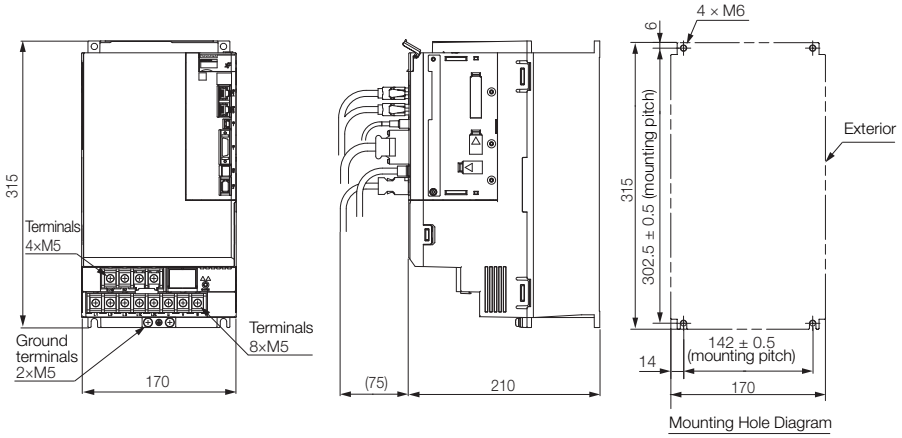

Approx. Mass: 8.2 kg
Unit: mm

- Three-phase, 200 VAC: SGD7S-590A and -780A

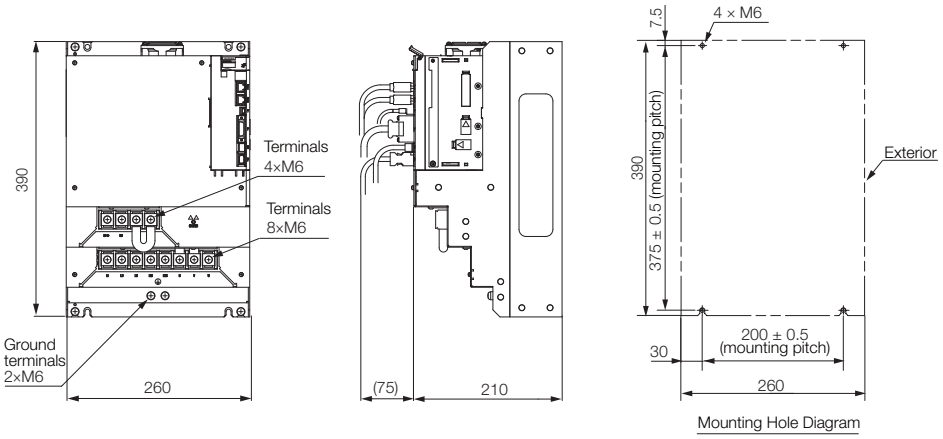

Approx. Mass: 15.5 kg
Unit: mm

Rack-mounted SERVOPACKs

Hardware Option Code: 001

- Three-phase, 200 VAC: SGD7S-R70A, -R90A, and -1R6A

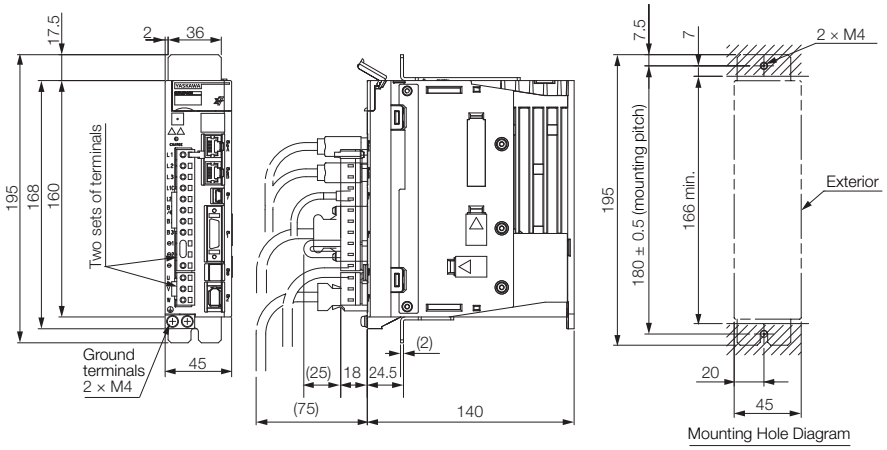

Approx. mass: 0.8 kg
Unit: mm

- Three-phase, 200 VAC: SGD7S-2R8A; Single-phase, 100 VAC: SGD7S-R70F, -R90F, and -2R1F

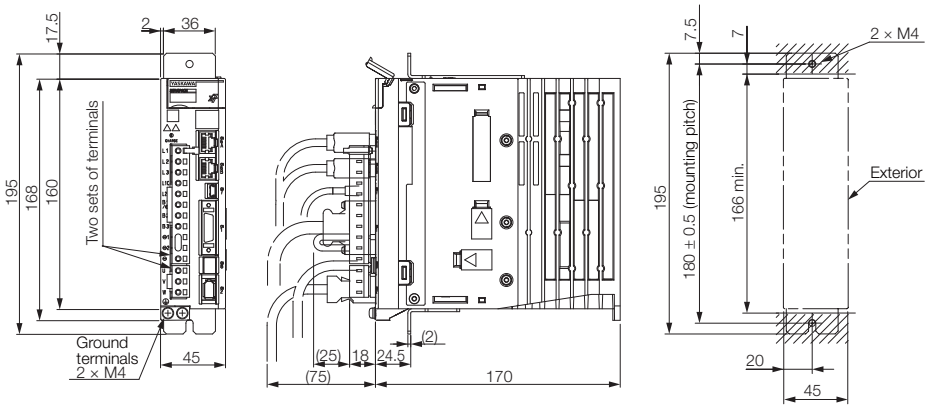

Mounting Hole Diagram

Approx. mass: 1.0 kg
Unit: mm

- Three-phase, 200 VAC: SGD7S-3R8A, -5R5A, and -7R6A; Single-phase, 100 VAC: SGD7S-2R8F

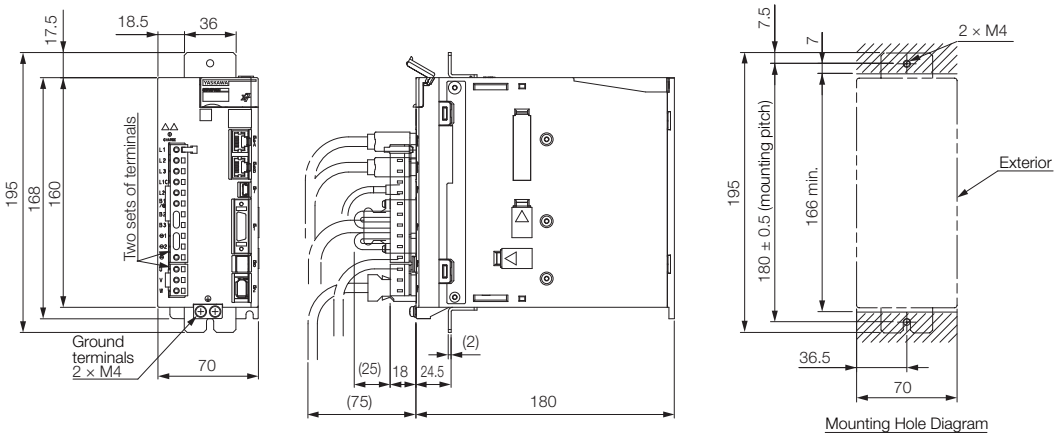

Mounting Hole Diagram

Approx. mass:1.6 kg
Unit: mm

- Three-phase, 200 VAC: SGD7S-120A

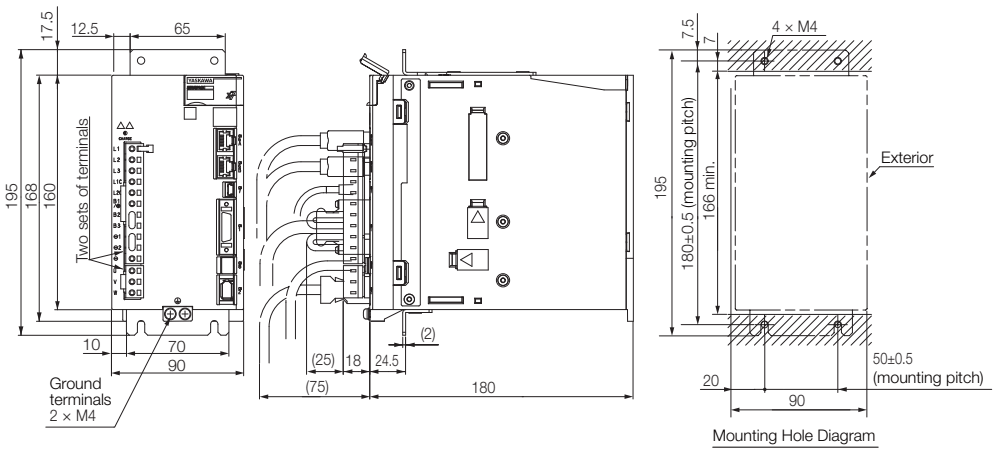

Mounting Hole Diagram

Approx. mass: 2.2 kg
Unit: mm

- Three-phase, 200 VAC: SGD7S-180A and -200A

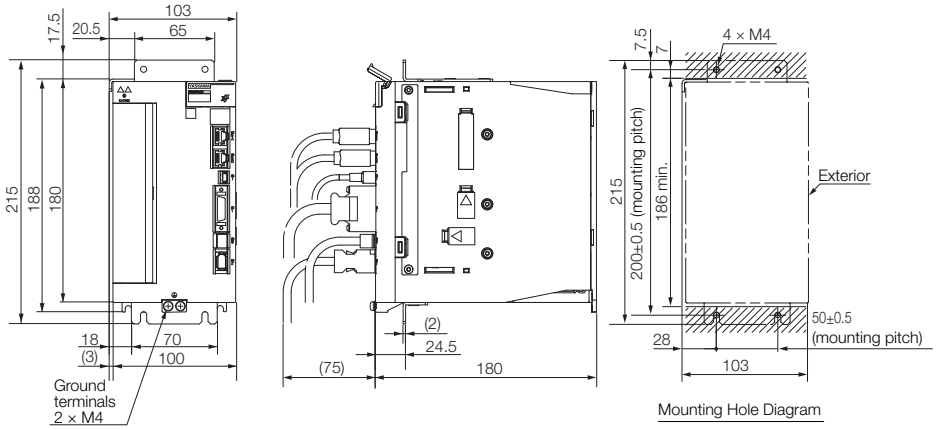

Approx. mass: 2.7 kg
Unit: mm

- Three-phase, 200 VAC: SGD7S-330A

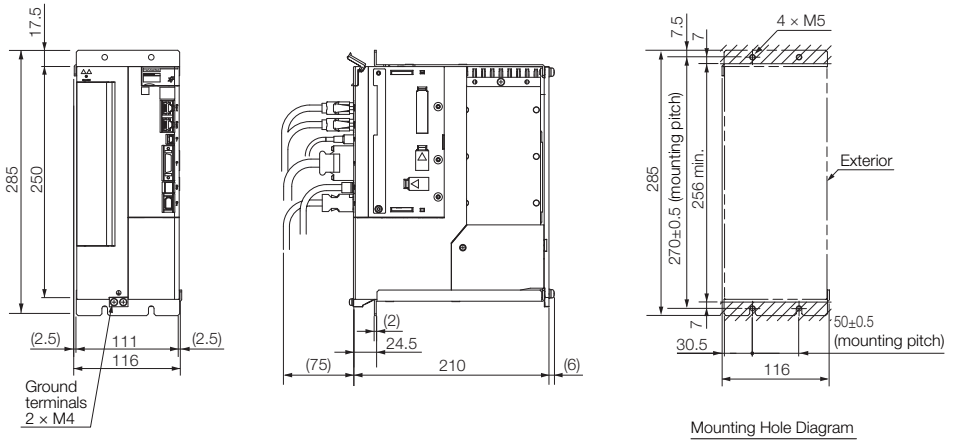

Approx. mass: 4.9 kg
Unit: mm

Duct-ventilated SERVOPACK

Hardware Option Code: 001

- Three-phase, 200 VAC: SGD7S-470A and -550A

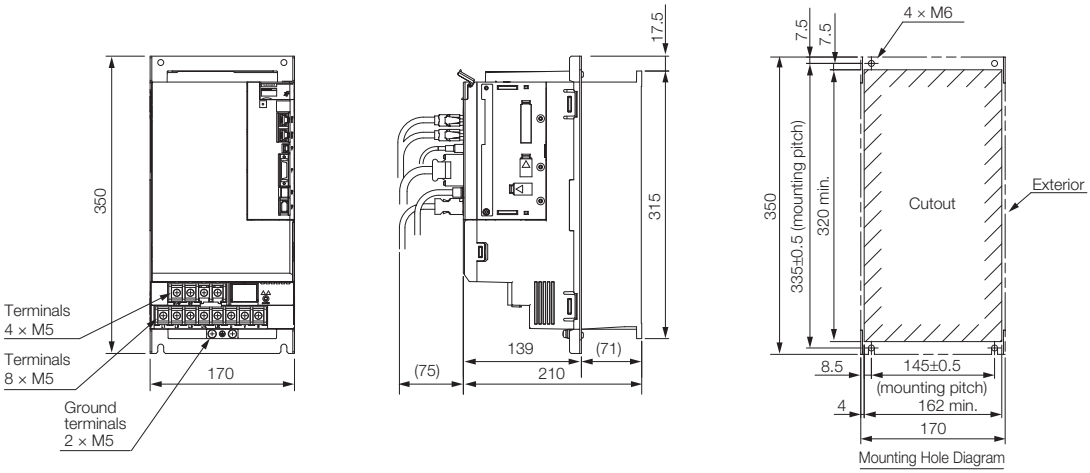

Approx. mass: 8.4 kg
Unit: mm

- Three-phase, 200 VAC: SGD7S-590A and -780A

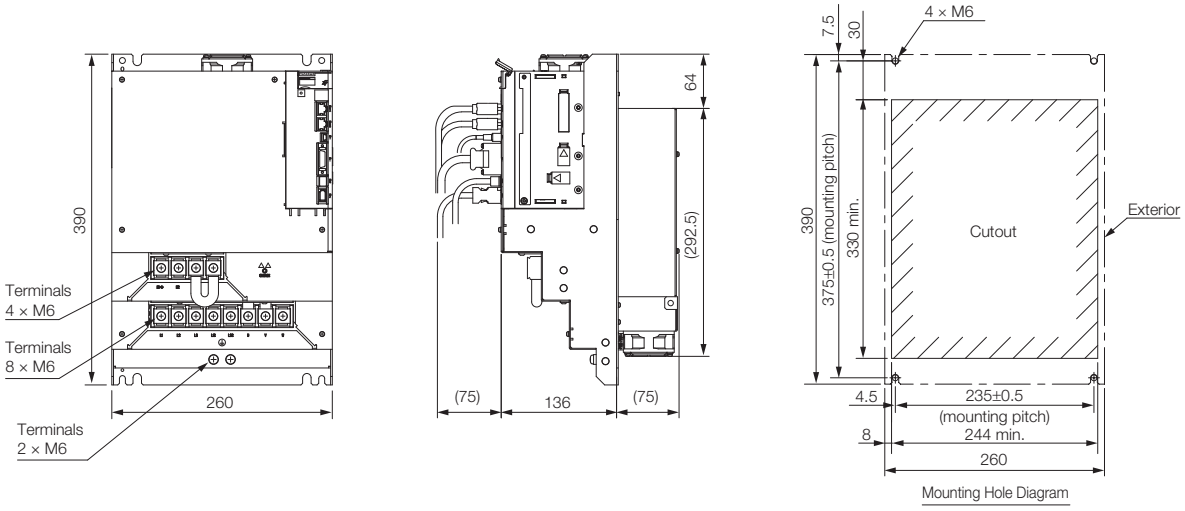

Approx. mass: 13.8 kg
Unit: mm

2.4 Examples of Standard Connections between SERVOPACKs and Peripheral Devices

- Rotary Servomotors

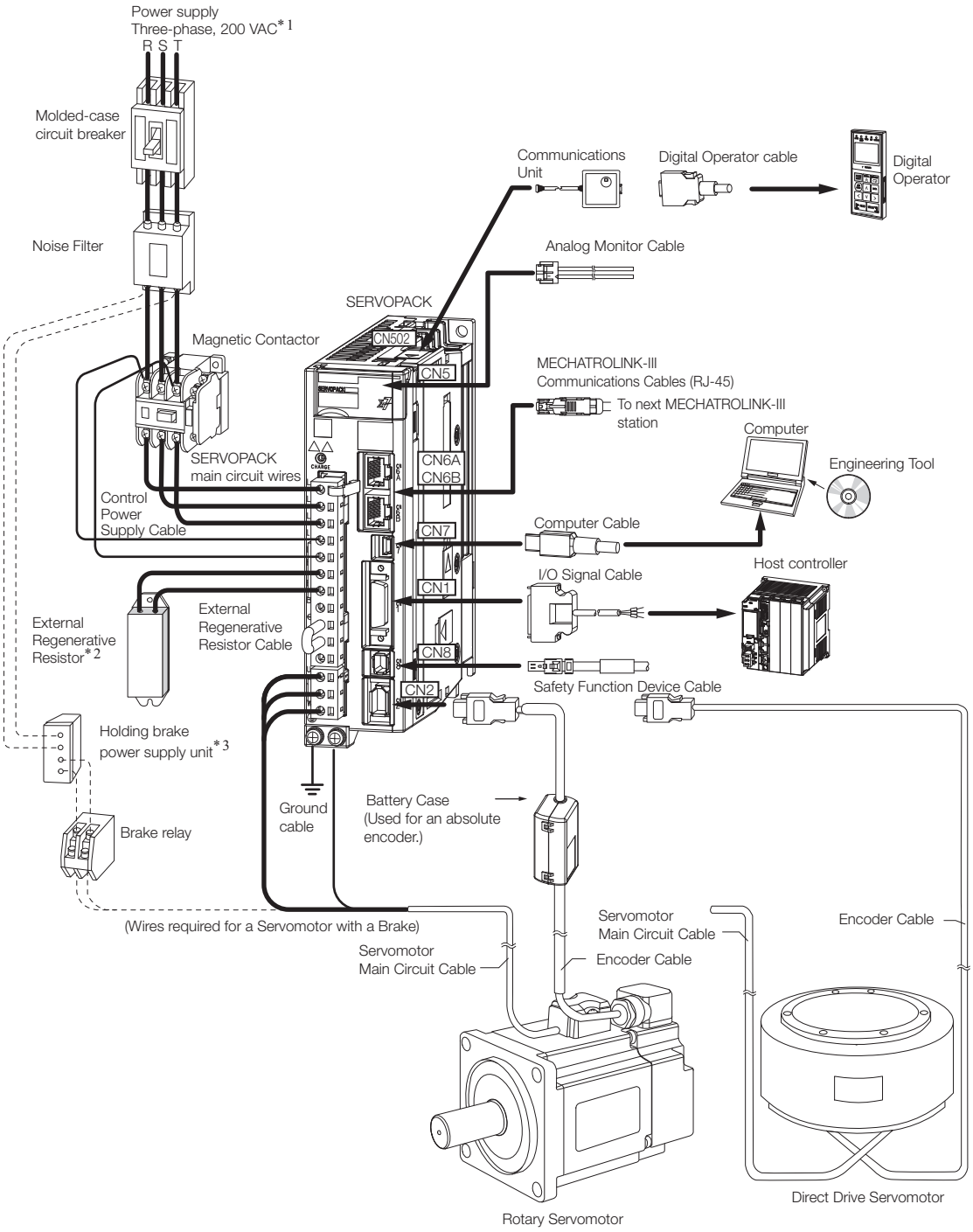

*1. This example is for a SERVOPACK with a three-phase, 200-VAC power supply input. The pin layout of the main circuit connector depends on the voltage.

*2. External Regenerative Resistors are not provided by Yaskawa.

*3. The power supply for the holding brake is not provided by Yaskawa. Select a power supply based on the holding brake specifications.
If you use a 24-V brake, install a separate power supply for the 24-VDC power supply from other power supplies, such as the one for the I/O signals of the CN1 connector.
If the power supply is shared, the I/O signals may malfunction.

- Linear Servomotors

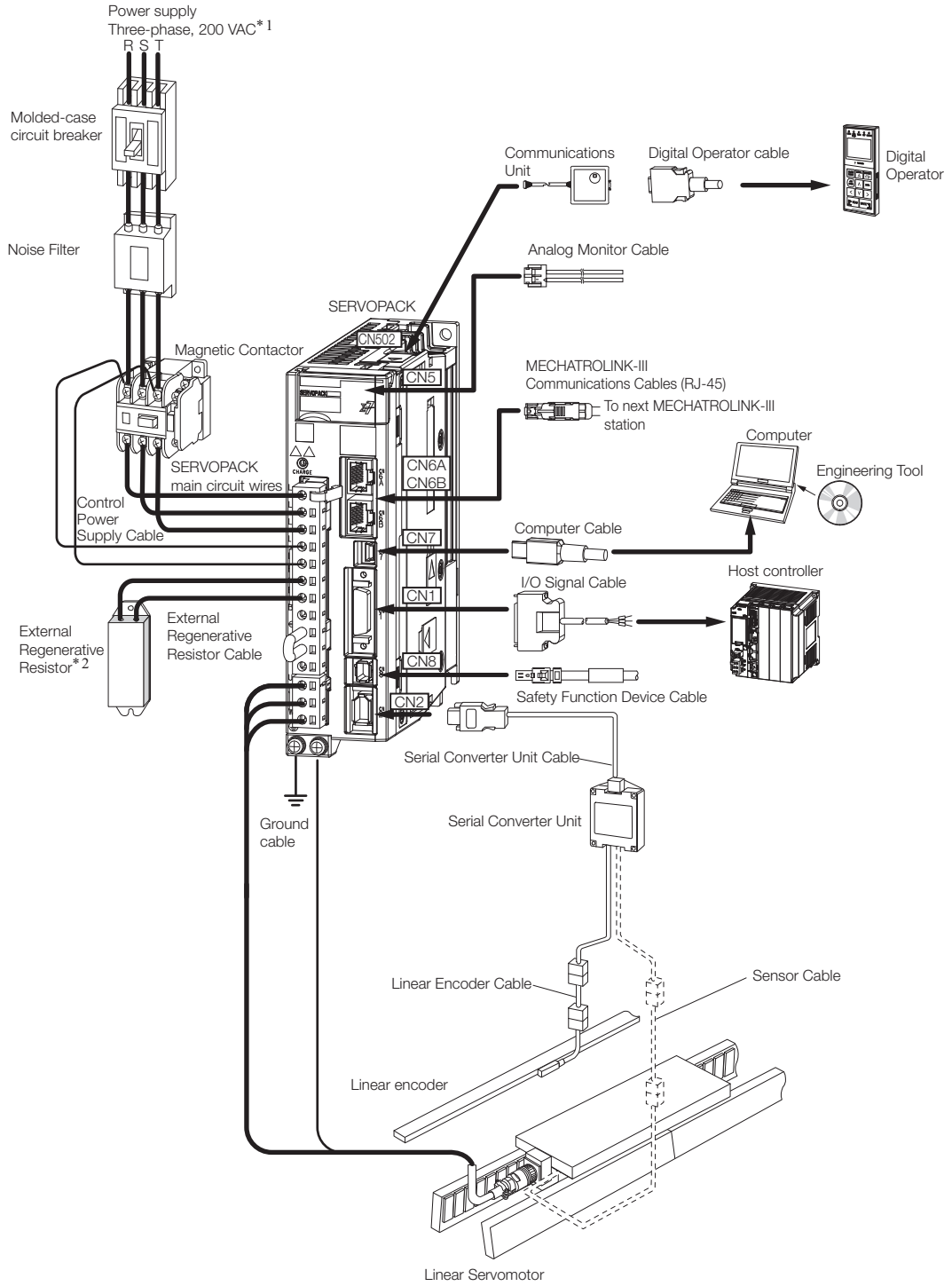

*1. This example is for a SERVOPACK with a three-phase, 200-VAC power supply input. The pin layout of the main circuit connector depends on the voltage.

*2. External Regenerative Resistors are not provided by Yaskawa.

SERVOPACK Installation

3

This chapter provides information on installing SERVOPACKs in the required locations.

3.1 Installation Precautions 3-2

3.2 Mounting Types and Orientation 3-3

3.3 Mounting Hole Dimensions 3-4

3.4 Mounting Interval 3-6

3.4.1 Installing One SERVOPACK in a Control Panel . . 3-6

3.4.2 Installing More Than One SERVOPACK in a Control Panel 3-6

3.5 Monitoring the Installation Environment . . . 3-7

3.6 Derating Specifications 3-8

3.7 EMC Installation Conditions 3-9

3.1 Installation Precautions

Refer to the following section for the ambient installation conditions.
☞ *2.1.3 Specifications* on page 2-6

■ Installation Near Sources of Heat

Implement measures to prevent temperature increases caused by radiant or convection heat from heat sources so that the ambient temperature of the SERVOPACK meets the ambient conditions.

■ Installation Near Sources of Vibration

Install a vibration absorber on the mounting surface of the SERVOPACK so that the SERVOPACK will not be subjected to vibration.

■ Other Precautions

Do not install the SERVOPACK in a location subject to high temperatures, high humidity, water drops, cutting oil, excessive dust, excessive dirt, excessive iron powder, corrosive gasses, or radioactivity.

3.2 Mounting Types and Orientation

The SERVOPACKs come in the following mounting types: base-mounted, rack-mounted, and duct-ventilated types. Regardless of the mounting type, mount the SERVOPACK vertically, as shown in the following figures.

Also, mount the SERVOPACK so that the front panel is facing toward the operator.

Note: Prepare two to four mounting holes for the SERVOPACK and mount it securely in the mounting holes. (The number of mounting holes depends on the capacity of the SERVOPACK.)

- Base-mounted SERVOPACK

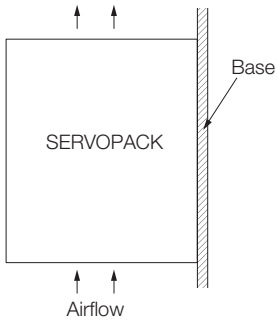

- Rack-mounted SERVOPACK

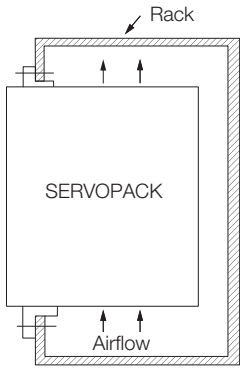

- Duct-ventilated SERVOPACK

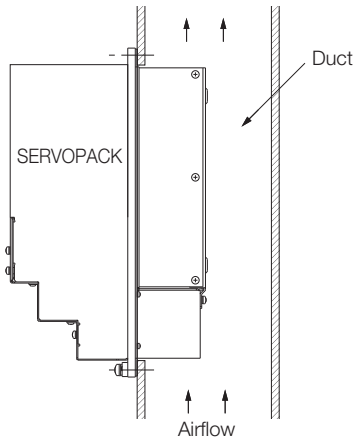

3.3 Mounting Hole Dimensions

Use mounting holes to securely mount the SERVOPACK to the mounting surface.

Note: To mount the SERVOPACK, you will need to prepare a screwdriver that is longer than the depth of the SERVOPACK.

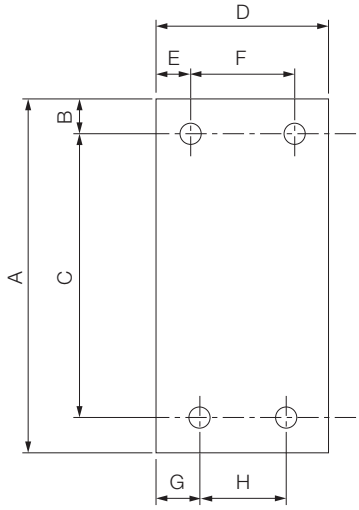

◆ Σ-7-series Mounting Hole Dimensions

SERVOPACK Model		Dimensions (mm)								Screw Size	Number of Screws
		A	B	C	D	E	F	G	H		
SGD7S-	R70A, R90A, 1R6A	168	5	160 ±0.5	45	35	–	25	–	M4	2
	2R8A, R70F, R90F, 2R1F	168	5	160 ±0.5	45	5	–	25	–	M4	2
	3R8A, 5R5A, 7R6A, 2R8F	168	5	160 ±0.5	70	6	58 ±0.5	64	–	M4	3
	120A	168	5	160 ±0.5	90	5	80 ±0.5	12.5	–	M4	3
	180A, 200A, 120A□□□008	188	5	180 ±0.5	100	95	–	12.5	75±0.5	M4	3
	330A	258	6	250±0.5	110	5	100±0.5	13	84±0.5	M5	4
	470A, 550A	315	6	302.5±0.5	170	14	142±0.5	14	142±0.5	M6	4
	590A, 780A	390	7.5	375±0.5	260	30	200±0.5	30	200±0.5	M6	4

◆ Σ-V-series-Compatible Mounting Hole Dimensions

If you are replacing a Σ-V-Series SERVOPACK with a Σ-7-Series SERVOPACK, you can also use the mounting holes that were used for the Σ-V-Series SERVOPACK. Refer to the following table.

SERVOPACK Model		Dimensions (mm)								Screw Size	Number of Screws
		A	B	C	D	E	F	G	H		
SGD7S-	R70A, R90A, 1R6A	168	5	150 ±0.5	45	35	–	35	–	M4	2
	2R8A, R70F, R90F, 2R1F	168	5	150 ±0.5	45	5	–	35	–	M4	2
	3R8A, 5R5A, 7R6A, 2R8F	168	5	150 ±0.5	70	6	58 ±0.5	6	–	M4	3
	120A	168	5	150 ±0.5	90	5	80 ±0.5	5	–	M4	3
	180A, 200A, 120A□□□008	188	5	170 ±0.5	100	95	–	5	90 ±0.5	M4	3
	330A	250	6	238.5±0.5	110	5	100±0.5	5	100±0.5	M5	4
	470A, 550A, 590A, 780A	A special attachment is required. Contact your Yaskawa representative for details.									

3.4 Mounting Interval

3.4.1 Installing One SERVOPACK in a Control Panel

Provide the following spaces around the SERVOPACK.

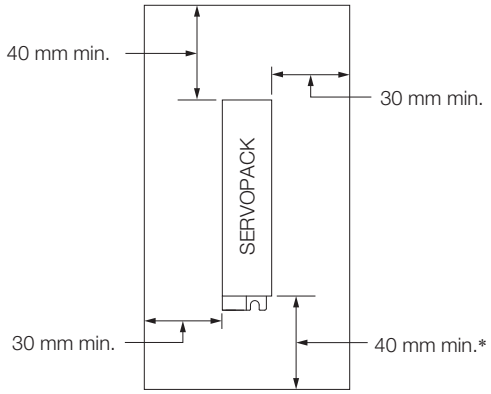

* For this dimension, ignore items protruding from the main body of the SERVOPACK.

3.4.2 Installing More Than One SERVOPACK in a Control Panel

Provide the following intervals between the SERVOPACKs and spaces around the SERVOPACKs.

> **Important**
> Install cooling fans above the SERVOPACKs so that hot spots do not occur around the SERVOPACKs. Provide sufficient intervals and spaces as shown in the following figure to enable cooling by the fans and natural convection.

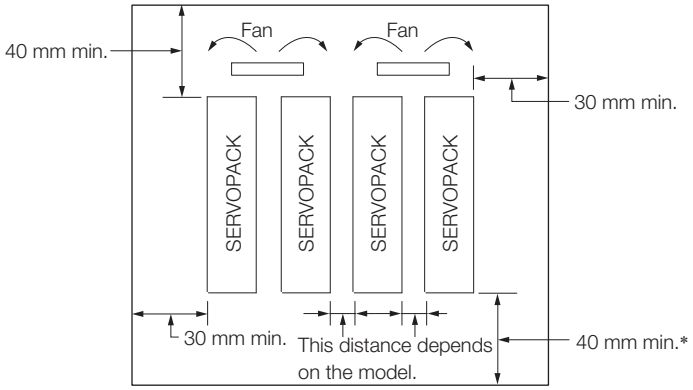

* For this dimension, ignore items protruding from the main body of the SERVOPACK.

The space required on the right side of a SERVOPACK (when looking at the SERVOPACK from the front) depends on the SERVOPACK models. Refer to the following table.

SERVOPACK Model		Space on Right Side	Cooling Fan Installation Conditions
			10 mm above SERVOPACK's Top Surface
SGD7S-	R70A, R90A, 1R6A, 2R8A, 3R8A, 5R5A, 7R6A, R70F, R90F, 2R1F, 2R8F	1 mm min.	Air speed: 0.5 m/s min.
	120A, 180A, 200A, 330A, 470A, 550A, 590A, 780A	10 mm min.	Air speed: 0.5 m/s min.

3.5 Monitoring the Installation Environment

You can use the SERVOPACK Installation Environment Monitor parameter to check the operating conditions of the SERVOPACK in the installation environment.

You can check the SERVOPACK installation environment monitor with either of the following methods.

- Using the SigmaWin+: ***Life Monitor - Installation Environment Monitor - SERVOPACK***
- Panel Operator or Digital Operator: Un025 (Installation Environment Monitor [%])

Implement one or more of the following actions if the monitor value exceeds 100%.

- Lower the surrounding temperature.
- Decrease the load.

Information

The value of the SERVOPACK Installation Environment Monitor parameter will increase by about 10% for each 10°C increase in the ambient temperature.

Important

Always observe the surrounding air temperature given in the SERVOPACK environment conditions. Even if the monitor value is 100% or lower, you cannot use a SERVOPACK in a location that exceeds the specified surrounding air temperature.

3.6 Derating Specifications

If you use the SERVOPACK at a surrounding air temperature of 55°C to 60°C or at an altitude of 1,000 m to 2,000 m, you must apply the derating rates given in the following graphs.

- SGD7S-R70A, -R90A, -1R6A, -2R8A, -R70F, -R90F, -2R1F, and -2R8F

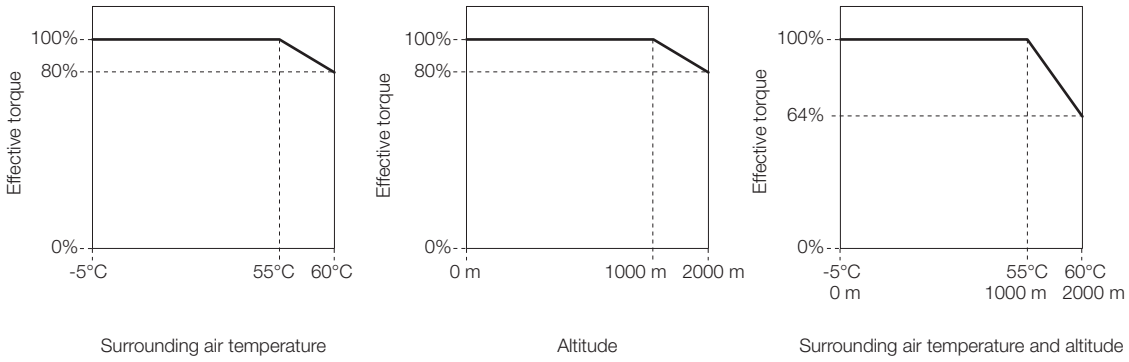

- SGD7S-3R8A, -5R5A, -7R6A, -120A, -180A, -200A, -330A, -470A, -550A, -590A, and -780A

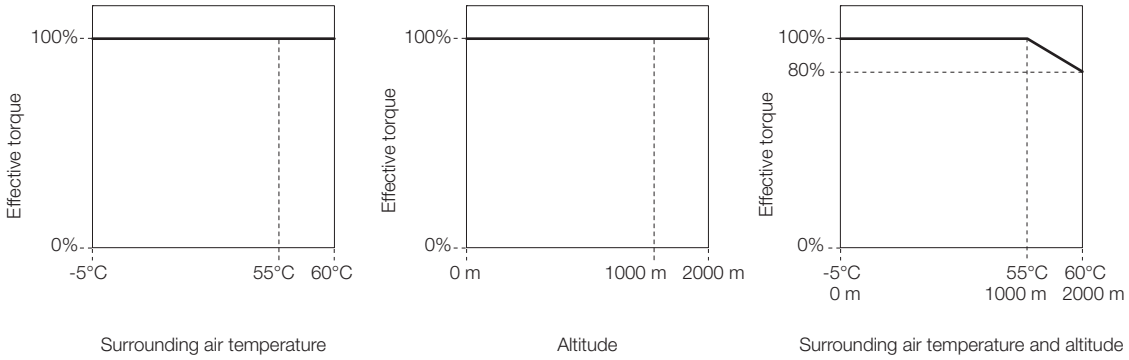

3.7 EMC Installation Conditions

This section gives the installation conditions that were used for EMC certification testing.

The EMC installation conditions that are given here are the conditions that were used to pass testing criteria at Yaskawa. The EMC level may change under other conditions, such as the actual installation structure and wiring conditions. These Yaskawa products are designed to be built into equipment. Therefore, you must implement EMC measures and confirm compliance for the final equipment.

The applicable standards are EN 55011 group 1 class A, EN 61000-6-2, EN 61000-6-4, and EN 61800-3 (category C2, second environment).

- Three-Phase, 200 VAC

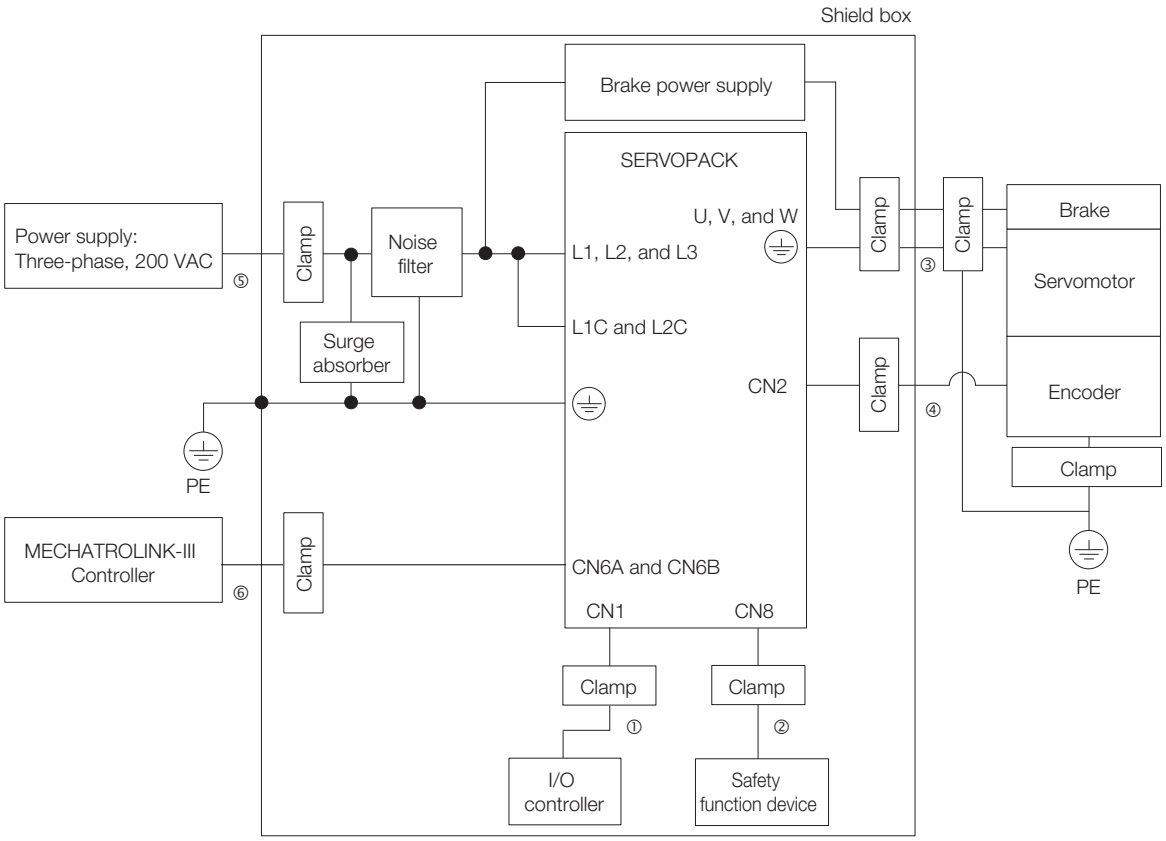

Symbol	Cable Name	Specification
①	I/O Signal Cable	Shielded cable
②	Safety Function Device Cable	Shielded cable
③	Servomotor Main Circuit Cable	Shielded cable
④	Encoder Cable	Shielded cable
⑤	Main Circuit Power Cable	Shielded cable
⑥	MECHATROLINK-III Communications Cable (RJ-45)	Shielded cable

- Single-Phase, 200 VAC

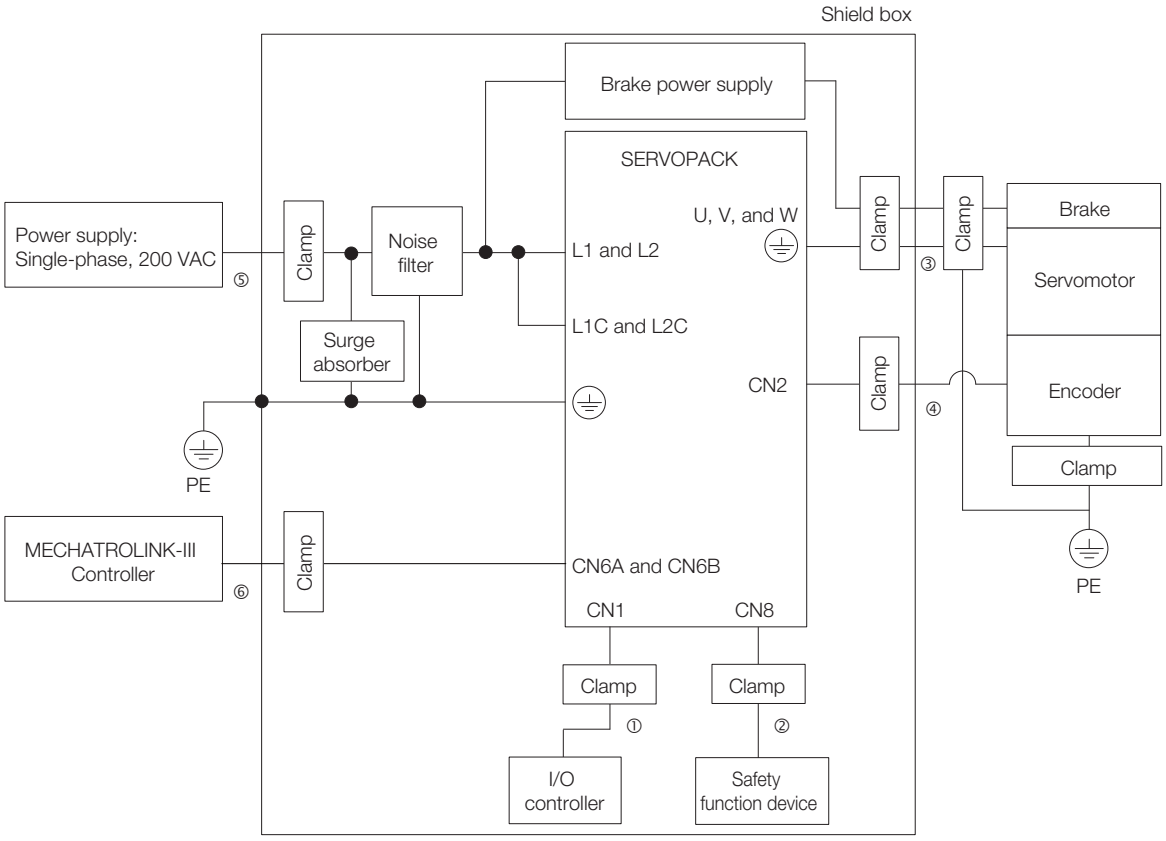

Symbol	Cable Name	Specification
①	I/O Signal Cable	Shielded cable
②	Safety Function Device Cable	Shielded cable
③	Servomotor Main Circuit Cable	Shielded cable
④	Encoder Cable	Shielded cable
⑤	Main Circuit Power Cable	Shielded cable
⑥	MECHATROLINK-III Communications Cable (RJ-45)	Shielded cable

- Single-Phase, 100 VAC

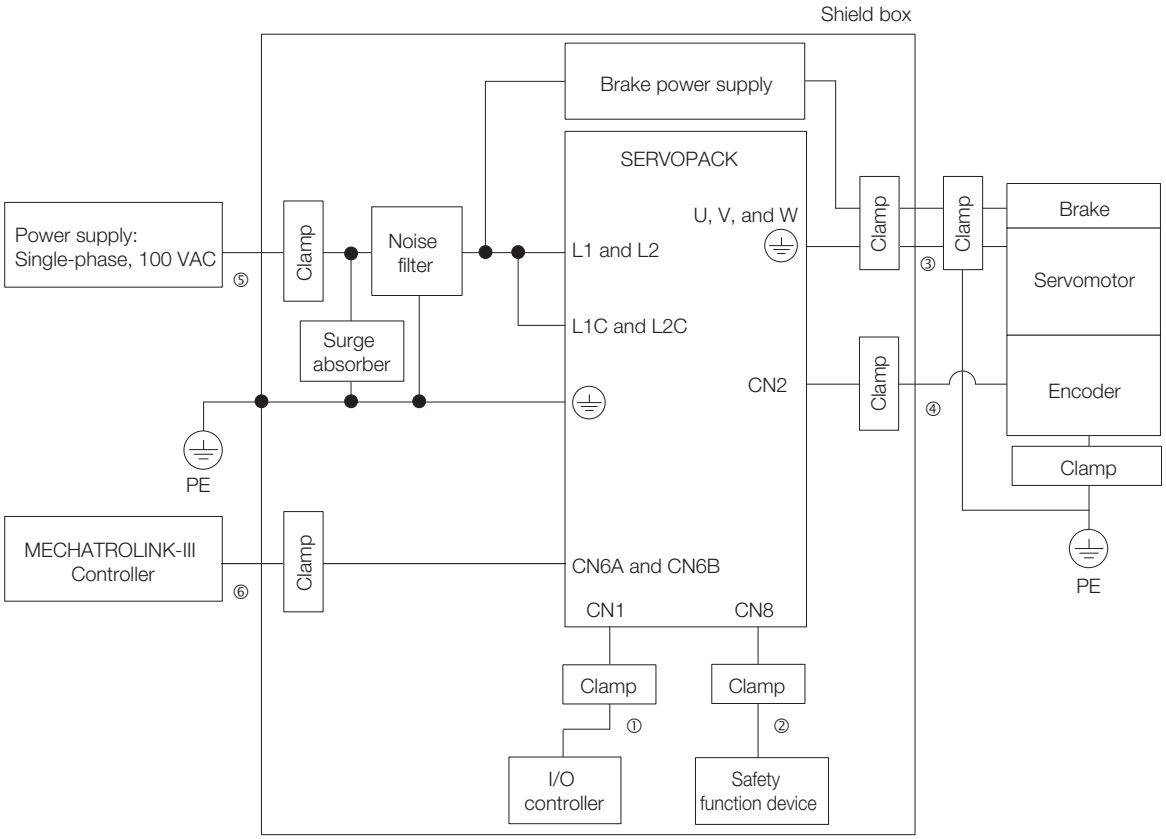

Symbol	Cable Name	Specification
①	I/O Signal Cable	Shielded cable
②	Safety Function Device Cable	Shielded cable
③	Servomotor Main Circuit Cable	Shielded cable
④	Encoder Cable	Shielded cable
⑤	Main Circuit Power Cable	Shielded cable
⑥	MECHATROLINK-III Communications Cable (RJ-45)	Shielded cable

Wiring and Connecting SERVOPACKs

4

This chapter provides information on wiring and connecting SERVOPACKs to power supplies and peripheral devices.

4.1 Wiring and Connecting SERVOPACKs 4-3

4.1.1 General Precautions 4-3
4.1.2 Countermeasures against Noise 4-5
4.1.3 Grounding 4-8

4.2 Basic Wiring Diagrams 4-9

4.3 Wiring the Power Supply to the SERVOPACK . . 4-11

4.3.1 Terminal Symbols and Terminal Names 4-11
4.3.2 Wiring Procedure for Main Circuit Connector . . 4-13
4.3.3 Power ON Sequence 4-14
4.3.4 Power Supply Wiring Diagrams 4-16
4.3.5 Wiring Regenerative Resistors 4-22
4.3.6 Wiring Reactors for Harmonic Suppression 4-24

4.4 Wiring Servomotors 4-25

4.4.1 Terminal Symbols and Terminal Names 4-25
4.4.2 Pin Arrangement of Encoder Connector (CN2) . 4-25
4.4.3 Wiring the SERVOPACK to the Encoder 4-26
4.4.4 Wiring the SERVOPACK to the Holding Brake . . 4-33

4.5 I/O Signal Connections 4-34

4.5.1 I/O Signal Connector (CN1) Names and Functions 4-34
4.5.2 I/O Signal Connector (CN1) Pin Arrangement . . 4-36
4.5.3 I/O Signal Wiring Examples 4-37
4.5.4 I/O Circuits 4-39

4.6 Connecting Safety Function Signals 4-41
4.6.1 Pin Arrangement of Safety Function Signals (CN8) . . 4-41
4.6.2 I/O Circuits 4-41

4.7 Connecting MECHATROLINK-III Communications Cables (RJ-45) . . 4-43

4.8 Connecting the Other Connectors 4-44
4.8.1 Serial Communications Connector (CN502) 4-44
4.8.2 Computer Connector (CN7) 4-44
4.8.3 Analog Monitor Connector (CN5) 4-45

4.1 Wiring and Connecting SERVOPACKs

4.1.1 General Precautions

DANGER

- Do not change any wiring while power is being supplied.
  There is a risk of electric shock or injury.

WARNING

- Wiring and inspections must be performed only by qualified engineers.
  There is a risk of electric shock or product failure.
- Check all wiring and power supplies carefully.
  Incorrect wiring or incorrect voltage application to the output circuits may cause short-circuit failures. If a short-circuit failure occurs as a result of any of these causes, the holding brake will not work. This could damage the machine or cause an accident that may result in death or injury.
- Connect the AC and DC power supplies to the specified SERVOPACK terminals.
  - Connect an AC power supply to the L1, L2, and L3 terminals and the L1C and L2C terminals on the SERVOPACK.
  - Connect a DC power supply to the B1/⊕ and ⊖2 terminals and the L1C and L2C terminals on the SERVOPACK.

  There is a risk of failure or fire.
- If you use a SERVOPACK with the Dynamic Brake Hardware Option, connect an External Dynamic Brake Resistor that is suitable for the machine and equipment specifications to the specified terminals.
  There is a risk of unexpected operation, machine damage, burning, or injury when an emergency stop is performed.

⚠ CAUTION

- Wait for at least six minutes after turning OFF the power supply (with a SERVOPACK for a 100-VAC input, wait for at least nine minutes) and then make sure that the CHARGE indicator is not lit before starting wiring or inspection work. Do not touch the power supply terminals while the CHARGE lamp is lit after turning OFF the power supply because high voltage may still remain in the SERVOPACK.
  There is a risk of electric shock.
- Observe the precautions and instructions for wiring and trial operation precisely as described in this document.
  Failures caused by incorrect wiring or incorrect voltage application in the brake circuit may cause the SERVOPACK to fail, damage the equipment, or cause an accident resulting in death or injury.
- Check the wiring to be sure it has been performed correctly.
  Connectors and pin layouts are sometimes different for different models. Always confirm the pin layouts in technical documents for your model before operation.
  There is a risk of failure or malfunction.
- Connect wires to power supply terminals and motor connection terminals securely with the specified methods and tightening torque.
  Insufficient tightening may cause wires and terminal blocks to generate heat due to faulty contact, possibly resulting in fire.
- Use shielded twisted-pair cables or screened unshielded multi-twisted-pair cables for I/O Signal Cables and Encoder Cables.
- The maximum wiring length is 3 m for I/O Signal Cables, and 50 m for Encoder Cables or Servomotor Main Circuit Cables.
- Observe the following precautions when wiring the SERVOPACK's main circuit terminals.
  - Turn ON the power supply to the SERVOPACK only after all wiring, including the main circuit terminals, has been completed.
  - If a connector is used for the main circuit terminals, remove the main circuit connector from the SERVOPACK before you wire it.
  - Insert only one wire per insertion hole in the main circuit terminals.
  - When you insert a wire, make sure that the conductor wire (e.g., whiskers) does not come into contact with adjacent wires.
- Install molded-case circuit breakers and other safety measures to provide protection against short circuits in external wiring.
  There is a risk of fire or failure.

NOTICE

- Whenever possible, use the Cables specified by Yaskawa.
  If you use any other cables, confirm the rated current and application environment of your model and use the wiring materials specified by Yaskawa or equivalent materials.
- Securely tighten cable connector screws and lock mechanisms.
  Insufficient tightening may result in cable connectors falling off during operation.
- Do not bundle power lines (e.g., the Main Circuit Cable) and low-current lines (e.g., the I/O Signal Cables or Encoder Cables) together or run them through the same duct. If you do not place power lines and low-current lines in separate ducts, separate them by at least 30 cm.
  If the cables are too close to each other, malfunctions may occur due to noise affecting the low-current lines.
- Install a battery at either the host controller or on the Encoder Cable.
  If you install batteries both at the host controller and on the Encoder Cable at the same time, you will create a loop circuit between the batteries, resulting in a risk of damage or burning.
- When connecting a battery, connect the polarity correctly.
  There is a risk of battery rupture or encoder failure.

Important

- Use a molded-case circuit breaker or fuse to protect the main circuit. The SERVOPACK connects directly to a commercial power supply; it is not isolated through a transformer or other device. Always use a molded-case circuit breaker or fuse to protect the servo system from accidents involving different power system voltages or other accidents.
- Install an earth leakage breaker. The SERVOPACK does not have a built-in ground fault protective circuit. To configure a safer system, install a ground fault detector against overloads and short-circuiting, or install a ground fault detector combined with a molded-case circuit breaker.
- Do not turn the power supply ON and OFF more than necessary.
  - Do not use the SERVOPACK for applications that require the power supply to turn ON and OFF frequently. Such applications will cause elements in the SERVOPACK to deteriorate.
  - After you have started actual operation, allow at least one hour between turning the power supply ON and OFF (as a guideline).

To ensure safe, stable application of the servo system, observe the following precautions when wiring.

- Use the cables specified by Yaskawa. Design and arrange the system so that each cable is as short as possible.
  Refer to the following manual or catalog for information on the specified cables.
  AC Servo Drives Σ-7 Series (Catalog No.: KAEP S800001 23)
  Σ-7-Series Peripheral Device Selection Manual (Manual No.: SIEP S800001 32)
- The signal cable conductors are as thin as 0.2 mm^2 or 0.3 mm^2. Do not subject them to excessive bending stress or tension.

4.1.2 Countermeasures against Noise

Important

The SERVOPACK is designed as an industrial device. It therefore provides no measures to prevent radio interference. The SERVOPACK uses high-speed switching elements in the main circuit. Therefore peripheral devices may be affected by switching noise.
If the equipment is to be used near private houses or if radio interference is a problem, take countermeasures against noise.

The SERVOPACK uses microprocessors. Therefore, it may be affected by switching noise from peripheral devices.

To prevent the noise from the SERVOPACK or the peripheral devices from causing malfunctions of any devices, take the following countermeasures against noise as required.

- Install the input reference device and Noise Filter as close to the SERVOPACK as possible.
- Always install a Surge Absorber for relays, solenoids, and Magnetic Contactor coils.
- Do not place the following cables in the same duct or bundle them together. Also, separate the cables from each other by at least 30 cm.
  •Main Circuit Cables and I/O Signal Cables
  •Main Circuit Cables and Encoder Cables
- Do not share the power supply with an electric welder or electrical discharge machine. If the SERVOPACK is placed near a high-frequency generator, install Noise Filters on the input side on the Main Circuit Power Supply Cable and Control Power Supply Cable even if the same power supply is not shared with the high-frequency generator. Refer to the following section for information on connecting Noise Filters.
  Noise Filters on page 4-6
- Implement suitable grounding measures. Refer to the following section for information on grounding measures.
  4.1.3 Grounding on page 4-8

Noise Filters

You must attach Noise Filters in appropriate places to protect the SERVOPACK from the adverse effects of noise. The following is an example of wiring for countermeasures against noise.

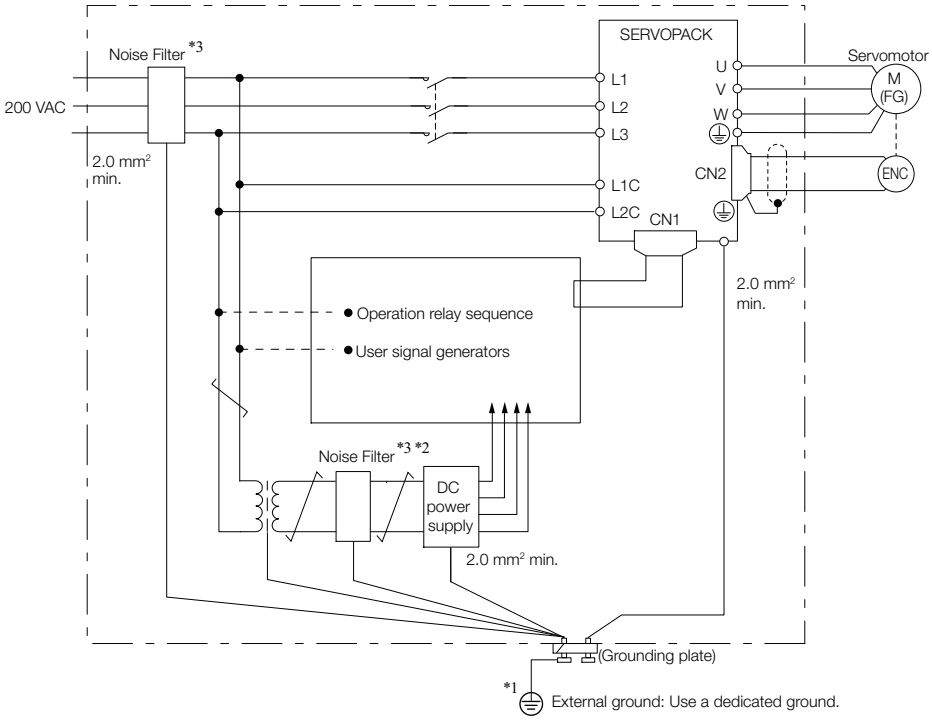

*1. For the ground wire, use a wire with a thickness of at least 2.0 mm² (preferably, flat braided copper wire).

*2. Whenever possible, use twisted-pair wires to wire all connections marked with ⊿.

*3. Refer to the following section for precautions when using Noise Filters.
☞ *Noise Filter Wiring and Connection Precautions* on page 4-7

Noise Filter Wiring and Connection Precautions

Always observe the following precautions when wiring or connecting Noise Filters.

- Separate input lines from output lines. Do not place input lines and output lines in the same duct or bundle them together.

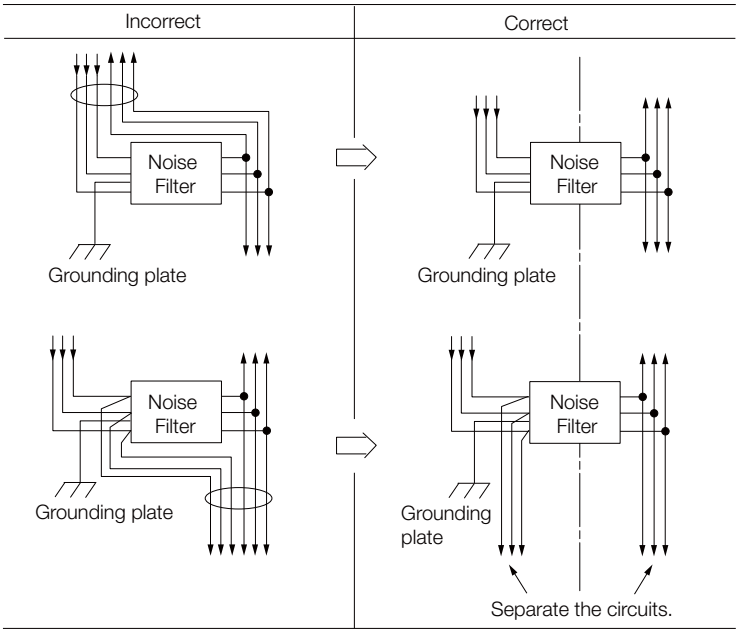

- Separate the Noise Filter ground wire from the output lines. Do not place the Noise Filter ground wire, output lines, and other signal lines in the same duct or bundle them together.

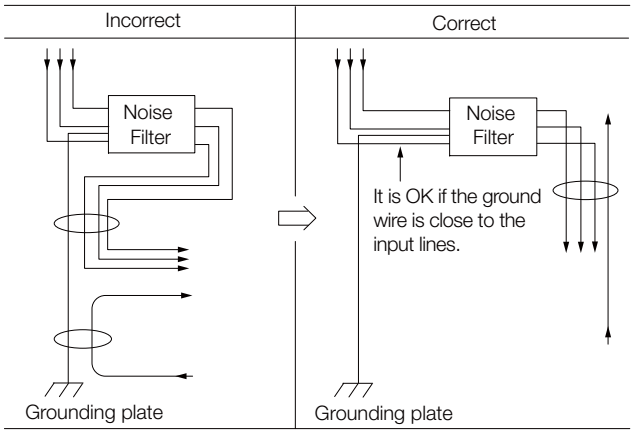

- Connect the Noise Filter ground wire directly to the grounding plate. Do not connect the Noise Filter ground wire to other ground wires.

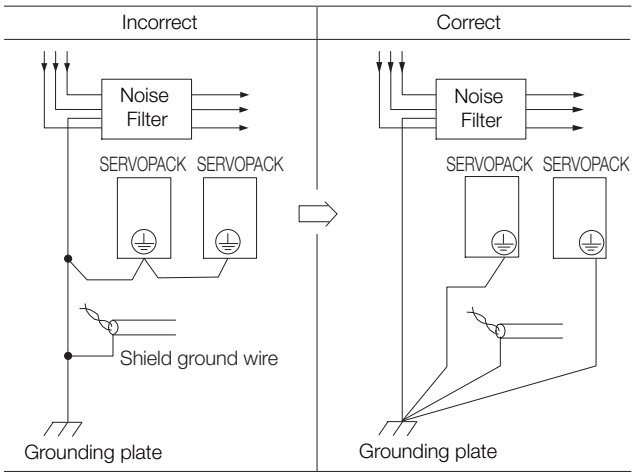

- If a Noise Filter is located inside a control panel, first connect the Noise Filter ground wire and the ground wires from other devices inside the control panel to the grounding plate for the control panel, then ground the plate.

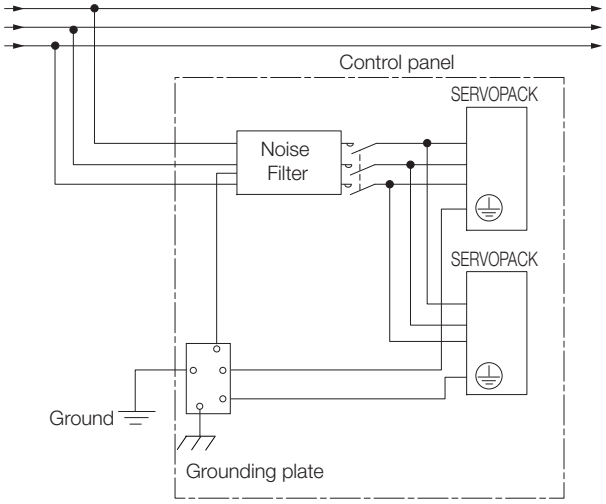

4.1.3 Grounding

Implement grounding measures as described in this section. Implementing suitable grounding measures will also help prevent malfunctions, which can be caused by noise.

Observe the following precautions when wiring the ground cable.

- Ground the SERVOPACK to a resistance of 100 Ω or less.
- Be sure to ground at one point only.
- Ground the Servomotor directly if the Servomotor is insulated from the machine.

Motor Frame Ground or Motor Ground

If you ground the Servomotor through the machine, switching noise current can flow from the main circuit of the SERVOPACK through the stray capacitance of the Servomotor. To prevent this, always connect the FG terminal of the Servomotor Main Circuit Cable connected to the Servomotor to the ground terminal ⏚ on the SERVOPACK. Also be sure to ground the ground terminal ⏚. Always connect the shield wire of the Encoder Cable connected to the Servomotor to the connector case (shell).

Ground both the Moving Coil and Magnetic Way of a Linear Servomotor.

Noise on I/O Signal Cables

If noise enters the I/O Signal Cable, connect the shield of the I/O Signal Cable to the connector shell to ground it. If the Servomotor Main Circuit Cable is placed in a metal conduit, ground the conduit and its junction box. For all grounding, ground at one point only.

4.2 Basic Wiring Diagrams

This section provide the basic wiring diagrams. Refer to the reference sections given in the diagrams for details.

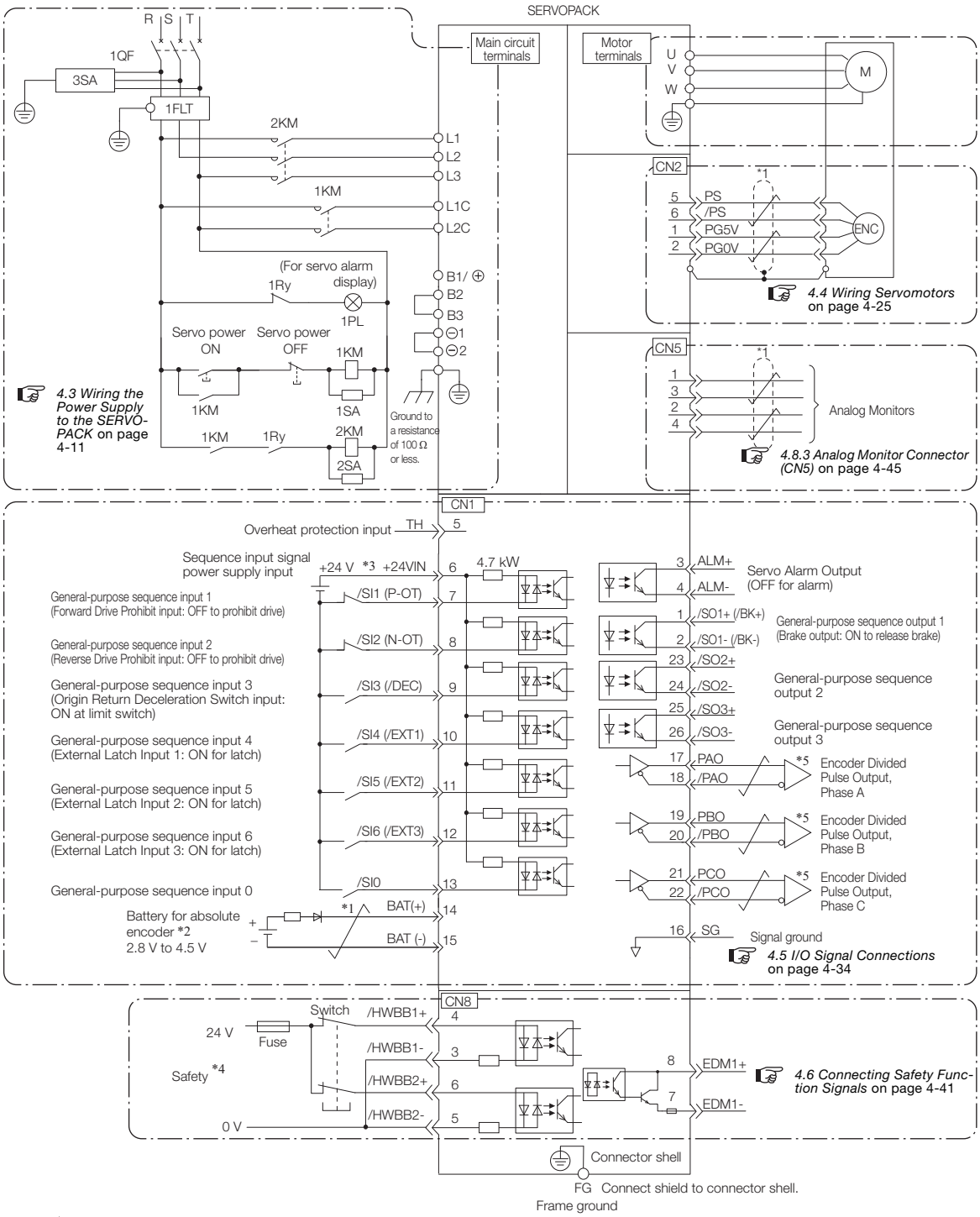

*1. represents twisted-pair wires.

*2. Connect these when using an absolute encoder. If the Encoder Cable with a Battery Case is connected, do not connect a backup battery.

*3. The 24-VDC power supply is not provided by Yaskawa. Use a 24-VDC power supply with double insulation or reinforced insulation.

*4. Refer to the following chapter if you use a safety function device.
Chapter 11 Safety Functions

If you do not use the safety function, insert the Safety Jumper Connector (provided as an accessory) into CN8 when you use the SERVOPACK.

*5. Always use line receivers to receive the output signals.

Note: 1. You can use parameters to change the functions allocated to the /DEC, P-OT, N-OT, /EXT1, /EXT2, and /EXT3 input signals and the /SO1, /SO2, and /SO3 output signals. Refer to the following section for details.

☞ *6.1 I/O Signal Allocations* on page 6-4

2. If you use a 24-V brake, install a separate power supply for the 24-VDC power supply from other power supplies, such as the one for the I/O signals of the CN1 connector. If the power supply is shared, the I/O signals may malfunction.
3. Default settings are given in parentheses.

4.3 Wiring the Power Supply to the SERVOPACK

4.3.1 Terminal Symbols and Terminal Names

Refer to the following manual or catalog for information on cables and peripheral devices.

AC Servo Drives Σ-7 Series (Catalog No.: KAEP S800001 23)

Σ-7-Series Peripheral Device Selection Manual (Manual No.: SIEP S800001 32)

⚠ CAUTION

- Wire all connections correctly according to the following table and specified reference information. There is a risk of SERVOPACK failure or fire if incorrect wiring is performed.

The SERVOPACKs have the following four types of main circuit power supply input specifications.

Information
1. For the single-phase, 100 VAC power supply input specification, only a single-phase AC power supply can be connected to the control power supply terminals.
2. For the other main circuit power supply input specifications, excluding the single-phase, 100 VAC power supply input specification, a single-phase AC power supply or a DC power supply can be connected to the control power supply terminals.

- Three-Phase, 200-VAC Power Supply Input

Terminal Symbols	Terminal Name	Specifications and Reference	
L1, L2, L3	Main circuit power supply input terminals for AC power supply input	Three-phase, 200 VAC to 240 VAC, -15% to +10%, 50 Hz/60 Hz	
L1C, L2C	Control power supply terminals	AC power supply	Single-phase, 200 VAC to 240 VAC, -15% to +10%, 50 Hz/60 Hz
		DC power supply	L1C: 270 VDC to 324 VDC, -15% to +10%, L2C: 0 VDC or L2C: 270 VDC to 324 VDC, -15% to +10%, L1C: 0 VDC
B1/⊕, B2, B3	Regenerative Resistor terminals	*4.3.5 Wiring Regenerative Resistors* on page 4-22	
		• For SGD7S-R70A, -R90A, -1R6A, and -2R8A If the regenerative capacity is insufficient, connect an External Regenerative Resistor between B1/⊕ and B2. The External Regenerative Resistor is not included. Obtain it separately.	
		• For SGD7S-3R8A,- 5R5A, -7R6A, -120A, -180A, -200A, and -330A If the internal regenerative resistor is insufficient, remove the lead or short bar between B2 and B3 and connect an External Regenerative Resistor between B1/⊕ and B2. The External Regenerative Resistor is not included. Obtain it separately.	
		• For SGD7S-470A, -550A, -590A, and -780A Connect a Regenerative Resistor Unit between B1/⊕ and B2. Obtain a Regenerative Resistor Unit separately. These models do not have a B3 terminal.	
⊖1, ⊖2	DC Reactor terminals for power supply harmonic suppression	*4.3.6 Wiring Reactors for Harmonic Suppression* on page 4-24	
		These terminals are used to connect a DC Reactor for power supply harmonic suppression or power factor improvement.	
⊖	–	None. (Do not connect anything to this terminal.)	

- Single-Phase, 200-VAC Power Supply Input

Terminal Symbols	Terminal Name	Specifications and Reference	
L1, L2	Main circuit power supply input terminals for AC power supply input	Single-phase, 200 VAC to 240 VAC, -15% to +10%, 50 Hz/60 Hz	
L1C, L2C	Control power supply terminals	AC power supply	Single-phase, 200 VAC to 240 VAC, -15% to +10%, 50 Hz/60 Hz
		DC power supply	L1C: 270 VDC to 324 VDC, -15% to +10%, L2C: 0 VDC or L2C: 270 VDC to 324 VDC, -15% to +10%, L1C: 0 VDC
B1/⊕, B2, B3	Regenerative Resistor terminals	☞ *4.3.5 Wiring Regenerative Resistors* on page 4-22	
		■ For SGD7S-R70A, -R90A, -1R6A, and -2R8A If the regenerative capacity is insufficient, connect an External Regenerative Resistor between B1/⊕ and B2. The External Regenerative Resistor is not included. Obtain it separately.	
		■ For SGD7S-5R5A and 120A□0A008 If the internal regenerative resistor is insufficient, remove the lead or short bar between B2 and B3 and connect an External Regenerative Resistor between B1/⊕ and B2. The External Regenerative Resistor is not included. Obtain it separately.	
⊖1, ⊖2	DC Reactor terminals for power supply harmonic suppression	☞ *4.3.6 Wiring Reactors for Harmonic Suppression* on page 4-24 These terminals are used to connect a DC Reactor for power supply harmonic suppression or power factor improvement.	
L3, ⊖	–	None. (Do not connect anything to these terminals.)	

You can use a single-phase, 200-V power supply input with the following models.

- SGD7S-R70A, -R90A, -1R6A, -2R8A, -5R5A

If you use a single-phase, 200-VAC power supply input for the SERVOPACK's main circuit power supply, set parameter Pn00B to n.□1□□ (Use a three-phase power supply input as a single-phase power supply input). Refer to the following section for details.

☞ *5.3.2 Single-phase AC Power Supply Input/Three-phase AC Power Supply Input Setting* on page 5-15

Information You do not need to change the setting of Pn00B to n.□1□□ (Use a three-phase power supply input as a single-phase power supply input) for a SERVOPACK with a single-phase 200-VAC power supply input (model numbers: SGD7S-120A□□□008).

- DC Power Supply Input

Terminal Symbols	Terminal Name	Specifications and Reference	
L1C, L2C	Control power supply terminals	AC power supply	Single-phase, 200 VAC to 240 VAC, -15% to +10%, 50 Hz/60 Hz
		DC power supply	L1C: 270 VDC to 324 VDC, -15% to +10%, L2C: 0 VDC or L2C: 270 VDC to 324 VDC, -15% to +10%, L1C: 0 VDC
B1/⊕	Main circuit power supply input terminals for DC power supply input	270 VDC to 324 VDC, -15% to +10%	
⊖2		0 VDC	
L1, L2, L3, B2, B3, ⊖1, ⊖	–	None. (Do not connect anything to these terminals.) Note: 1. SGD7S-470A to 780A do not have a B3 terminal. 2. SGD7S-330A to 780A do not have a ⊖ terminal.	

If you use a DC power supply input to the SERVOPACK, make sure to set parameter Pn00E to n.□□□1 (DC power supply input supported) before inputting the power supply. Refer to the following section for details.

☞ *5.3.1 AC Power Supply Input/DC Power Supply Input Setting* on page 5-14

- Single-Phase, 100-VAC Power Supply Input

Terminal Symbols	Terminal Name	Specifications and Reference
L1, L2	Main circuit power supply input terminals for AC power supply input	Single-phase, 100 VAC to 120 VAC, -15% to +10%, 50 Hz/60 Hz
L1C, L2C	Control power supply terminals	Single-phase, 100 VAC to 120 VAC, -15% to +10%, 50 Hz/60 Hz
B1, B2	Regenerative Resistor terminals	*4.3.5 Wiring Regenerative Resistors* on page 4-22
		If the regenerative capacity is insufficient, connect an External Regenerative Resistor between B1/⊕ and B2. The External Regenerative Resistor is not included. Obtain it separately.

You can use a single-phase, 100-VAC power supply input with the following models.
- SGD7S-R70F, -R90F, -2R1F, and -2R8F

4.3.2 Wiring Procedure for Main Circuit Connector

- Required Items

Required Item	Remarks
Spring Opener or Flat-blade Screwdriver	• Spring Opener SERVOPACK accessory (You can also use model 1981045-1 from Tyco Electronics Japan G.K.)
	• Flat-blade screwdriver Commercially available screwdriver with tip width of 3.0 mm to 3.5 mm

1. Remove the main circuit connector and motor connector from the SERVOPACK.

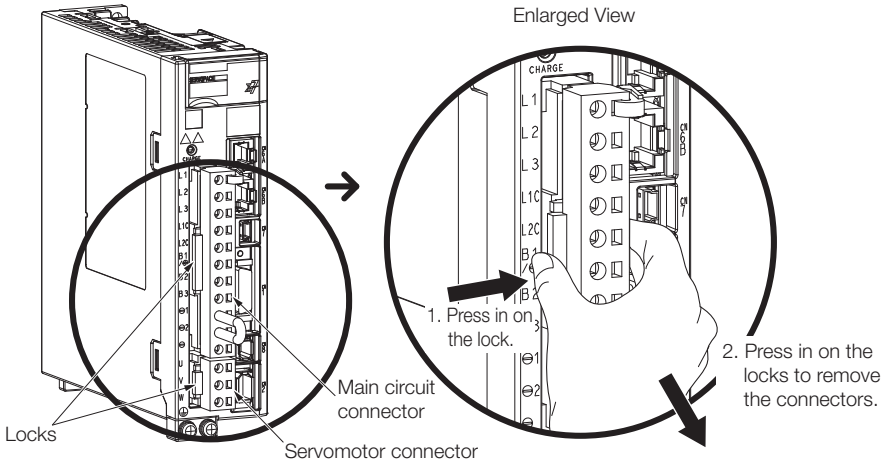

2. Remove the sheath from the wire to connect.

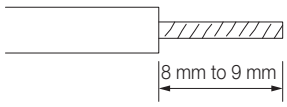

3. Open the wire insertion hole on the terminal connector with the tool. There are the following two ways to open the insertion hole. Use either method.

①Using a Spring Opener	②Using a Flat-blade Screwdriver
Open the insertion hole with the Spring Opener as shown in the figure.	Firmly insert a flat-blade screwdriver into the screwdriver insertion hole to open the wire insertion hole.

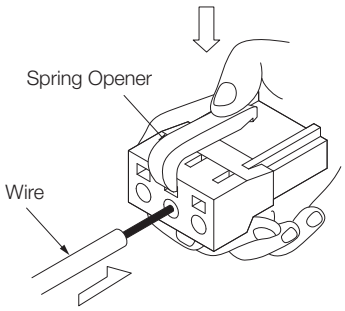

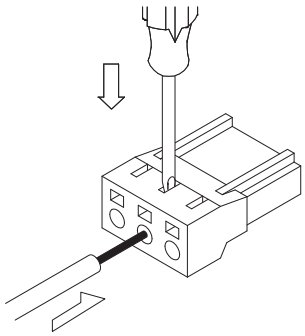

4. Insert the conductor into the wire insertion hole. Then, remove the Spring Opener or flat-blade screwdriver.
5. Make all other connections in the same way.
6. When you have completed wiring, attach the connectors to the SERVOPACK.

4.3.3 Power ON Sequence

Consider the following points when you design the power ON sequence.

- The ALM (Servo Alarm) signal is output for up to five seconds when the control power supply is turned ON. Take this into consideration when you design the power ON sequence, and turn ON the main circuit power supply to the SERVOPACK when the ALM signal is OFF (alarm cleared).

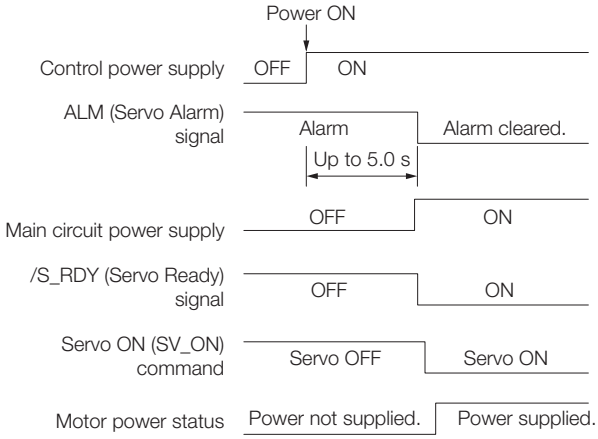

Information If the servo ON state cannot be achieved by inputting the SV_ON command, the /S_RDY signal is not ON. Check the status of the /S_RDY signal. Refer to the following section for details.

☞ *6.1.6 /S-RDY (Servo Ready) Signal* on page 6-10

- If you use a DC power supply input with any of the following SERVOPACKs, use the power ON sequence shown below: SGD7S-330A, -470A, -550A, -590A, or -780A.

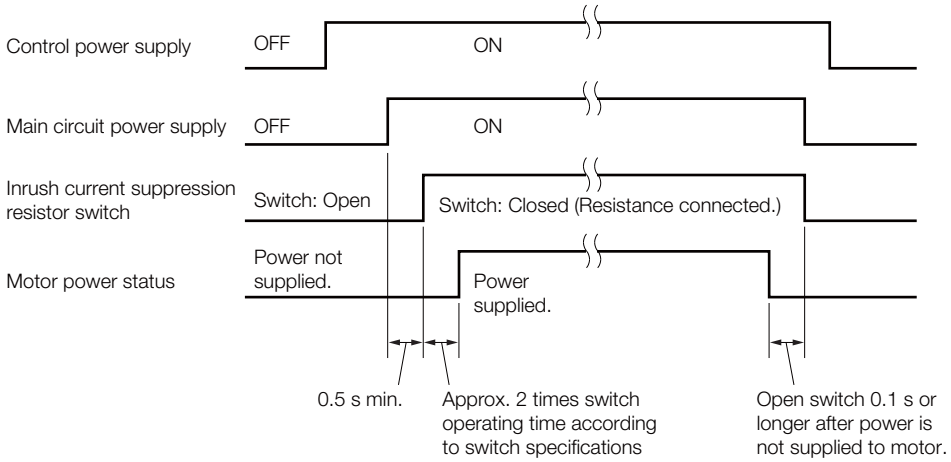

- Design the power ON sequence so that main circuit power supply is turned OFF when an ALM (Servo Alarm) signal is output.
- Make sure that the power supply specifications of all parts are suitable for the input power supply.
- Allow at least 1 s after the power supply is turned OFF before you turn it ON again.

Important

Turn ON the control power supply before the main circuit power supply or turn ON the control power supply and the main circuit power supply at the same time.
Turn OFF the main circuit power supply first, and then turn OFF the control power supply.

⚠ WARNING

- Even after you turn OFF the power supply, a high residual voltage may still remain in the SERVOPACK. To prevent electric shock, do not touch the power supply terminals after you turn OFF the power. When the voltage is discharged, the CHARGE indicator will turn OFF. Make sure the CHARGE indicator is OFF before you start wiring or inspection work.

4.3.4 Power Supply Wiring Diagrams

Using Only One SERVOPACK

- Wiring Example for Three-Phase, 200-VAC Power Supply Input: SGD7S-R70A, -R90A, -1R6A, -2R8A, -3R8A, -5R5A, -7R6A, -120A, -180A, -200A, and -330A

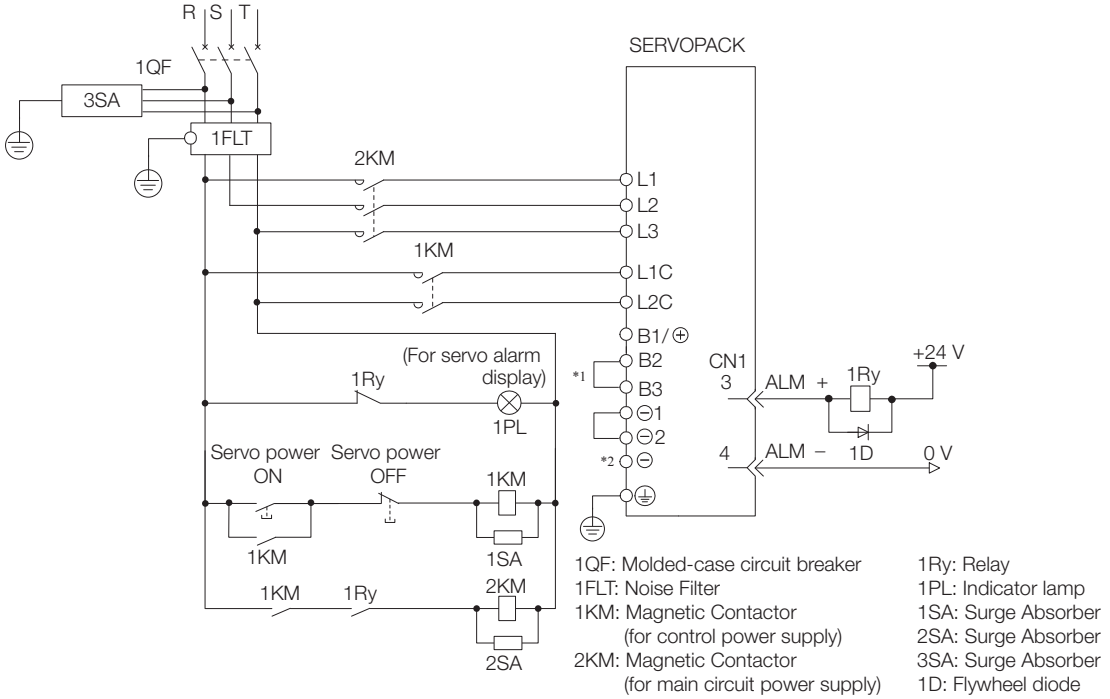

*1. You do not have to connect B2 and B3 for the following models: SGD7S-R70A, SGD7S-R90A, SGD7S-1R6A, and SGD7S-2R8A. Do not connect them.

*2. A SGD7S-330A SERVOPACK does not have a - terminal.

- Wiring Example for Three-Phase, 200-VAC Power Supply Input: SGD7S-470A, -550A, -590A, and -780A

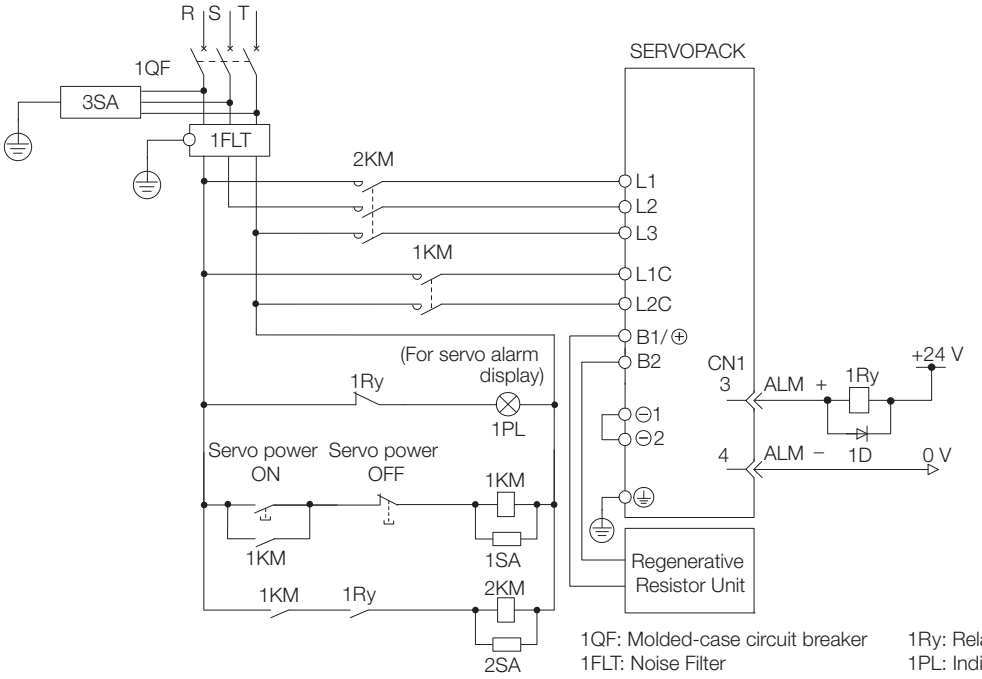

1QF: Molded-case circuit breaker
1FLT: Noise Filter
1KM: Magnetic Contactor (for control power supply)
2KM: Magnetic Contactor (for main circuit power supply)
1Ry: Relay
1PL: Indicator lamp
1SA: Surge Absorber
2SA: Surge Absorber
3SA: Surge Absorber
1D: Flywheel diode

- Wiring Example for Single-Phase, 200-VAC Power Supply Input

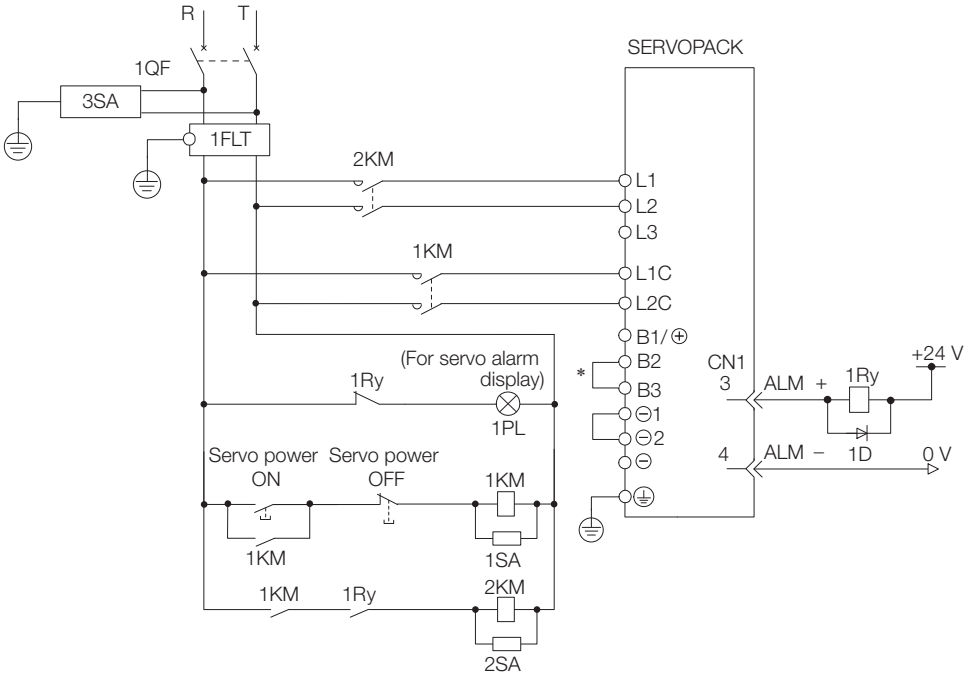

1QF: Molded-case circuit breaker
1FLT: Noise Filter
1KM: Magnetic Contactor (for control power supply)
2KM: Magnetic Contactor (for main circuit power supply)
1Ry: Relay
1PL: Indicator lamp
1SA: Surge Absorber
2SA: Surge Absorber
3SA: Surge Absorber
1D: Flywheel diode

* You do not have to connect B2 and B3 for the following models: SGD7S-R70A, SGD7S-R90A, SGD7S-1R6A, and SGD7S-2R8A. Do not connect them.

- Wiring Example for DC Power Supply Input: SGD7S-R70A, -R90A, -1R6A, -2R8A, -3R8A, -5R5A, -7R6A, -120A, -180A, and -200A

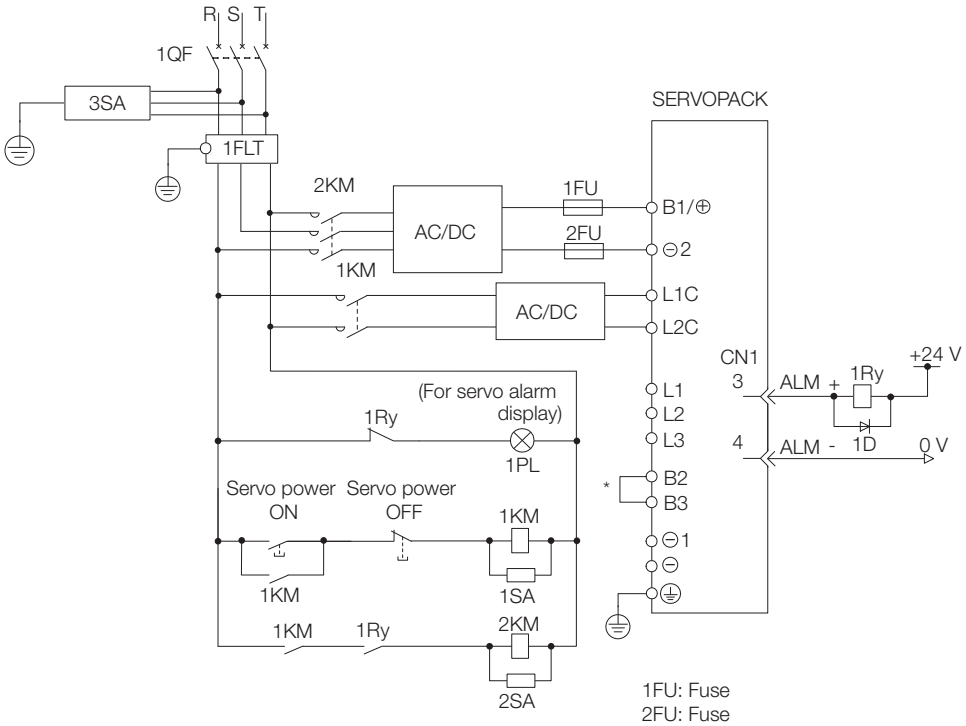

1QF: Molded-case circuit breaker
1FLT: Noise Filter
1KM: Magnetic Contactor (for control power supply)
2KM: Magnetic Contactor (for main circuit power supply)

1FU: Fuse
2FU: Fuse
1Ry: Relay
1PL: Indicator lamp
1SA: Surge Absorber
2SA: Surge Absorber
3SA: Surge Absorber
1D: Flywheel diode

* You do not have to connect B2 and B3 for the following models: SGD7S-R70A, SGD7S-R90A, SGD7S-1R6A, and SGD7S-2R8A. Do not connect them.

- Wiring Example for DC Power Supply Input: SGD7S-330A, -470A, -550A, -590A, and -780A

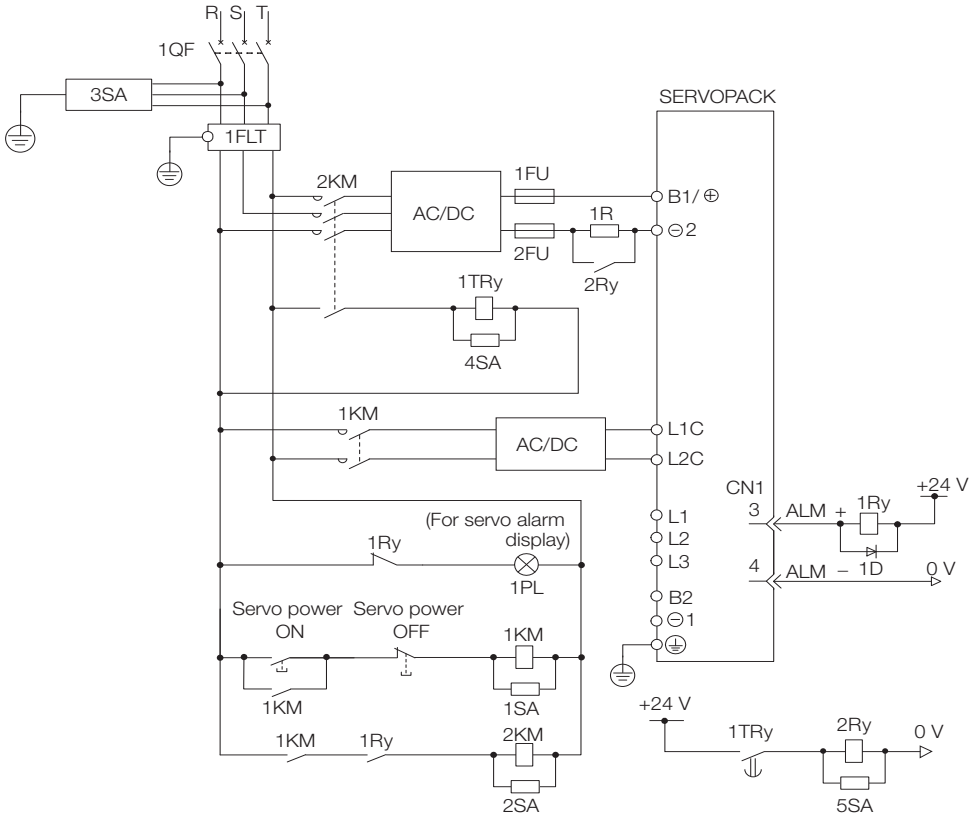

1QF: Molded-case circuit breaker
1FLT: Noise Filter
1KM: Magnetic Contactor (for control power supply)
2KM: Magnetic Contactor (for main circuit power supply, auxiliary contact)
1FU: Fuse, positive side
2FU: Fuse, negative side
1Ry: Relay
2Ry: Relay (for inrush current suppression resistor switch)
1TRy: Timer relay
1PL: Indicator lamp

1SA: Surge Absorber
2SA: Surge Absorber
3SA: Surge Absorber
4SA: Surge Absorber
5SA: Surge Absorber
1D: Flywheel diode
1R: External inrush current suppression resistor

- Wiring Example for Single-Phase, 100-VAC Power Supply Input: SGD7S-R70F, -R90F, -2R1F, or -2R8F

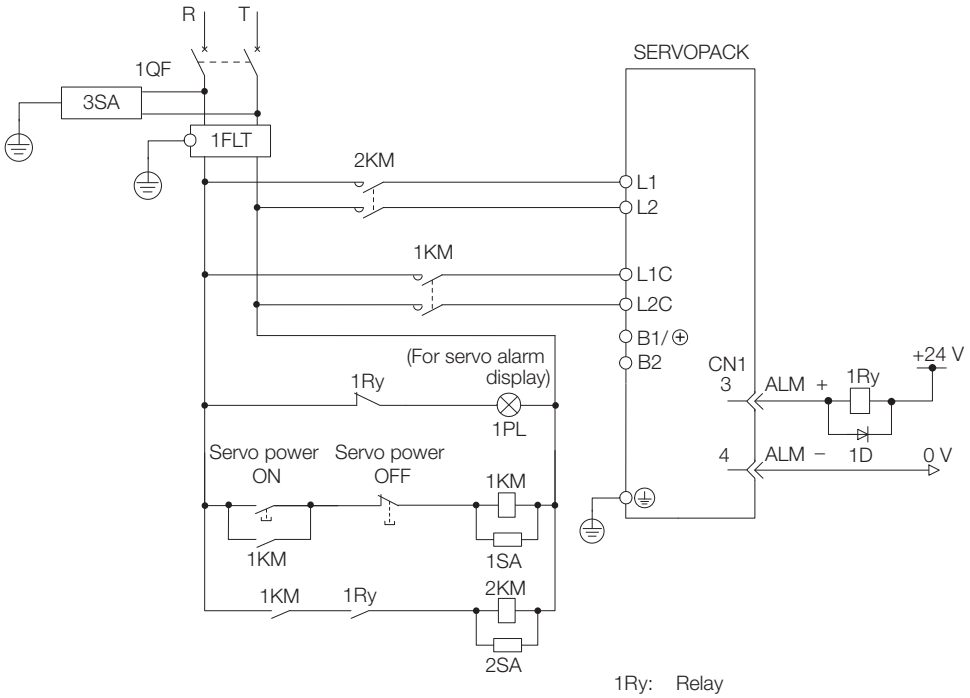

1QF: Molded-case circuit breaker
1FLT: Noise Filter
1KM: Magnetic Contactor (for control power supply)
2KM: Magnetic Contactor (for main circuit power supply)

1Ry: Relay
1PL: Indicator lamp
1SA: Surge Absorber
2SA: Surge Absorber
3SA: Surge Absorber
1D: Flywheel diode

Using More Than One SERVOPACK

Connect the ALM (Servo Alarm) output for these SERVOPACKs in series to operate the alarm detection relay (1RY).

When a SERVOPACK alarm is activated, the ALM output signal transistor turns OFF.

The following diagram shows the wiring to stop all of the Servomotors when there is an alarm for any one SERVOPACK.

More than one SERVOPACK can share a single Noise Filter. However, always select a Noise Filter that has a large enough capacity to handle the total power supply capacity of all the SERVOPACKs. Be sure to consider the load conditions.

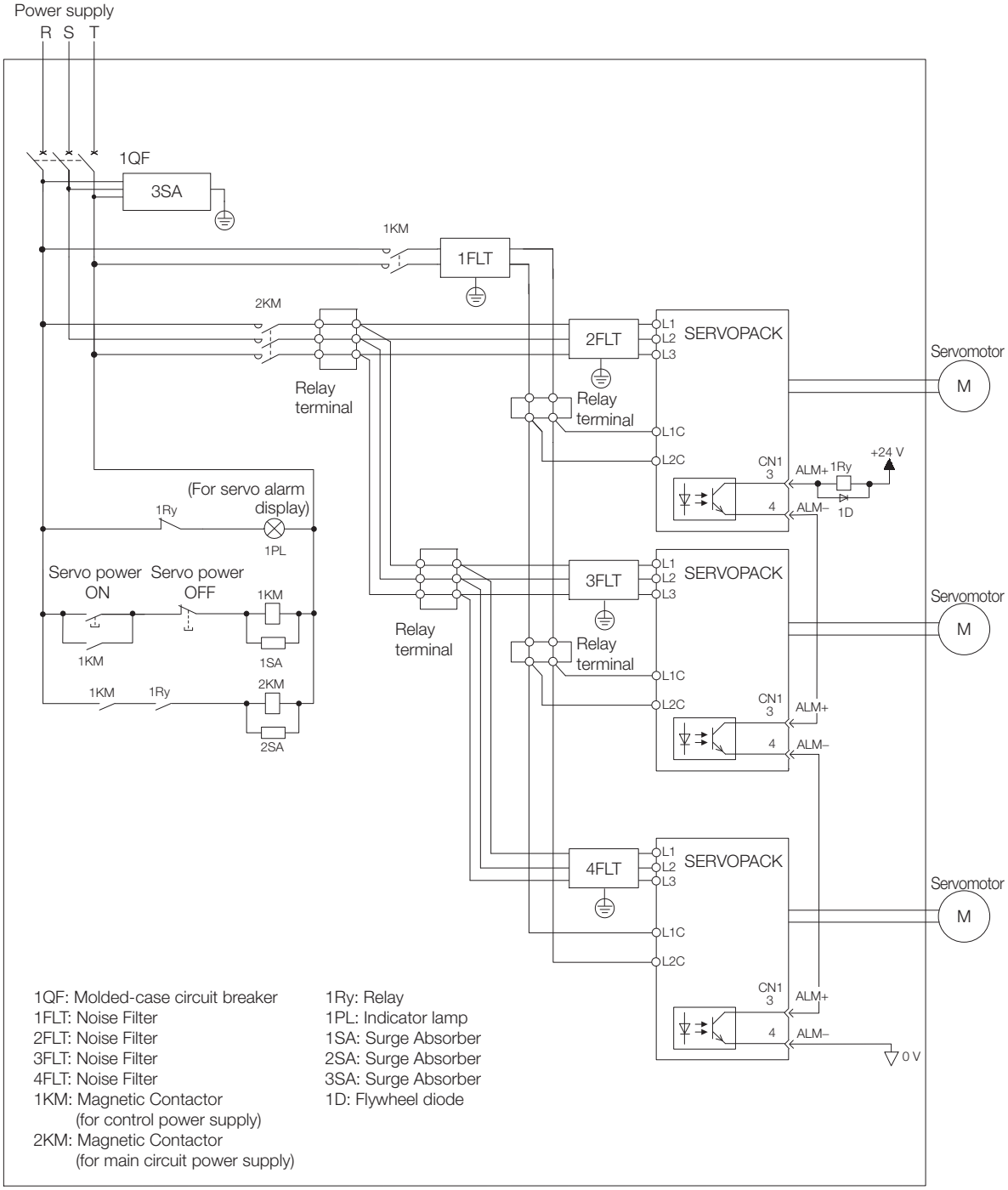

4.3.5 Wiring Regenerative Resistors

This section describes how to connect External Regenerative Resistors.

Refer to the following manual to select the capacity of a Regenerative Resistor.

Σ-7-Series Peripheral Device Selection Manual (Manual No.: SIEP S800001 32)

⚠ WARNING

- Be sure to wire Regenerative Resistors correctly. Do not connect B1/⊕ and B2.
  Doing so may result in fire or damage to the Regenerative Resistor or SERVOPACK.

Connecting Regenerative Resistors

◆ SERVOPACK Models SGD7S-R70A, -R90A, -1R6A, -2R8A, -R70F, -R90F, -2R1F, and -2R8F

1. Connect the External Regenerative Resistor between the B1/⊕ and B2 terminals on the SERVOPACK.

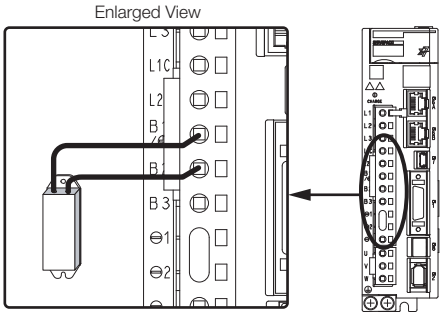

2. Set Pn600 (Regenerative Resistor Capacity) and Pn603 (Regenerative Resistor Resistance).
   Refer to the following section for details on the settings.
   5.18 Setting the Regenerative Resistor Capacity on page 5-56

◆ SERVOPACK Models SGD7S-3R8A, -5R5A, -7R6A, -120A, -180A, -200A, and -330A

1. Remove the lead from between the B2 and B3 terminals on the SERVOPACK.

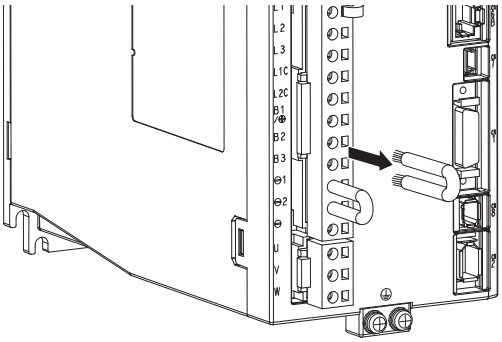

2. Connect the External Regenerative Resistor between the B1/⊕ and B2 terminals.

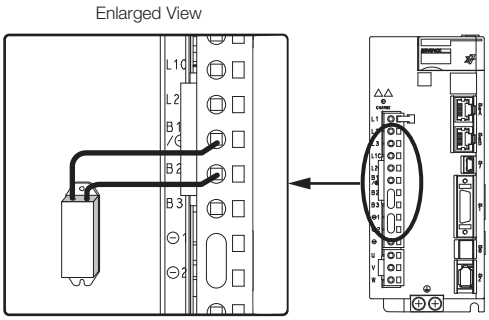

3. Set Pn600 (Regenerative Resistor Capacity) and Pn603 (Regenerative Resistor Resistance).
   Refer to the following section for details on the settings.
   ☞ *5.18 Setting the Regenerative Resistor Capacity* on page 5-56

◆ SERVOPACK Models SGD7S-470A, -550A, -590A, and -780A

1. Connect the R1 and R2 terminals on the Regenerative Resistor Unit to the B1/⊕ and B2 terminals on the SERVOPACK.

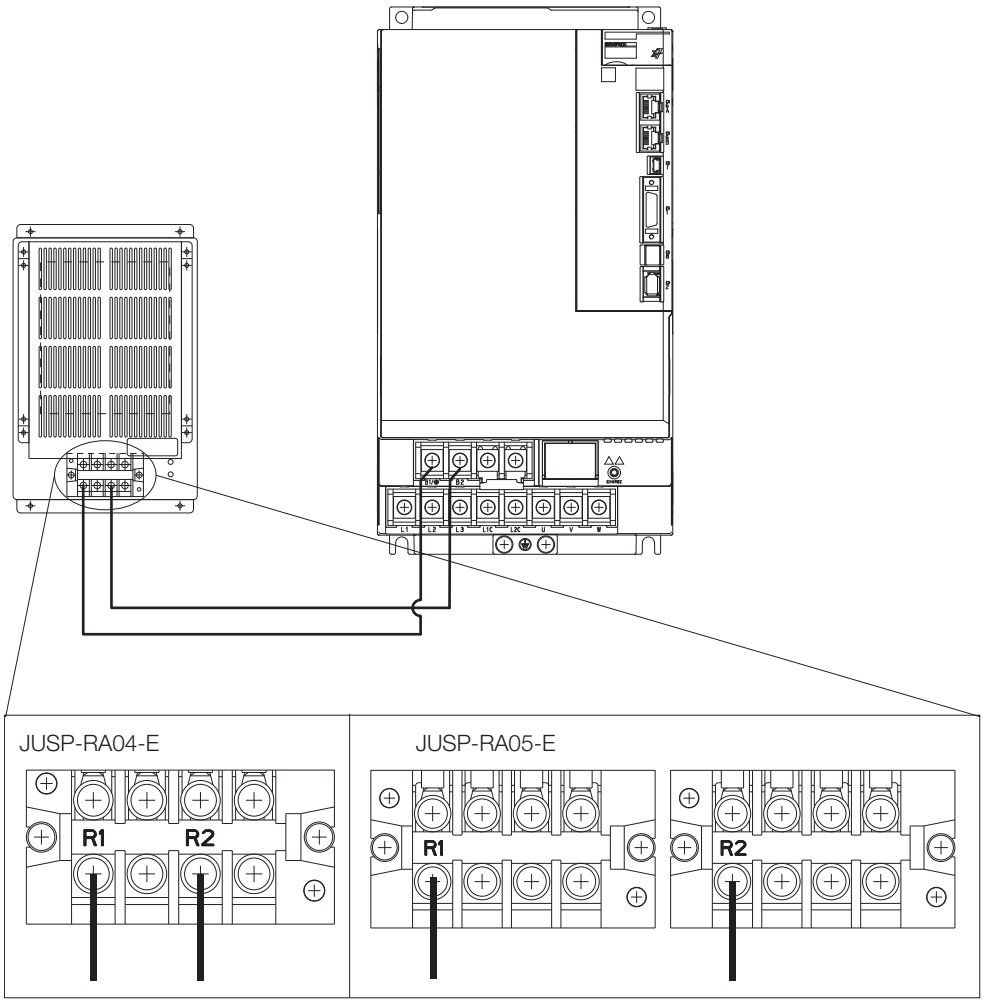

2. Set Pn600 (Regenerative Resistor Capacity) and Pn603 (Regenerative Resistor Resistance) as required.
   - When using the Yaskawa-recommended Regenerative Resistor Unit, use the default settings for Pn600 and Pn603.
   - If you use any other external regenerative resistor, set Pn600 and Pn603 according to the specifications of the regenerative resistor.

   Refer to the following section for details on the settings.
   ☞ *5.18 Setting the Regenerative Resistor Capacity* on page 5-56

4.3.6 Wiring Reactors for Harmonic Suppression

You can connect a reactor for harmonic suppression to the SERVOPACK when power supply harmonic suppression is required. Refer to the following manual for details on reactors for harmonic suppression.

Σ-7-Series Peripheral Device Selection Manual (Manual No.: SIEP S800001 32)

Refer to the following figures to connect reactors.

SERVOPACK with Three-Phase, 200-VAC Power Supply Input	SERVOPACK with Single-Phase, 100-VAC Power Supply Input
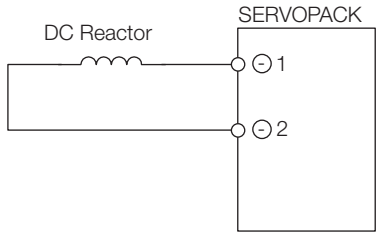	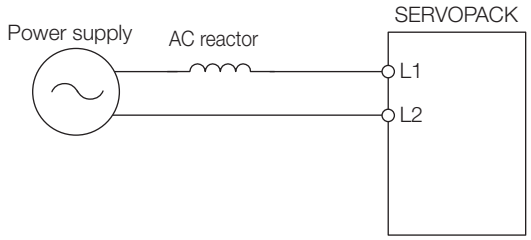

Note: 1. Connection terminals ⊖ 1 and ⊖ 2 for a DC Reactor are connected when the SERVOPACK is shipped. Remove the lead wire and connect a DC Reactor.
2. Reactors are optional products. (Purchase them separately.)
3. You cannot connect a DC Reactor to a SERVOPACK with a single-phase, 100-VAC power supply input.

4.4 Wiring Servomotors

4.4.1 Terminal Symbols and Terminal Names

The SERVOPACK terminals or connectors that are required to connect the SERVOPACK to a Servomotor are given below.

Terminal/Connector Symbols	Terminal/Connector Name	Remarks
U, V, and W	Servomotor terminals	Refer to the following section for the wiring procedure. ☞ *4.3.2 Wiring Procedure for Main Circuit Connector* on page 4-13
⏚	Ground terminal	–
CN2	Encoder connector	–

4.4.2 Pin Arrangement of Encoder Connector (CN2)

- When Using a Rotary Servomotor

Pin No.	Signal	Function
1	PG5V	Encoder power supply +5 V
2	PG0V	Encoder power supply 0 V
3	BAT (+)*	Battery for absolute encoder (+)
4	BAT (-)*	Battery for absolute encoder (-)
5	PS	Serial data (+)
6	/PS	Serial data (-)
Shell	Shield	–

* No wiring is required for an incremental encoder or a batteryless absolute encoder.

- When Using a Direct Drive Servomotor

Pin No.	Signal	Function
1	PG5V	Encoder power supply +5 V
2	PG0V	Encoder power supply 0 V
3	–	– (Do not use.)
4	–	– (Do not use.)
5	PS	Serial data (+)
6	/PS	Serial data (-)
Shell	Shield	–

- When Using a Linear Servomotor

Pin No.	Signal	Function
1	PG5V	Linear encoder power supply +5 V
2	PG0V	Linear encoder power supply 0 V
3	–	– (Do not use.)
4	–	– (Do not use.)
5	PS	Serial data (+)
6	/PS	Serial data (-)
Shell	Shield	–

4.4.3 Wiring the SERVOPACK to the Encoder

When Using an Absolute Encoder

If you use an absolute encoder, use an Encoder Cable with a JUSP-BA01-E Battery Case or install a battery on the host controller.

Refer to the following section for the battery replacement procedure.

☞ *12.1.3 Replacing the Battery* on page 12-3

- Wiring Example When Using an Encoder Cable with a Battery Case

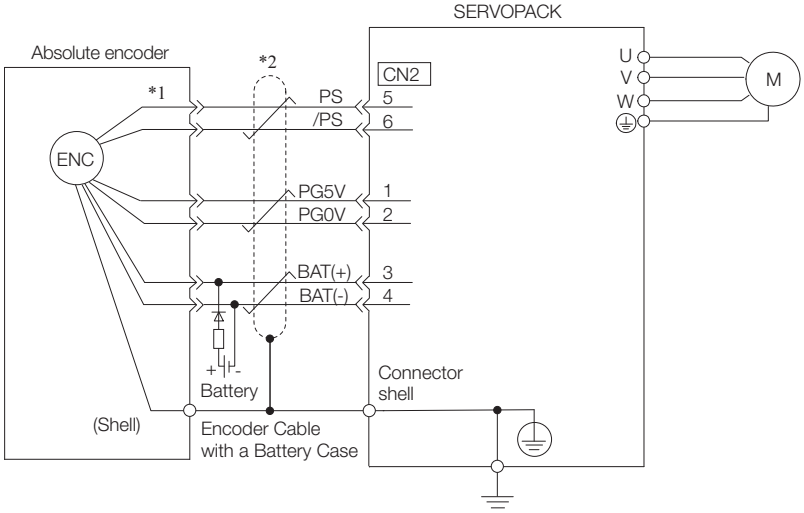

*1. The absolute encoder pin numbers for wiring the connector depend on the Servomotor that you use.

*2. 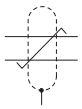 represents a shielded twisted-pair cable.

- Wiring Example When Installing a Battery on the Host Controller

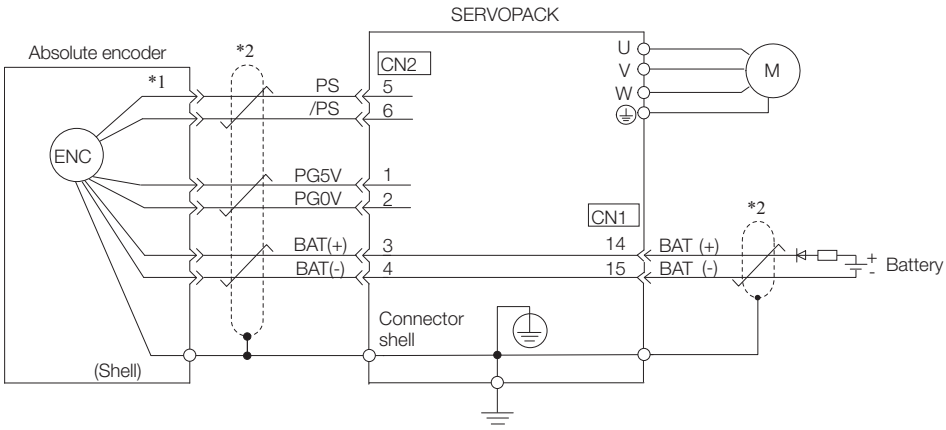

*1. The absolute encoder pin numbers for wiring the connector depend on the Servomotor that you use.

*2. 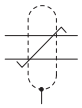 represents a shielded twisted-pair cable.

Important

- When Installing a Battery on the Encoder Cable
  Use the Encoder Cable with a Battery Case that is specified by Yaskawa.
  Refer to the following manual for details.
  Σ-7-Series Peripheral Device Selection Manual (Manual No.: SIEP S800001 32)
- When Installing a Battery on the Host Controller
  Insert a diode near the battery to prevent reverse current flow.

Circuit Example	Required Component Specifications	
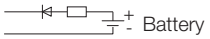	• Schottky Diode Reverse Voltage: Vr ≥ 40 V Forward Voltage: Vf ≤ 0.37 V Reverse current: Ir ≤ 5 μA Junction temperature: Tj ≥ 125°C	• Resistor Resistance: 22 Ω Tolerance: ±5% max. Rated power: 0.25 W min.

When Using an Incremental Encoder or Batteryless Absolute Encoder

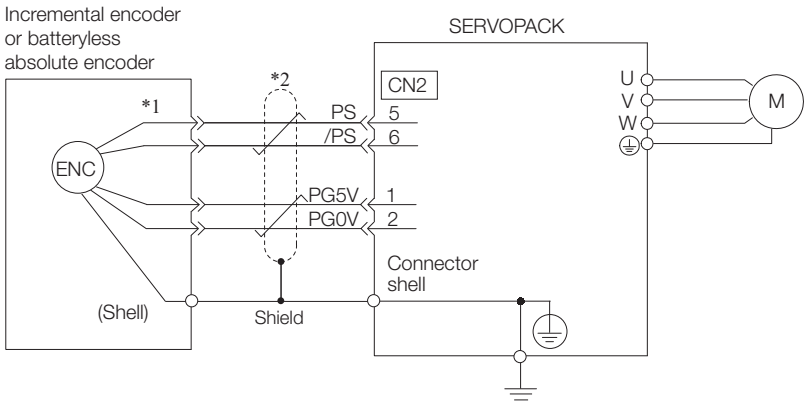

*1. The encoder pin numbers for wiring the connector depend on the Servomotor that you use.

*2. 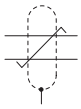 represents a shielded twisted-pair cable.

When Using an Absolute Linear Encoder

The wiring depends on the manufacturer of the linear encoder.

◆ Connections to Linear Encoder from Dr. JOHANNES HEIDENHAIN GmbH

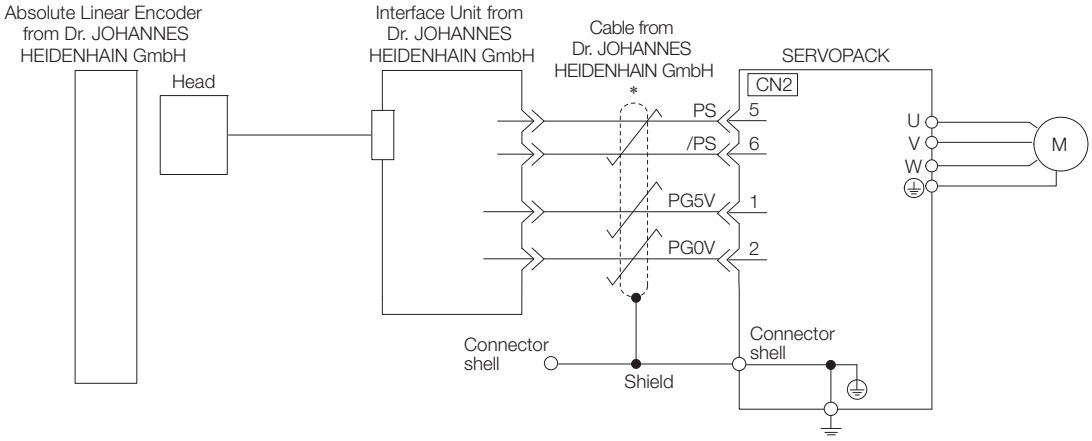

* represents a shielded twisted-pair cable.

◆ Connections to Absolute Linear Encoder from Mitutoyo Corporation

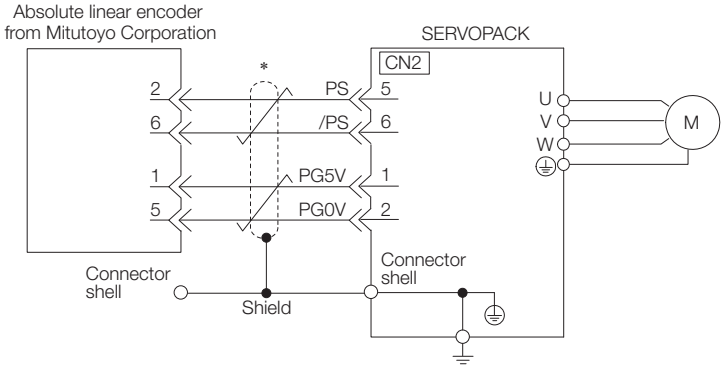

* represents a shielded twisted-pair cable.

◆ Connections to Absolute Linear Encoder from Renishaw PLC

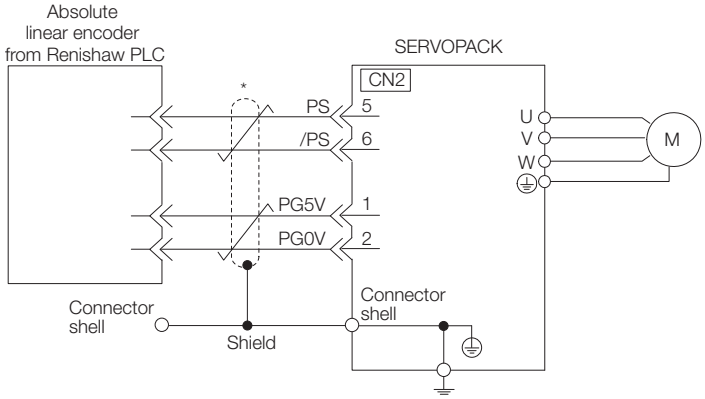

* represents a shielded twisted-pair cable.

◆ Connections to Absolute Linear Encoder from Magnescale Co., Ltd.

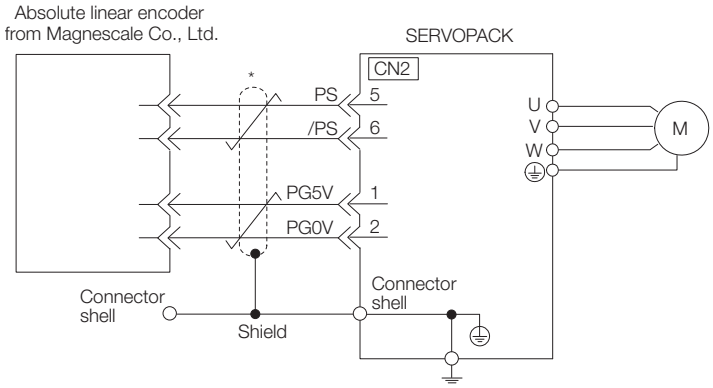

* represents a shielded twisted-pair cable.

◆ Connections to Absolute Linear Encoder from Fagor Automation S. Coop.

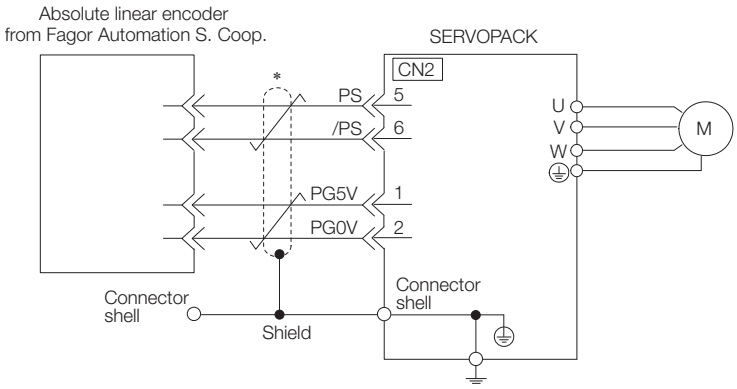

* represents a shielded twisted-pair cable.

When Using an Incremental Linear Encoder

The wiring depends on the manufacturer of the linear encoder.

◆ Connections to Linear Encoder from Dr. JOHANNES HEIDENHAIN GmbH

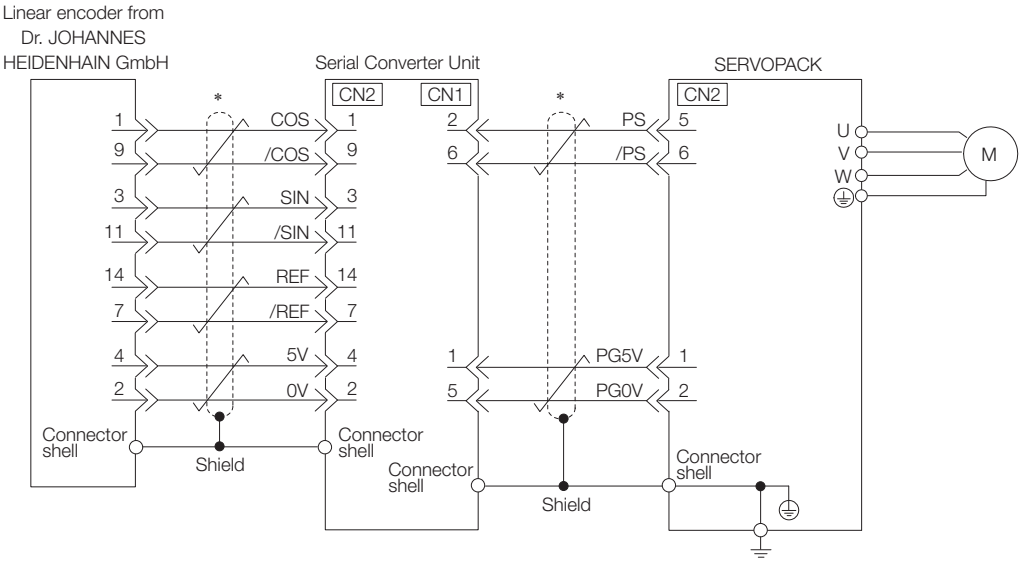

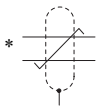
represents a shielded twisted-pair cable.

◆ Connections to Linear Encoder from Renishaw PLC

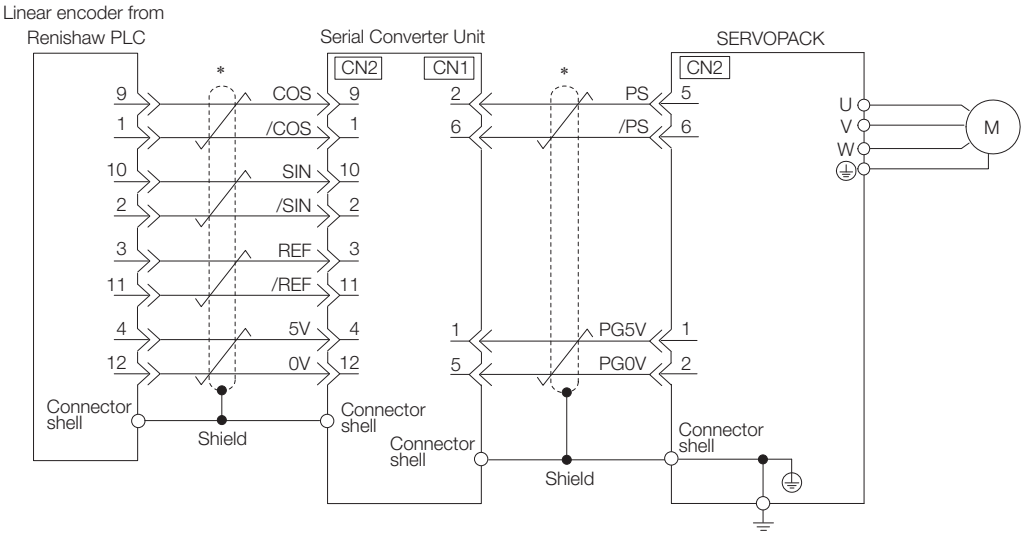

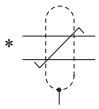
represents a shielded twisted-pair cable.

◆ Connections to Linear Encoder from Magnescale Co., Ltd.

If you use a linear encoder from Magnescale Co., Ltd., the wiring will depend on the model of the linear encoder.

■ SR75 and SR85

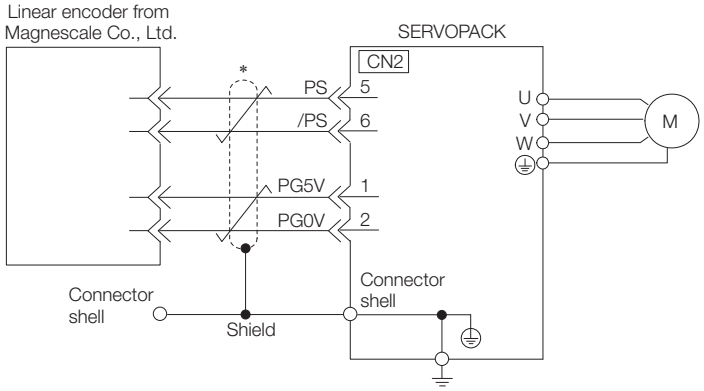

* represents a shielded twisted-pair cable.

■ SL700, SL710, SL720, SL730, and SQ10

• PL101-RY, MQ10-FLA, or MQ10-GLA Interpolator

The following table gives the Linear Encoder and Interpolator combinations.

Linear Encoder Model	Interpolator
SL700, SL710, SL720, or SL730	PL101-RY*1
SQ10	MQ10-FLA*2
	MQ10-GLA*2

*1. This is the model of the Head with Interpolator.
*2. This is the model of the Interpolator.

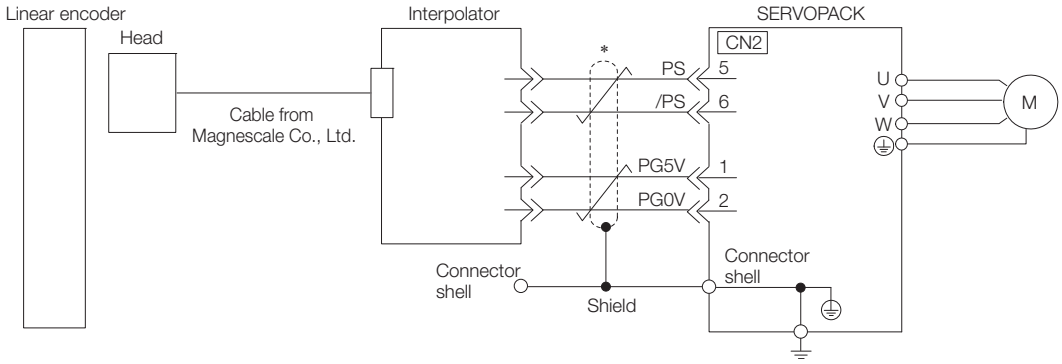

* represents a shielded twisted-pair cable.

■ SL700, SL710, SL720, and SL730

• MJ620-T13 Interpolator

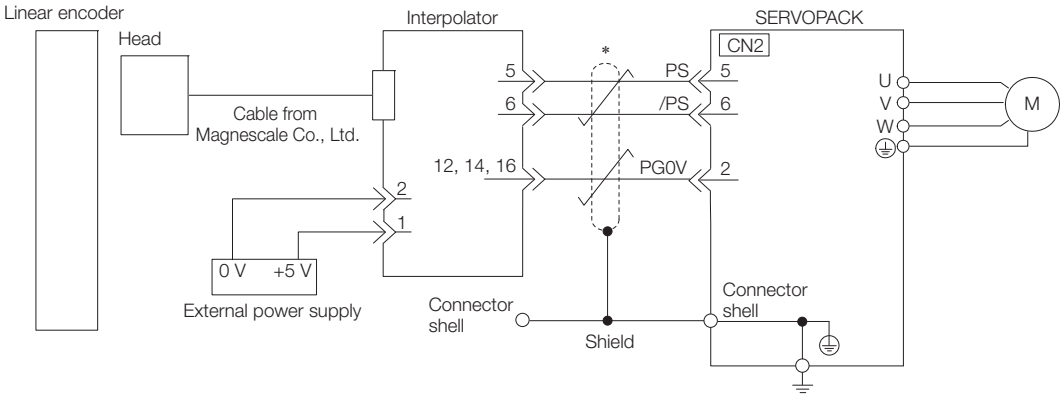

* represents a shielded twisted-pair cable.

4.4.4 Wiring the SERVOPACK to the Holding Brake

Important

- If you use a Rotary Servomotor, select a Surge Absorber according to the brake current and brake power supply. Refer to the following manual for details.
  Σ-7-Series Peripheral Device Selection Manual (Manual No.: SIEP S800001 32)
- After the Surge Absorber is connected, check the brake operation delay time in your application. The Surge Absorber may affect the brake operation delay time.
  Configure the relay circuit to activate the holding brake for an emergency stop.

Relay Circuit Example

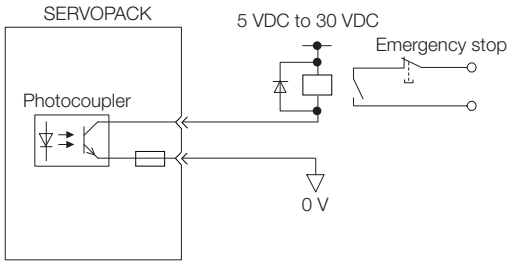

- You can change the output signal allocation of the /BK signal. Refer to the following section for details.
  Allocating the /BK (Brake) Signal on page 5-36
- If you use a 24-V brake, install a separate power supply for the 24-VDC power supply from other power supplies, such as the one for the I/O signals of the CN1 connector. If the power supply is shared, the I/O signals may malfunction.

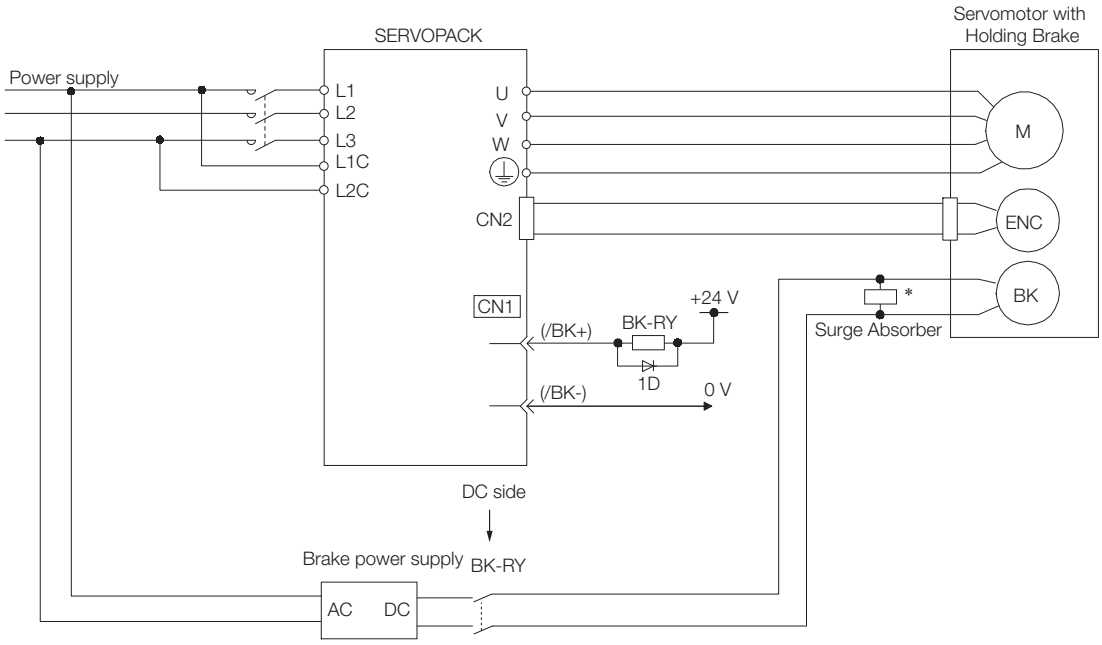

BK-RY: Brake control relay
1D: Flywheel diode

* Install the surge absorber near the brake terminals on the Servomotor.

4.5 I/O Signal Connections

4.5.1 I/O Signal Connector (CN1) Names and Functions

The following table gives the pin numbers, names, and functions the I/O signal pins for the default settings.

Input Signals

Default settings are given in parentheses.

Signal	Pin No.	Name	Function	Reference
/SI1* (P-OT)	7	General-purpose Sequence Input 1 (Forward Drive Prohibit Input)	You can allocate the input signal to use with a parameter. (Stops Servomotor drive (to prevent overtravel) when the moving part of the machine exceeds the range of movement.)	page 5-29
/SI2* (N-OT)	8	General-purpose Sequence Input 2 (Reverse Drive Prohibit Input)		
/SI3* (/DEC)	9	General-purpose Sequence Input 3 (Origin Return Deceleration Switch Input)	You can allocate the input signal to use with a parameter. (Connects the deceleration limit switch for origin return.)	–
/SI4* (/EXT1)	10	General-purpose Sequence Input 4 (External Latch Input 1)	You can allocate the input signals to use with parameters. (Connect the external signals that latch the current feedback pulse counter.)	–
/SI5* (/EXT2)	11	General-purpose Sequence Input 5 (External Latch Input 2)		
/SI6* (/EXT3)	12	General-purpose Sequence Input 6 (External Latch Input 3)		
/SI0*	13	General-purpose Sequence Input 0	You can allocate the input signal to use with a parameter. (Used for general-purpose input. You can monitor this signal in the I/O monitor field of MECHATROLINK.)	–
+24VIN	6	Sequence Input Signal Power Supply Input	Inputs the sequence input signal power supply. Allowable voltage range: 24 VDC ±20% The 24-VDC power supply is not provided by Yaskawa.	–
BAT+	14	Battery for Absolute Encoder (+)	These are the pins to connect the absolute encoder backup battery. Do not connect these pins if you use the Encoder Cable with a Battery Case.	–
BAT-	15	Battery for Absolute Encoder (-)		
TH	5	Overheat Protection Input	Inputs the overheat protection signal from a Linear Servomotor or from a sensor attached to the machine.	page 6-62

* You can change the allocations. Refer to the following section for details.
☞ *6.1.1 Input Signal Allocations* on page 6-4

Note: If forward drive prohibition or reverse drive prohibition is used, the SERVOPACK is stopped by software controls. If the application does not satisfy the safety requirements, add external safety circuits as required.

Output Signals

Default settings are given in parentheses.

Signal	Pin No.	Name	Function	Reference
ALM+	3	Servo Alarm Output	Turns OFF (opens) when an error is detected.	page 6-8
ALM-	4			
/SO1+* (/BK+)	1	General-purpose Sequence Output 1 (Brake Output)	You can allocate the output signal to use with a parameter. (Controls the brake. The brake is released when the signal turns ON (closes).)	page 5-34
/SO1-* (/BK-)	2			
/SO2+*	23	General-purpose Sequence Output 2	Used for general-purpose outputs. Set the parameters to allocate functions.	–
/SO2-*	24			
/SO3+*	25	General-purpose Sequence Output 3		
/SO3-*	26			
PAO	17	Encoder Divided Pulse Output, Phase A	Output the encoder divided pulse output signals with a 90° phase differential.	page 6-33 page 6-43
/PAO	18			
PBO	19	Encoder Divided Pulse Output, Phase B		
/PBO	20			
PCO	21	Encoder Divided Pulse Output, Phase C	Outputs the origin signal once every encoder rotation.	
/PCO	22			
SG	16	Signal ground	This is the 0-V signal for the control circuits.	–
FG	Shell	Frame ground	Connected to the frame ground if the shield of the I/O Signal Cable is connected to the connector shell.	–

* You can change the allocations. Refer to the following section for details.
☞ *6.1.2 Output Signal Allocations* on page 6-5

4.5.2 I/O Signal Connector (CN1) Pin Arrangement

The following figure gives the pin arrangement of the of the I/O signal connector (CN1) for the default settings.

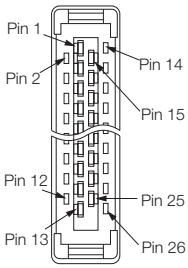

The above view is from the direction of the following arrow without the connector shell attached.

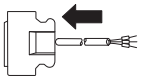

2	/SO1- (/BK-)	General-purpose Sequence Output 1	1	/SO1+ (/BK+)	General-purpose Sequence Output 1	15	BAT-	Battery for Absolute Encoder (-)	14	BAT+	Battery for Absolute Encoder (+)
4	ALM-	Servo Alarm Output	3	ALM+	Servo Alarm Output	17	PAO	Encoder Divided Pulse Output, Phase A	16	SG	Signal Ground
6	+24VIN	Sequence Input Signal Power Supply Input	5	TH	Overheat Protection Input	19	PBO	Encoder Divided Pulse Output, Phase B	18	/PAO	Encoder Divided Pulse Output, Phase A
8	/SI2 (N-OT)	General-purpose Sequence Input 2	7	/SI1 (P-OT)	General-purpose Sequence Input 1	21	PCO	Encoder Divided Pulse Output, Phase C	20	/PBO	Encoder Divided Pulse Output, Phase B
10	/SI4 (/EXT1)	General-purpose Sequence Input 4	9	/SI3 (/DEC)	General-purpose Sequence Input 3	23	/SO2+	General-purpose Sequence Output 2	22	/PCO	Encoder Divided Pulse Output, Phase C
12	/SI6 (/EXT3)	General-purpose Sequence Input 6	11	/SI5 (/EXT2)	General-purpose Sequence Input 5	25	/SO3+	General-purpose Sequence Output 3	24	/SO2-	General-purpose Sequence Output 2
			13	/SI0	General-purpose Sequence Input 0				26	/SO3-	General-purpose Sequence Output 3

4.5.3 I/O Signal Wiring Examples

Using a Rotary Servomotor

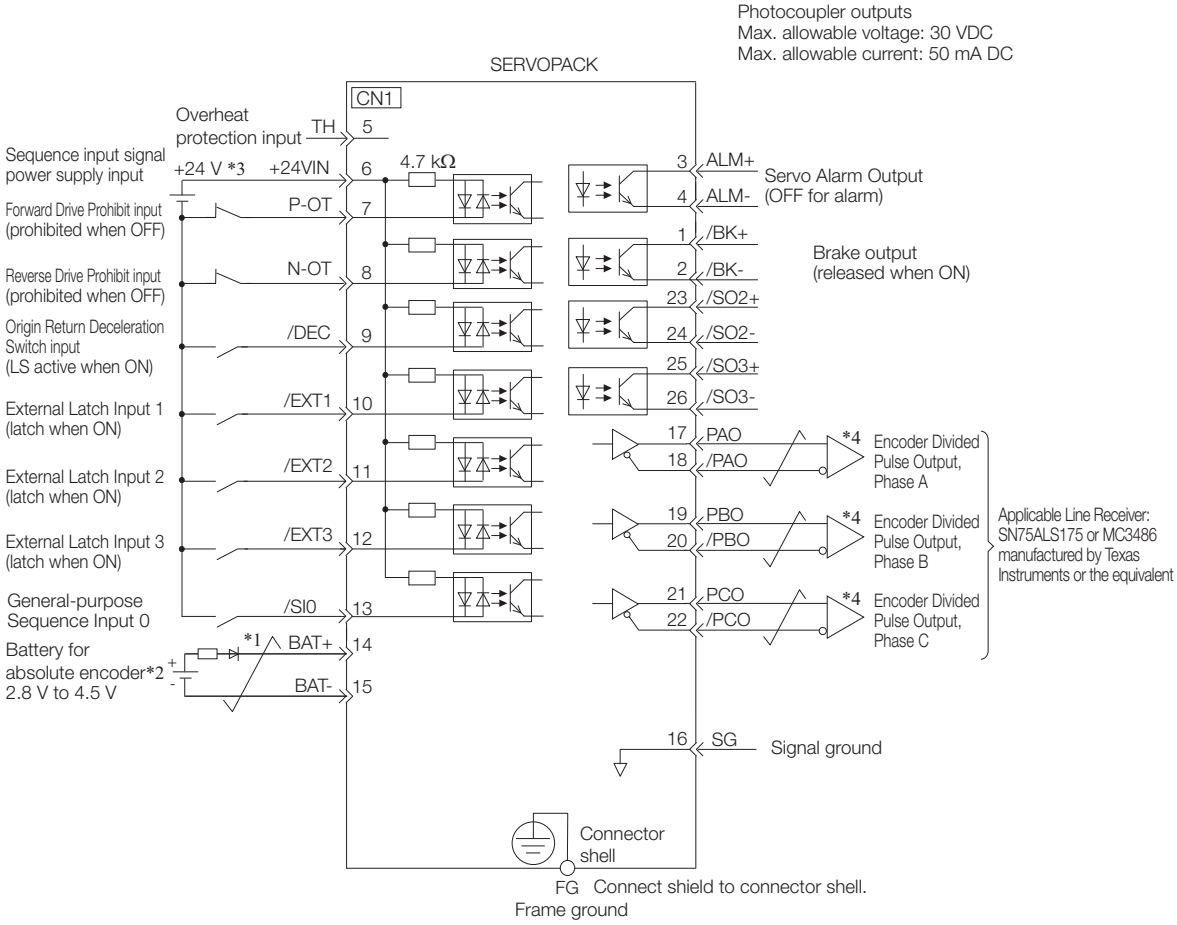

*1. represents twisted-pair wires.

*2. Connect these when using an absolute encoder. If the Encoder Cable with a Battery Case is connected, do not connect a backup battery.

*3. The 24-VDC power supply is not provided by Yaskawa. Use a 24-VDC power supply with double insulation or reinforced insulation.

*4. Always use line receivers to receive the output signals.

Note: 1. You can use parameters to change the functions allocated to the /DEC, P-OT, N-OT, /EXT1, /EXT2, and /EXT3 input signals and the /SO1, /SO2, and /SO3 output signals. Refer to the following section for details.
☞ *6.1 I/O Signal Allocations* on page 6-4

2. If you use a 24-V brake, install a separate power supply for the 24-VDC power supply from other power supplies, such as the one for the I/O signals of the CN1 connector.
If the power supply is shared, the I/O signals may malfunction.

Using a Linear Servomotor

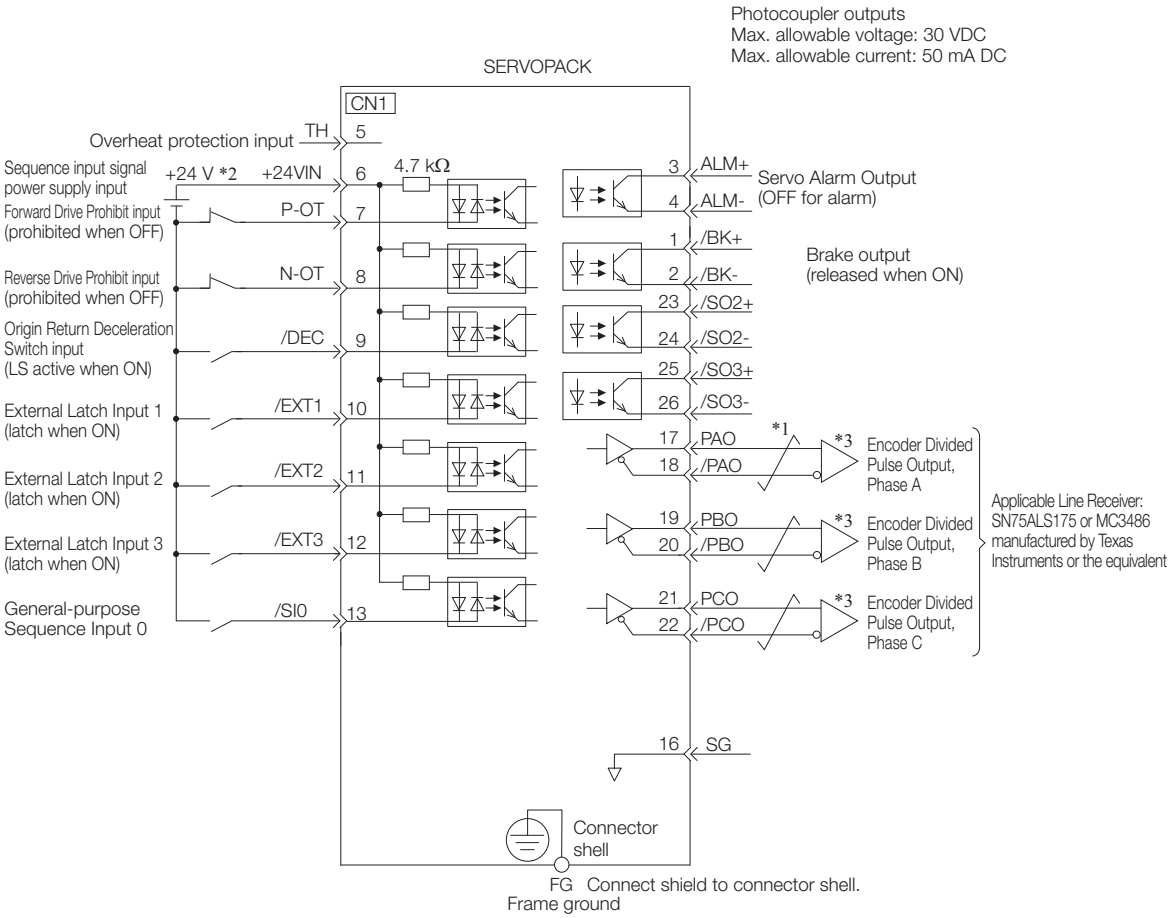

*1. represents twisted-pair wires.

*2. The 24-VDC power supply is not provided by Yaskawa. Use a 24-VDC power supply with double insulation or reinforced insulation.

*3. Always use line receivers to receive the output signals.

Note: 1. You can use parameters to change the functions allocated to the /DEC, P-OT, N-OT, /EXT1, /EXT2, and /EXT3 input signals and the /SO1, /SO2, and /SO3 output signals. Refer to the following section for details.
☞ *6.1 I/O Signal Allocations* on page 6-4

2. If you use a 24-V brake, install a separate power supply for the 24-VDC power supply from other power supplies, such as the one for the I/O signals of the CN1 connector.
If the power supply is shared, the I/O signals may malfunction.

4.5.4 I/O Circuits

Sequence Input Circuits

◆ Photocoupler Input Circuits

This section describes CN1 connector terminals 6 to 13.

Examples for Relay Circuits	Examples for Open-Collector Circuits
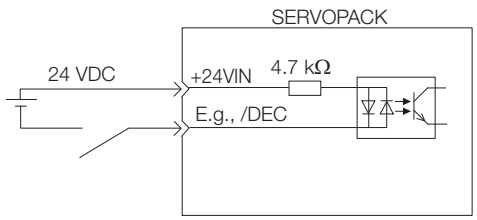	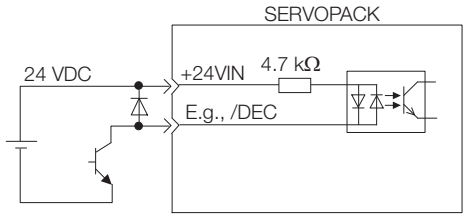

Note: The 24-VDC external power supply capacity must be 50 mA minimum.

The SERVOPACK input circuits use bidirectional photocouplers. Select either a sink circuit or source circuit according to the specifications required by the machine.

Note: The connection examples in *4.5.3 I/O Signal Wiring Examples* on page 4-37 are for sink circuit connections.

Sink Circuits	Source Circuits
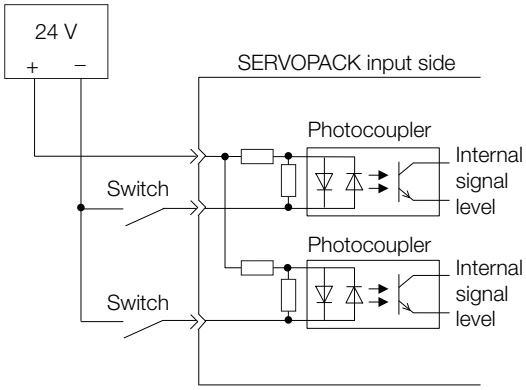	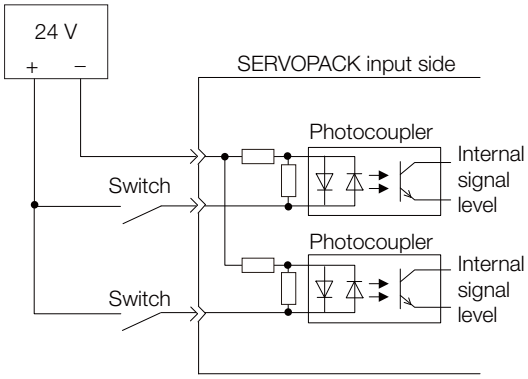

Input Signal Polarity		Input Signal Polarity	
Photocoupler	Internal Signal Level	Photocoupler	Internal Signal Level
ON	Low level	ON	Low level
OFF	High level	OFF	High level

Sequence Output Circuits

> **Important**
> Incorrect wiring or incorrect voltage application to the output circuits may cause short-circuit failures.
> If a short-circuit failure occurs as a result of any of these causes, the holding brake will not work. This could damage the machine or cause an accident that may result in death or injury.

◆ Photocoupler Output Circuits

Photocoupler output circuits are used for the ALM (Servo Alarm), /S-RDY (Servo Ready), and other sequence output signals. Connect a photocoupler output circuit to a relay or line-receiver circuit.

Example for Relay Circuit	Example for Line-Receiver Circuit
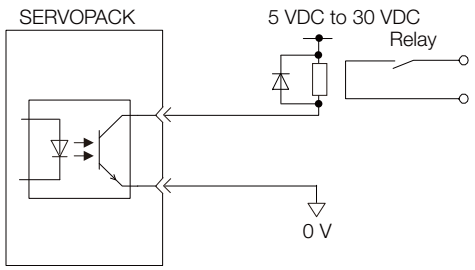	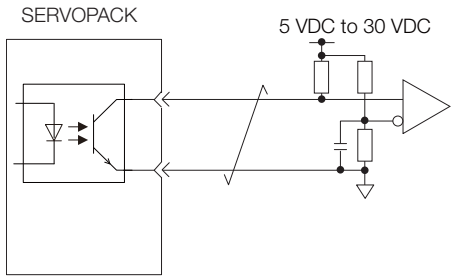

Note: The maximum allowable voltage and current range for photocoupler output circuits are as follows:
- Maximum allowable voltage: 30 VDC
- Current range: 5 mA to 50 mA DC

◆ Line-Driver Output Circuits

This section describes CN1 connector terminals 17-18 (Phase-A Signal), 19-20 (Phase-B Signal), and 21-22 (Phase-C Signal).

The serial data from the encoder is converted to two-phase (phases A and B) pulses. The resulting output signals (PAO, /PAO and PBO, /PBO), origin pulse signal (PCO and /PCO), and the absolute encoder position output signals (PSO and /PSO) are output with line-driver output circuits. Connect the line-driver output circuits to line-receiver circuits at the host controller.

Example for Line-Receiver Circuit

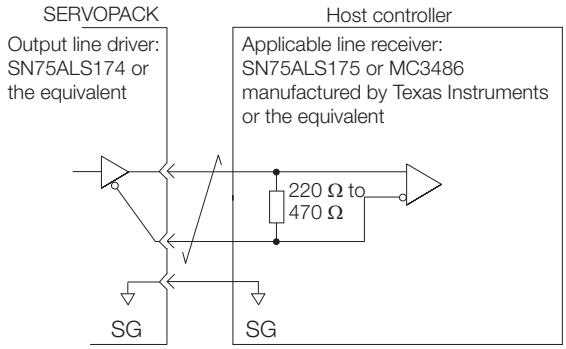

4.6 Connecting Safety Function Signals

This section describes the wiring required to use a safety function.

Refer to the following chapter for details on the safety function.

☞ *Chapter 11 Safety Functions*

4.6.1 Pin Arrangement of Safety Function Signals (CN8)

Pin No.	Signal	Name	Function
1	–	- (Do not use these pins because they are connected to internal circuits.)	
2	–		
3	/HWBB1-	Hard Wire Base Block Input 1	For a hard wire base block input. The base block (motor power turned OFF) is in effect when the signal is OFF.
4	/HWBB1+		
5	/HWBB2-	Hard Wire Base Block Input 2	
6	/HWBB2+		
7	EDM1-	External Device Monitor Output	Turns ON when the /HWBB1 and the /HWBB2 signals are input and the SERVOPACK enters a base block state.
8	EDM1+		

4.6.2 I/O Circuits

Important

For safety function signal connections, the input signal is the 0-V common and the output signal is a source output. This is opposite to other signals described in this manual.
To avoid confusion, the ON and OFF status of signals for the safety function are defined as follows:

ON: The state in which the relay contacts are closed or the transistor is ON and current flows into the signal line.
OFF: The state in which the relay contacts are open or the transistor is OFF and no current flows into the signal line.

Safety Input Circuits

Use a 0-V common to connect the safety function signals. You must connect redundant input signals.

Input Signal Connection Example

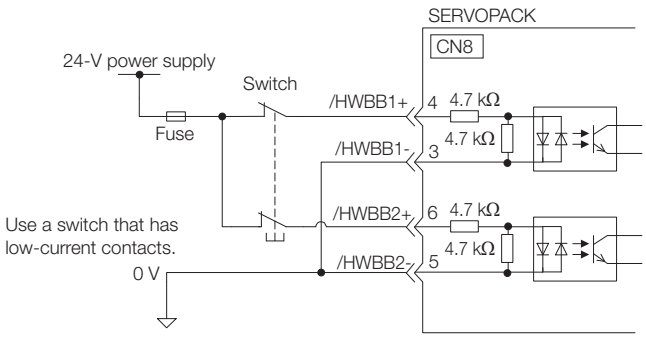

◆ Input (HWBB) Signal Specifications

Type	Signal	Connector Pin No.	Status	Meaning
Inputs	/HWBB1	CN8-4 CN8-3	ON (closed)	Does not activate the HWBB (normal operation).
			OFF (open)	Activates the HWBB (motor current shut-OFF request).
	/HWBB2	CN8-6 CN8-5	ON (closed)	Does not activate the HWBB (normal operation).
			OFF (open)	Activates the HWBB (motor current shut-OFF request).

The input (HWBB) signals have the following electrical characteristics.

Item	Characteristics	Remarks
Internal Impedance	4.7 kΩ	–
Operating Voltage Range	+24 V ±20%	–
Maximum Delay Time	8 ms	Time from /HWBB1 and /HWBB2 signals turning OFF until HWBB is activated

Diagnostic Output Circuits

The EDM1 output signal uses a source circuit. The following figure shows a connection example.

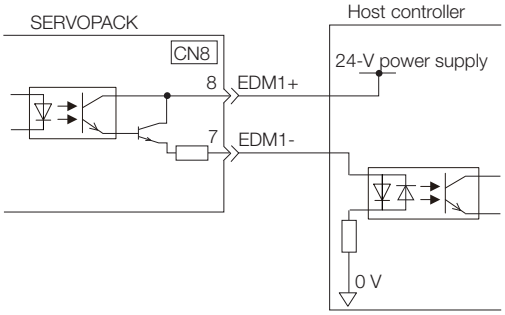

◆ EDM1 Output Signal Specifications

Type	Signal	Pin No.	Output Status	Meaning
Output	EDM1	CN8-8 CN8-7	ON	Both the /HWBB1 and /HWBB2 signals are operating normally.
			OFF	The /HWBB1 signal, the /HWBB2 signal, or both are not operating.

The electrical characteristics of the EDM1 signal are as follows:

Item	Characteristics	Remarks
Maximum Allowable Voltage	30 VDC	–
Maximum Allowable Current	50 mA DC	–
Maximum ON Voltage Drop	1.0 V	Voltage between EDM1+ and EDM1- when current is 50 mA
Maximum Delay Time	8 ms	Time from a change in /HWBB1 or /HWBB2 until a change in EDM1

4.7 Connecting MECHATROLINK-III Communications Cables (RJ-45)

Connect the MECHATROLINK-III Communications Cables (RJ-45) to the CN6A and CN6B connectors.

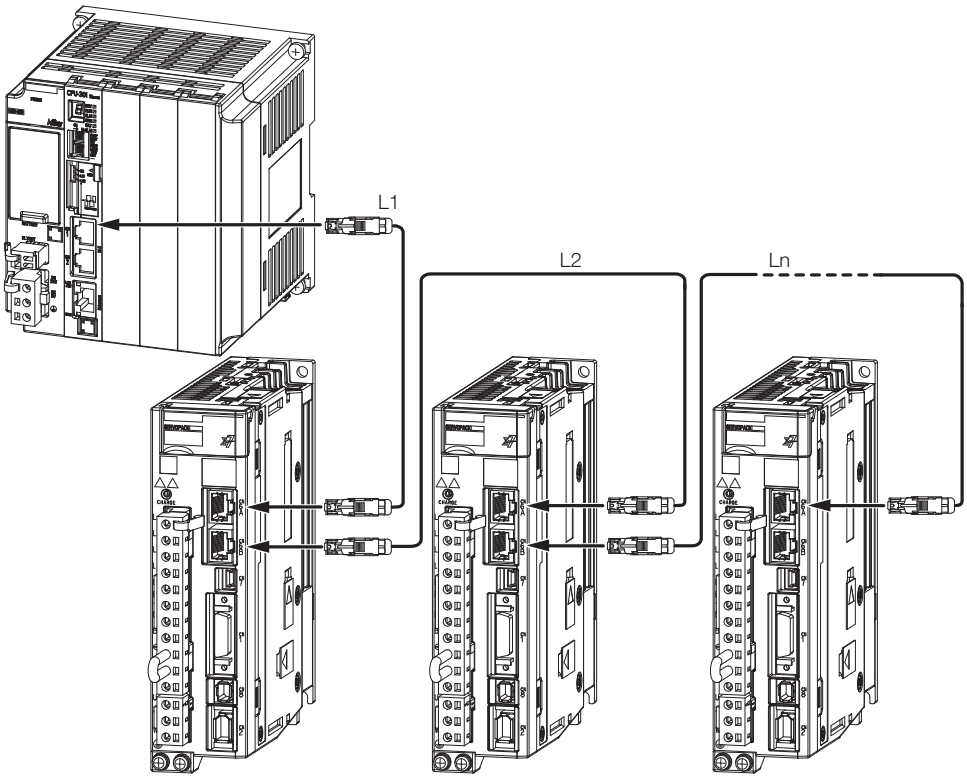

Note: The length of the cable between stations (L1, L2, ... Ln) must be 50 m or less.

Use the cables specified in the selection table for the MECHATROLINK-III Communications Cables (RJ-45). The maximum cable lengths are as follows:

- Cables with Connectors on Both Ends and No Ferrite Cores: 30 m
- Cables with Connectors on Both Ends and Ferrite Cores: 50 m

Selection Table

Type	Length (L)	Order Number*	Inquiries
Cables with Connectors on Both Ends and No Ferrite Cores	0.2 m, 0.5 m, 1 m, 2 m, 3 m, 4 m, 5 m, 10 m, 20 m, and 30 m	JZSP-CM3RR00-□□-E (□□: 00P2/00P5/01/02/03/04/05/10/20/30)	Yaskawa Controls Co., Ltd.
Cables with Connectors on Both Ends and Ferrite Cores	10 m, 20 m, 30 m, and 50 m	JZSP-CM3RR01-□□-E (□□: 10/20/30/50)	

* Replace the boxes (□□) in the order number with the code for the cable length.

External Dimensions

Cables without Ferrite Cores	Cables with Ferrite Cores
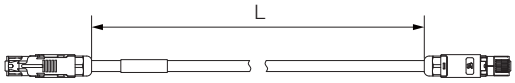	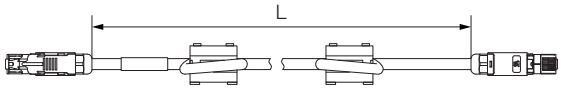

4.8 Connecting the Other Connectors

4.8.1 Serial Communications Connector (CN502)

To use an RS-422 cable to connect a Digital Operator, connect it to CN502 on the SERVOPACK. A JUSP-JC001-1 Communications Unit is required to make the connection.

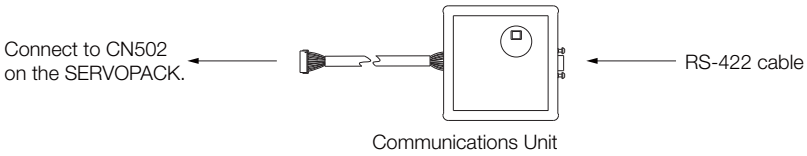

Communications Unit

Item	Description
Inquiries	Your Yaskawa representative
Order Number	JUSP-JC001-1
External Dimensions	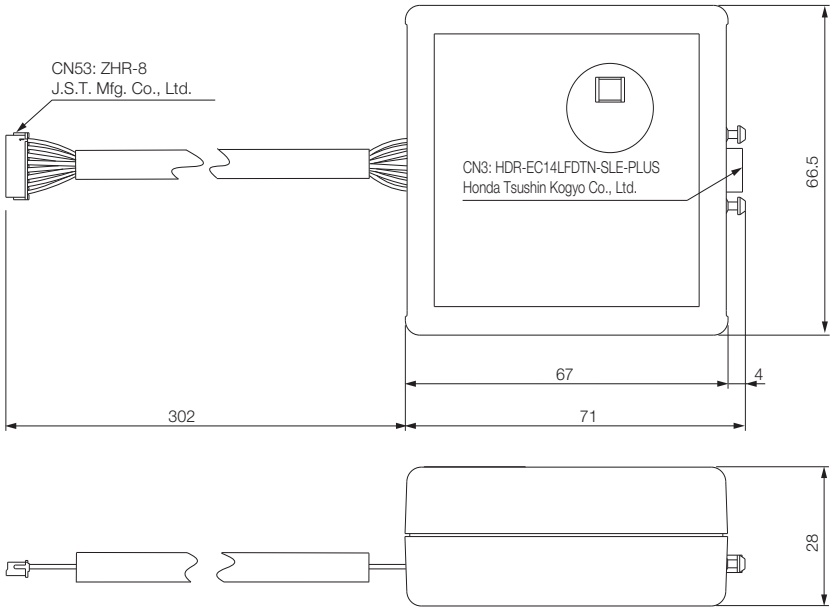

Approx. mass: 0.08 kg
Unit: mm

Refer to the following manual for the operating procedures for the Digital Operator.
Σ-7-Series Digital Operator Operating Manual (Manual No.: SIEP S800001 33)

4.8.2 Computer Connector (CN7)

To use the SigmaWin+ Engineering Tool, connect the computer on which the SigmaWin+ is installed to CN7 on the SERVOPACK.

Refer to the following manual for the operating procedures for the SigmaWin+.
AC Servo Drive Engineering Tool SigmaWin+ Operation Manual (Manual No.: SIET S800001 34)

Important

Use the Yaskawa-specified cables. Operation will not be dependable due to low noise resistance with any other cable.

4.8.3 Analog Monitor Connector (CN5)

To use an analog monitor, connect CN5 on the SERVOPACK.

• Wiring Example

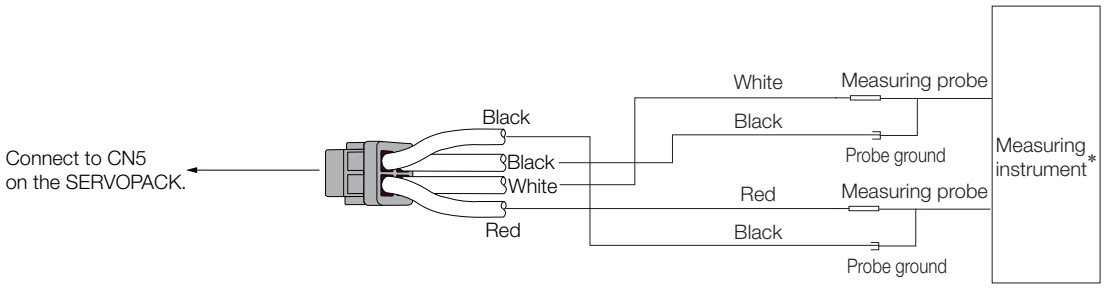

* The measuring instrument is not provided by Yaskawa.

Refer to the following section for information on the monitoring methods for an analog monitor.

☞ *9.3 Monitoring Machine Operation Status and Signal Waveforms* on page 9-7

Basic Functions That Require Setting before Operation

5

This chapter describes the basic functions that must be set before you start servo system operation. It also describes the setting methods.

5.1 Manipulating Parameters (Pn□□□) 5-4

5.1.1 Parameter Classification 5-4
5.1.2 Notation for Parameters 5-5
5.1.3 Parameter Setting Methods 5-6
5.1.4 Write Prohibition Setting for Parameters 5-8
5.1.5 Initializing Parameter Settings 5-11

5.2 MECHATROLINK-III Communications Settings . . 5-13

5.2.1 Communications Settings 5-13
5.2.2 Setting the Station Address 5-13

5.3 Power Supply Type Settings for the Main Circuit and Control Circuit . . 5-14

5.3.1 AC Power Supply Input/DC Power Supply Input Setting 5-14
5.3.2 Single-phase AC Power Supply Input/Three-phase AC Power Supply Input Setting 5-15

5.4 Automatic Detection of Connected Motor . . 5-16

5.5 Motor Direction Setting 5-17

5.6 Setting the Linear Encoder Pitch 5-18

5.7 Writing Linear Servomotor Parameters . . . 5-19

5.8 Selecting the Phase Sequence for a Linear Servomotor . . 5-23

5.9 Polarity Sensor Setting 5-25

5.10 Polarity Detection 5-26

5.10.1 Restrictions 5-26
5.10.2 Using the SV_ON (Servo ON) Command to Perform Polarity Detection 5-27
5.10.3 Using a Tool Function to Perform Polarity Detection 5-28

5.11 Overtravel and Related Settings 5-29

5.11.1 Overtravel Signals 5-30
5.11.2 Setting to Enable/Disable Overtravel 5-30
5.11.3 Motor Stopping Method for Overtravel 5-31
5.11.4 Overtravel Warnings 5-32

5.12 Holding Brake 5-34

5.12.1 Brake Operating Sequence 5-34
5.12.2 /BK (Brake) Signal 5-35
5.12.3 Output Timing of /BK (Brake) Signal When the Servomotor Is Stopped 5-36
5.12.4 Output Timing of /BK (Brake) Signal When the Servomotor Is Operating 5-37

5.13 Motor Stopping Methods for Servo OFF and Alarms . . 5-39

5.13.1 Stopping Method for Servo OFF 5-40
5.13.2 Servomotor Stopping Method for Alarms 5-40

5.14 Motor Overload Detection Level 5-42

5.14.1 Detection Timing for Overload Warnings (A.910) 5-42
5.14.2 Detection Timing for Overload Alarms (A.720) . . 5-43

5.15 Electronic Gear Settings 5-44

5.15.1 Electronic Gear Ratio Settings 5-45
5.15.2 Electronic Gear Ratio Setting Examples 5-49

5.16 Resetting the Absolute Encoder 5-50

5.16.1 Precautions on Resetting 5-50
5.16.2 Preparations 5-50
5.16.3 Applicable Tools 5-51
5.16.4 Operating Procedure 5-51

5.17 Setting the Origin of the Absolute Encoder . . 5-53

5.17.1 Absolute Encoder Origin Offset 5-53
5.17.2 Setting the Origin of the Absolute Linear Encoder 5-53

5.18 Setting the Regenerative Resistor Capacity . . . 5-56

5.19 Σ-V Compatible Function and Settings 5-57
5.19.1 Setting the Communications Interface Compatibility Selection 5-57
5.19.2 Setting the Encoder Resolution Compatibility Selection 5-58

5.1 Manipulating Parameters (Pn□□□)

This section describes the classifications, notation, and setting methods for the parameters given in this manual.

5.1.1 Parameter Classification

There are the following two types of SERVOPACK parameters.

Classification	Meaning
Setup Parameters	Parameters for the basic settings that are required for operation.
Tuning Parameters	Parameters that are used to adjust servo performance.

Important

When you edit parameters with the SigmaWin+, setup parameters and tuning parameters are displayed.
When you edit parameters with a Digital Operator, only setup parameters are displayed by default. To edit tuning parameters, set Pn00B to n.□□□1 (Display all parameters).

Parameter		Meaning	When Enabled	Classification
Pn00B	n.□□□0 (default setting)	Display only setup parameters.	After restart	Setup
	n.□□□1	Display all parameters.		

The setting method for each type of parameter is described below.

Setup Parameters

You can use the Digital Operator, or SigmaWin+ to set the setup parameters individually.

Information

We recommend that you use the Setup Wizard of the SigmaWin+ to easily set the required setup parameters by setting the operating methods, machine specifications, and I/O signals according to on-screen Wizard instructions.

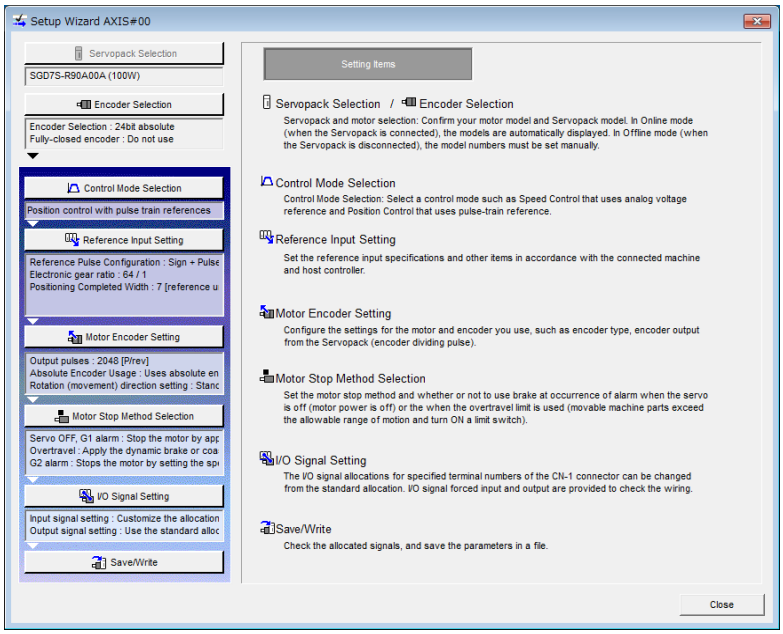

Tuning Parameters

Normally the user does not need to set the tuning parameters individually.

Use the various SigmaWin+ tuning functions to set the related tuning parameters to increase the response even further for the conditions of your machine. Refer to the following sections for details.

☞ *8.6 Autotuning without Host Reference* on page 8-24
☞ *8.7 Autotuning with a Host Reference* on page 8-35
☞ *8.8 Custom Tuning* on page 8-42

You can also set the tuning parameters individually to make adjustments. Refer to the following section for details.

☞ *8.13 Manual Tuning* on page 8-81

5.1.2 Notation for Parameters

There are two types of notation used for parameters that depend on whether the parameter requires a numeric setting (parameter for numeric setting) or requires the selection of a function (parameter for selecting a function).

- Parameters for Numeric Settings

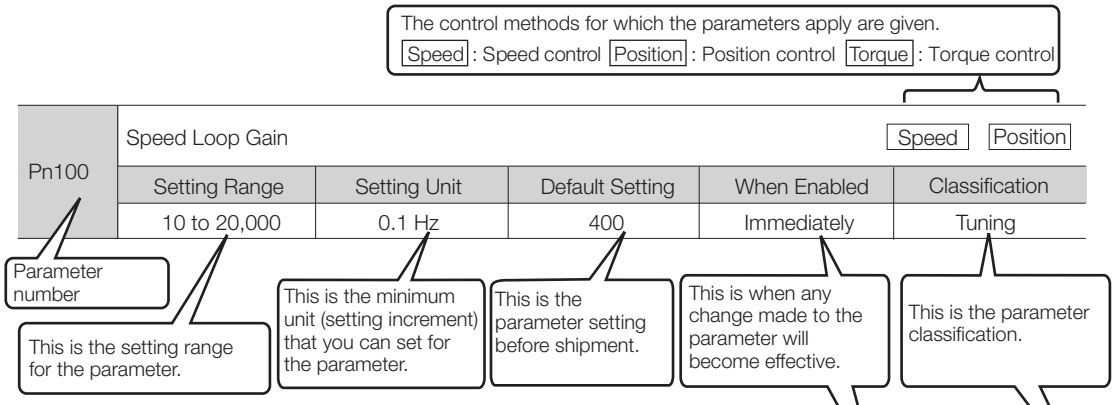

- Parameters for Selecting Functions

Parameter		Meaning	When Enabled	Classification
Pn002	n.□0□□ (default setting)	Use the encoder according to encoder specifications.	After restart	Setup
	n.□1□□	Use the encoder as an incremental encoder.		
	n.□2□□	Use the encoder as a single-turn absolute encoder.		

Parameter number

The notation "n.□□□□" indicates a parameter for selecting functions.
Each □ indicates the setting for one digit.
The notation shown here means that the third digit from the right is set to 2.

This column explains the selections for the function.

5.1.3 Parameter Setting Methods

You can use the SigmaWin+ or a Digital Operator to set parameters.
Use the following procedure to set the parameters.

Setting Parameters with the SigmaWin+

1. Click the Servo Drive Button in the workspace of the Main Window of the SigmaWin+.

2. Select **Edit Parameters** in the Menu Dialog Box.
   The Parameter Editing Dialog Box will be displayed.

3. Click the cell of the parameter to edit.
   If the parameter to edit is not displayed in the Parameter Editing Dialog Box, click the ▲ or ▼ Button to display the parameter to edit.

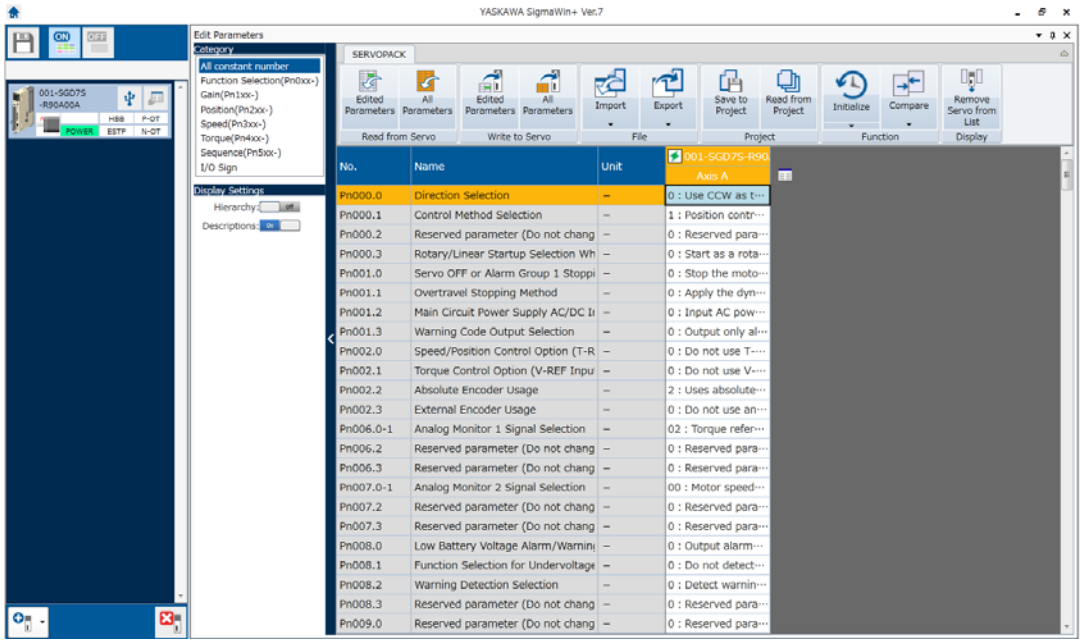

4. Change the setting of the parameter.

   Information
   1. For a parameter for a numeric setting, input the numeric setting.
   2. If the parameter requires selection of a function, select the function from the list of selections.

5. Press the **Enter** Key.
   The background of the edited parameter cell will change to green.

6. Select **Edited Parameters** in the **Write to Servo** Group.

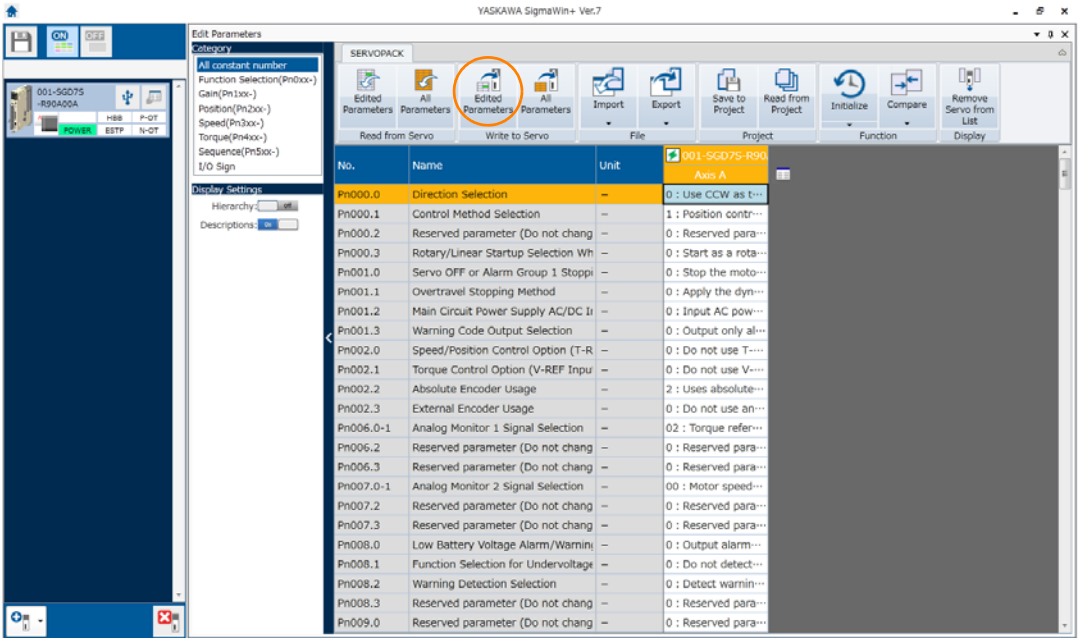

The edited parameters are written to the SERVOPACK and the backgrounds of the cells change to white.

7. Click the **OK** Button.

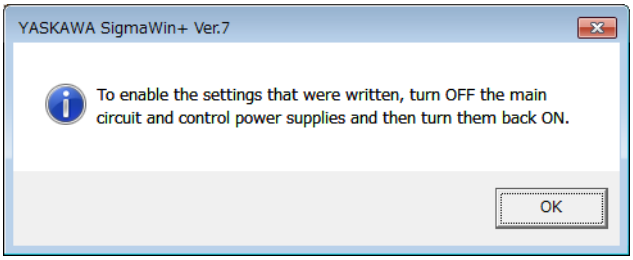

8. To enable changes to the settings, turn the power supply to the SERVOPACK OFF and ON again.

This concludes the procedure to set the parameters.

Setting Parameters with a Digital Operator

Refer to the following manual for information on setting the parameters with a Digital Operator.

Σ-7-Series Digital Operator Operating Manual (Manual No.: SIEP S800001 33)

5.1.4 Write Prohibition Setting for Parameters

You can prohibit writing parameters from the Digital Operator.
Even if you do, you will still be able to change parameter settings from the SigmaWin+.

Preparations

No preparations are required.

Applicable Tools

The following table lists the tools that you can use to change the Write Prohibition Setting and the applicable tool functions.

Tool	Function	Reference
Digital Operator	Fn010	Σ-7-Series Digital Operator Operating Manual (Manual No.: SIEP S800001 33)
SigmaWin+	***Others - Write Prohibited Setting***	*Operating Procedure* on page 5-8

Operating Procedure

Use the following procedure to prohibit or permit writing parameter settings.

1. Click the Servo Drive Button in the workspace of the Main Window of the SigmaWin+.
2. Select **Write Prohibition Setting** in the Menu Dialog Box.
   The Write Prohibition Setting Dialog Box will be displayed.
3. Press the ▼ or ▲ for the rightmost digit and set one of the following.
   0000: Writing is permitted (default setting).
   0001: Writing is prohibited.

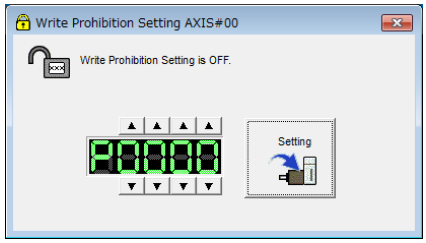

4. Click the **Setting** Button.

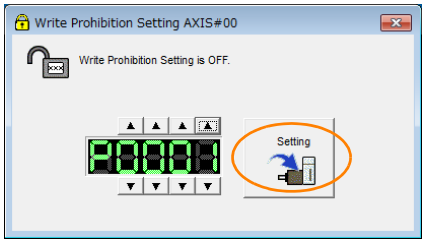

5. Click the **OK** Button.
   The setting will be written to the SERVOPACK.

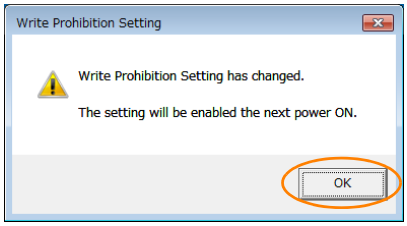

6. To enable the new setting, turn the power supply to the SERVOPACK OFF and ON again.

This concludes the procedure to prohibit or permit writing parameter settings.

Restrictions

If you prohibit writing parameter settings, you will no longer be able to execute some functions. Refer to the following table.

SigmaWin+		Digital Operator		When Writing Is Prohibited	Reference
Button in Menu Dialog Box	SigmaWin+ Function Name	Fn No.	Utility Function Name		
Basic Functions	Initialize*1	Fn005	Initializing Parameters	Cannot be executed.	page 5-11
	Software Reset	Fn030	Software Reset	Can be executed.	page 6-48
	Product Information	Fn011	Display Servomotor Model	Can be executed.	page 9-2
		Fn012	Display Software Version	Can be executed.	
		Fn01E	Display SERVOPACK and Servomotor IDs	Can be executed.	
		Fn01F	Display Servomotor ID from Feedback Option Module	Can be executed.	
Encoder Setting	Reset Absolute Encoder	Fn008	Reset Absolute Encoder	Cannot be executed.	page 5-51
	Multi-turn Limit Setup	Fn013	Multiturn Limit Setting after Multiturn Limit Disagreement Alarm	Cannot be executed.	page 6-40
	Search Origin*2	Fn003	Origin Search	Cannot be executed.	page 7-19
	Zero Point Position Setting	Fn020	Set Absolute Linear Encoder Origin	Cannot be executed.	page 5-53
	Polarity Detection	Fn080	Polarity Detection	Cannot be executed.	page 5-28
Trouble-shooting	Display Alarm	Fn000	Display Alarm History	Can be executed.	page 12-43
		Fn006	Clear Alarm History	Cannot be executed.	page 12-44
		Fn014	Reset Option Module Configuration Error	Cannot be executed.	page 12-45
	Reset Motor Type Alarm	Fn021	Reset Motor Type Alarm	Cannot be executed.	page 12-47
Operation	Jog	Fn002	Jog	Cannot be executed.	page 7-7
	Program JOG Operation	Fn004	Jog Program	Cannot be executed.	page 7-14

Continued on next page.

Continued from previous page.

SigmaWin+		Digital Operator		When Writing Is Prohibited	Reference
Button in Menu Dialog Box	SigmaWin+ Function Name	Fn No.	Utility Function Name		
Tuning	Tuning - Autotuning without Host Reference	Fn201	Advanced Autotuning without Reference	Cannot be executed.	page 8-24
	Tuning - Autotuning with Host Reference	Fn202	Advanced Autotuning with Reference	Cannot be executed.	page 8-35
	Tuning - Custom Tuning	Fn203	One-Parameter Tuning	Cannot be executed.	page 8-42
	Tuning - Custom Tuning - Adjust Anti-resonance Control	Fn204	Adjust Anti-resonance Control	Cannot be executed.	page 8-51
	Tuning - Custom Tuning - Vibration Suppression	Fn205	Vibration Suppression	Cannot be executed.	page 8-56
	Response Level Setting	Fn200	Tuning-less Level Setting	Cannot be executed.	page 8-16
Diagnostic	Easy FFT	Fn206	Easy FFT	Cannot be executed.	page 8-97
Others	Adjust the Analog Monitor Output	Fn00C	Adjust Analog Monitor Output Offset	Cannot be executed.	page 9-9
		Fn00D	Adjust Analog Monitor Output Gain	Cannot be executed.	
	Adjust the Motor Current Detection Offsets	Fn00E	Autotune Motor Current Detection Signal Offset	Cannot be executed.	page 6-55
		Fn00F	Manually Adjust Motor Current Detection Signal Offset	Cannot be executed.	
	Initialize Vibration Detection Level	Fn01B	Initialize Vibration Detection Level	Cannot be executed.	page 6-51
	Write Prohibited Setting	Fn010	Write Prohibition Setting	Can be executed.	page 5-8

*1. An **Initialize** Button will be displayed in the Parameter Editing Dialog Box.
*2. Cannot be used when connecting a Linear Servomotor.

5.1.5 Initializing Parameter Settings

You can return the parameters to their default settings.

This function will not initialize the settings of the parameters that are adjusted for the Fn00C, Fn00D, Fn00E, and Fn00F utility functions.

> **Important**
> To enable the new settings, turn the power supply to the SERVOPACK OFF and ON again after you complete the operation.

Preparations

Always check the following before you initialize the parameter settings.

- The parameters must not be write prohibited.
- The servo must be OFF.

Applicable Tools

The following table lists the tools that you can use to initialize the parameter settings and the applicable tool functions.

Tool	Function	Reference
Digital Operator	Fn005	Σ-7-Series Digital Operator Operating Manual (Manual No.: SIEP S800001 33)
SigmaWin+	***Basic Functions - Edit Parameters***	*Operating Procedure* on page 5-12

Operating Procedure

Use the following procedure to initialize the parameter settings.

1. Click the Servo Drive Button in the workspace of the Main Window of the SigmaWin+.
2. Select **Edit Parameters** in the Menu Dialog Box.
   The Parameter Editing Dialog Box will be displayed.
3. Select any parameter of the axis to initialize.
4. Click the **Initialize** Button in the **Function** Group.

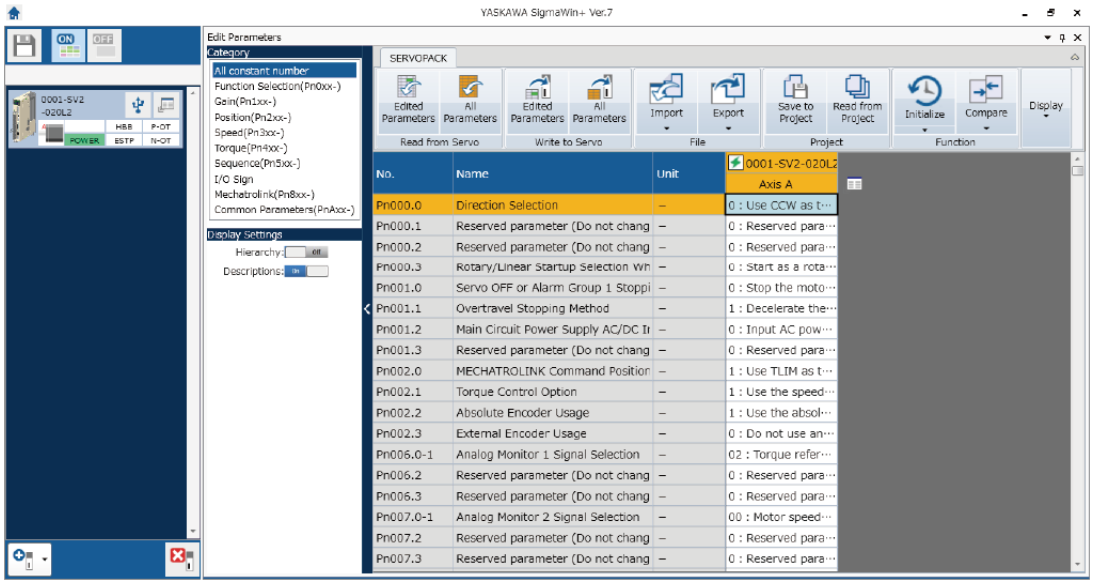

5. Click the **OK** Button.

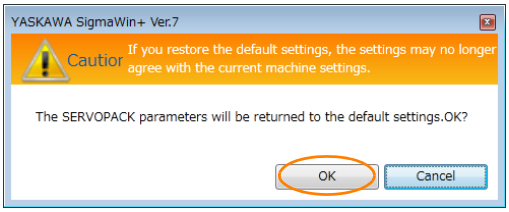

Click the **Cancel** Button to cancel initialization. The Parameter Editing Dialog Box will return.

6. Click the **OK** Button.

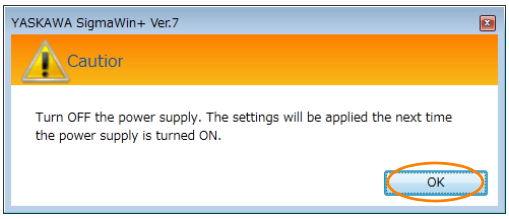

7. Turn the power supply to the SERVOPACK OFF and ON again after the parameter settings have been initialized.

This concludes the procedure to initialize the parameter settings.

5.2 MECHATROLINK-III Communications Settings

The settings for MECHATROLINK-III communications are made with the DIP switch (S3).
The station address is set using the rotary switches (S1 and S2).

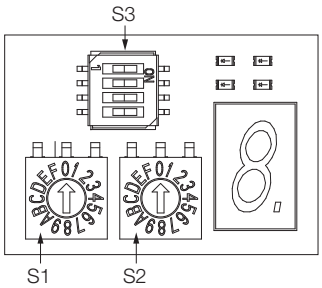

5.2.1 Communications Settings

Use the DIP switch (S3) to make the communications settings.

Pin No.	Function	Setting			Default Setting
		1	2	Description	
1, 2	Sets the number of transmission bytes.	OFF	OFF	Reserved. (Do not change.)	1: OFF 2: ON
		ON	OFF	32 bytes	
		OFF	ON	48 bytes	
		ON	ON	Reserved. (Do not change.)	
3	Reserved. (Do not change.)				OFF
4	Reserved. (Do not change.)				OFF

Important

- If you will use the MECHATROLINK-III standard servo profile, set the number of transmission bytes to either 32 or 48.
- To enable the new setting, turn the power supply to the SERVOPACK OFF and ON again after you change the communications switches (S1, S2, and S3) .

5.2.2 Setting the Station Address

Use the rotary switches (S1 and S2) to set the station address.

Station Address	S1	S2
00h to 02h: Disabled (Do not set.)	0	0 to 2
03h (default setting)	0	3
04h	0	4
⋮	⋮	⋮
EFh	E	F
F0h to FFh: Disabled (Do not set.)	F	0 to F

5.3 Power Supply Type Settings for the Main Circuit and Control Circuit

A SERVOPACK with a 200-VAC power supply input can be operated on either an AC power supply input or DC power supply input to the main and control circuits. If you select an AC power supply input, you can operate the SERVOPACK on either a single-phase power supply input or a three-phase power supply input. This section describes the settings related to the power supplies.

Important

You cannot input DC power to a SERVOPACK with a single-phase, 100-VAC power supply input.

5.3.1 AC Power Supply Input/DC Power Supply Input Setting

Set Pn001 = n.□X□□ (Main Circuit Power Supply AC/DC Input Selection) to specify whether to use an AC or DC power supply input for the main circuit power supply to the SERVOPACK.

If the setting of Pn001 = n.□X□□ does not agree with the actual power supply input, an A.330 alarm (Main Circuit Power Supply Wiring Error) will occur.

Example

Examples of When an A.330 Alarm (Main Circuit Power Supply Wiring Error) Occurs
- A DC power supply is connected between the B1/⊕ and ⊖2 terminals, but an AC power supply input is specified (Pn001 = n.□0□□).
- An AC power supply is input to the L1, L2, and L3 terminals, but a DC power supply is specified (Pn001 = n.□1□□).

Parameter		Meaning	When Enabled	Classification
Pn001	n.□0□□ (default setting)	Use an AC power supply input.	After restart	Setup
	n.□1□□	Use a DC power supply input.		

WARNING

- **Connect the AC or DC power supplies to the specified SERVOPACK terminals.**
  - Connect an AC power supply to the L1, L2, and L3 terminals and the L1C and L2C terminals on the SERVOPACK.
  - Connect a DC power supply to the B1/⊕ and ⊖2 terminals and the L1C and L2C terminals on the SERVOPACK.

  There is a risk of failure or fire.
- **Always specify a DC power supply input (Pn001 = n.□1□□) before you input DC power for the main circuit power supply.**
  If you input DC power without specifying a DC power supply input (i.e., without setting Pn001 to n.□1□□), the SERVOPACK's internal elements may burn and may cause fire or damage to the equipment.
- **With a DC power supply input, time is required to discharge electricity after the main power supply is turned OFF. A high residual voltage may remain in the SERVOPACK after the power supply is turned OFF. Be careful not to get an electric shock.**
- **Install fuses on the power supply line if you use DC power.**
- **The Servomotor returns regenerative energy to the power supply. If you use a SERVOPACK with a DC power supply input, regenerative energy is not processed. Process the regenerative energy at the power supply.**
- **If you use a DC power supply input with any of the following SERVOPACKs, externally connect an inrush current limiting circuit and use the power ON and OFF sequences recommended by Yaskawa: SGD7S-330A, -470A, -550A, -590A, or -780A.**
  There is a risk of equipment damage.
  Refer to the following section for the power ON and OFF sequences.
  ☞ *4.3.3 Power ON Sequence* on page 4-14

Refer to the following section for information on wiring the SERVOPACK.
☞ *4.3.4 Power Supply Wiring Diagrams* on page 4-16

5.3.2 Single-phase AC Power Supply Input/Three-phase AC Power Supply Input Setting

Some models of Three-phase 200-VAC SERVOPACKs can also operate on a single-phase 200-VAC power supply.

You can use a single-phase, 200-V power supply input with the following models.

- SGD7S-R70A, -R90A, -1R6A, -2R8A, and -5R5A

If you use a single-phase, 200-VAC power supply input for the SERVOPACK's main circuit power supply, set parameter Pn00B to n.□1□□ (Use a three-phase power supply input as a single-phase power supply input).

Information: You do not need to change the setting of Pn00B to n.□1□□ (Use a three-phase power supply input as a single-phase power supply input) for a SERVOPACK with a single-phase 200-VAC power supply input (model numbers: SGD7S-120A□□□008) or for a SERVOPACK with a single-phase 100-VAC power supply input.

Parameter		Meaning	When Enabled	Classification
Pn00B	n.□0□□ (default setting)	Use a three-phase power supply input.	After restart	Setup
	n.□1□□	Use a three-phase power supply input and as a single-phase power supply input.		

Important

1. If you use a single-phase power supply input without specifying a single-phase AC power supply (Pn00B = n.□1□□), an A.F10 alarm (Power Supply Line Open Phase) will occur.
2. Not all SERVOPACKs can be run on a single-phase AC power supply input. If you connect a single-phase AC power supply input to a SERVOPACK that does not support single-phase power, an A.F10 alarm (Power Supply Line Open Phase) will occur.
3. If you use a single-phase 200-VAC power supply input, the torque-motor speed characteristic of the Servomotor will not be the same as for a three-phase AC power supply input. Decide whether to use a single-phase or three-phase AC power supply input after checking the characteristics given in the Servomotor manual or catalog.

Refer to the following section for information on wiring a single-phase AC power supply input to the SERVOPACK.

☞ • *Wiring Example for Single-Phase, 200-VAC Power Supply Input* on page 4-17

5.4 Automatic Detection of Connected Motor

You can use a SERVOPACK to operate either a Rotary Servomotor or a Linear Servomotor.

If you connect the Servomotor encoder to the CN2 connector on the SERVOPACK, the SERVOPACK will automatically determine which type of Servomotor is connected. Therefore, you normally do not need to specify the Servomotor type.

Information

If an encoder is not connected, e.g., for a test without a motor, you can specify a Rotary Servomotor or a Linear Servomotor in Pn000 = n.X□□□ (Rotary/Linear Startup Selection When Encoder Is Not Connected). If you specify either a Rotary or Linear Servomotor, only the parameters, monitors, alarms, and functions for the specified motor type will be enabled.

Parameter		Meaning	When Enabled	Classification
Pn000	n.0□□□ (default setting)	When an encoder is not connected, start as SERVOPACK for Rotary Servomotor.	After restart	Setup
	n.1□□□	When an encoder is not connected, start as SERVOPACK for Linear Servomotor.		

5.5 Motor Direction Setting

You can reverse the direction of Servomotor rotation by changing the setting of Pn000 = n.□□□X (Rotation Direction Selection) without changing the polarity of the speed or position reference. This causes the rotation direction of the Servomotor to change, but the polarity of the signals, such as encoder output pulses, output from the SERVOPACK do not change. Set the appropriate direction for your system.

Refer to the following section for details on the encoder divided pulse output.

☞ *6.5 Encoder Divided Pulse Output* on page 6-20

- Rotary Servomotors

The default setting for forward rotation is counterclockwise (CCW) as viewed from the load end of the Servomotor.

Parameter		Forward/Reverse Reference	Motor Direction and Encoder Divided Pulse Outputs	Applicable Overtravel Signal (OT)
Pn000	n.□□□0 Use CCW as the forward direction. (default setting)	Forward reference	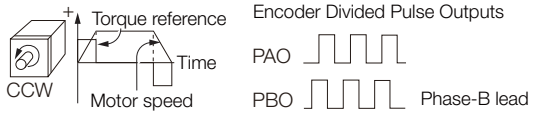	P-OT (Forward Drive Prohibit) signal
		Reverse reference	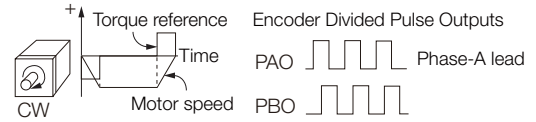	N-OT (Reverse Drive Prohibit) signal
	n.□□□1 Use CW as the forward direction. (Reverse Rotation Mode)	Forward reference	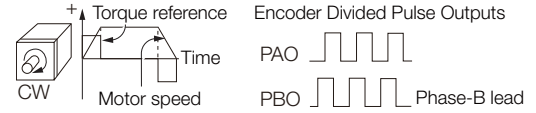	P-OT (Forward Drive Prohibit) signal
		Reverse reference	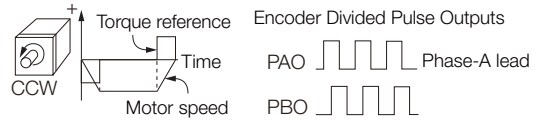	N-OT (Reverse Drive Prohibit) signal

Note: The trace waveforms of the SigmaWin+ are shown in the above table for the torque reference and motor speed diagrams. If you measure them on a measuring instrument, e.g., with an analog monitor, the polarity will be reversed.

- Linear Servomotors

Before you set this parameter, make sure that Pn080 = n.□□X□ (Motor Phase Sequence Selection) is set correctly.

Parameter		Forward/Reverse Reference	Motor Moving Direction and Encoder Divided Pulse Outputs	Applicable Overtravel Signal (OT)
Pn000	n.□□□0 Use the direction in which the linear encoder counts up as the forward direction. (default setting)	Forward reference	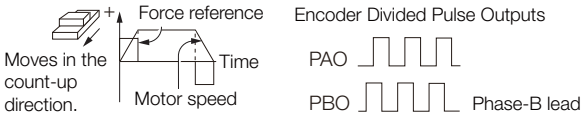	P-OT (Forward Drive Prohibit) signal
		Reverse reference	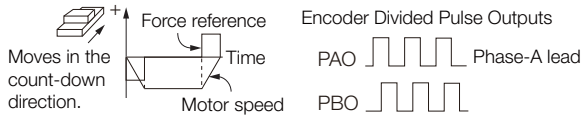	N-OT (Reverse Drive Prohibit) signal
	n.□□□1 Use the direction in which the linear encoder counts down as the forward direction.	Forward reference	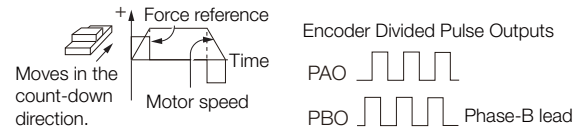	P-OT (Forward Drive Prohibit) signal
		Reverse reference	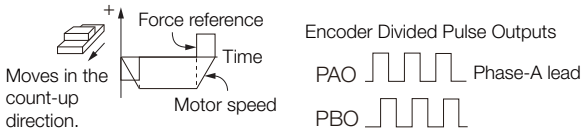	N-OT (Reverse Drive Prohibit) signal

Note: The trace waveforms of the SigmaWin+ are shown in the above table for the force reference and motor speed diagrams. If you measure them on a measuring instrument, e.g., with an analog monitor, the polarity will be reversed.

5.6 Setting the Linear Encoder Pitch

If you connect a linear encoder to the SERVOPACK through a Serial Converter Unit, you must set the scale pitch of the linear encoder in Pn282.

If a Serial Converter Unit is not connected, you do not need to set Pn282.

Term

Serial Converter Unit
The Serial Converter Unit converts the signal from the linear encoder into a form that can be read by the SERVOPACK.

Scale Pitch
A linear encoder has a scale for measuring lengths (positions). The length of one division on this scale is the scale pitch.

Pn282	Linear Encoder Pitch			Speed / Position / Force	
	Setting Range	Setting Unit	Default Setting	When Enabled	Classification
	0 to 6,553,600	0.01 μm	0	After restart	Setup

You will not be able to control the Linear Servomotor if Pn282 is not set correctly. Check the above table and always set the correct value before you operate the Linear Servomotor.

Type of Linear Encoder	Manufacturer	Model	Serial Converter Unit Model	Linear Encoder Pitch [μm]
Incremental	Dr. JOHANNES HEIDENHAIN GmbH	LIDA48□	JZDP-H003-□□□-E	20
			JZDP-J003-□□□-E	
		LIF48□	JZDP-H003-□□□-E	4
			JZDP-J003-□□□-E	
	Renishaw PLC	RGH22B	JZDP-H005-□□□-E	20
			JZDP-J005-□□□-E	

The first time you supply power to the SERVOPACK, the panel display on the front of the Servomotor will display an A.080 alarm (Linear Encoder Pitch Setting Error). The A.080 alarm is displayed because the setting of Pn282 has not been changed. The A.080 alarm will be cleared when you change the setting of Pn282 and then turn the power supply OFF and ON again.

Information

Linear Encoder Pitch
If you do not use a Serial Converter Unit, the linear encoder pitch is automatically set. It is not necessary to set Pn282. You can use the SigmaWin+ to check the linear encoder pitch that was automatically set. Refer to the following section for details.
☞ *9.1 Monitoring Product Information* on page 9-2

5.7 Writing Linear Servomotor Parameters

If you connect a linear encoder to the SERVOPACK without going through a Serial Converter Unit, you must use the SigmaWin+ to write the motor parameters to the linear encoder. The motor parameters contain the information that is required by the SERVOPACK to operate the Linear Servomotor.

⚠ WARNING

- **Check the Servomotor and linear encoder information before you write the motor parameters.**
  If you do not write the correct motor parameters, the Servomotor may run out of control or burning may occur, possibly resulting in equipment damage or fire.

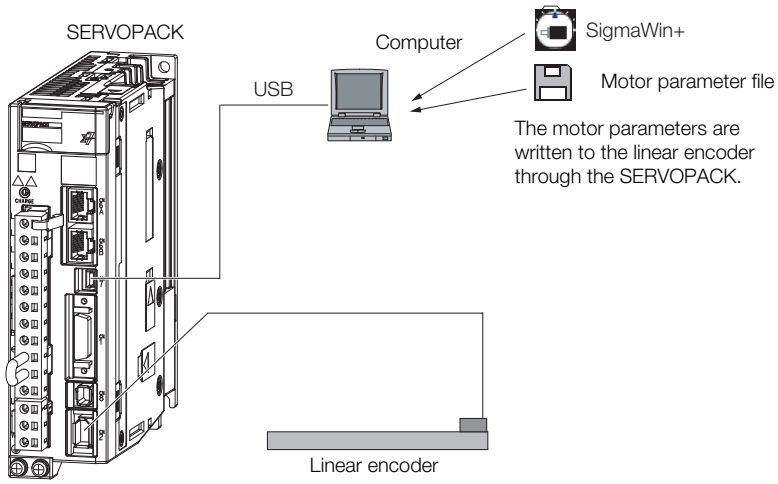

Important

Serial number information is not included in the motor parameters. You cannot use the monitor functions of the SERVOPACK to monitor the serial number.
If you attempt to monitor the serial number, ********** will be displayed.

Precautions

- If the encoder parameters are not written to the linear encoder, an A.CA0 alarm (Encoder Parameter Error) will occur. Consult the manufacturer of the linear encoder.
- If the motor parameters are not written to the linear encoder, an A.CA0 alarm (Encoder Parameter Error) will not occur, but the following alarms will occur.
  A.040 (Parameter Setting Error), A.041 (Encoder Output Pulse Setting Error),
  A.050 (Combination Error), A.051 (Unsupported Device Alarm),
  A.550 (Maximum Speed Setting Error), A.710 (Instantaneous Overload),
  A.720 (Continuous Overload), and A.C90 (Encoder Communications Error)

Applicable Tools

The following table lists the tools that you can use to write the parameters to the Linear Servomotor and the applicable tool functions.

Tool	Function	Reference
Digital Operator	You cannot write Linear Servomotor parameters from the Digital Operator.	
SigmaWin+	***Encoder Setting – Motor Parameter Scale Write***	☞ *Operating Procedure* on page 5-20

Operating Procedure

Use the following procedure to write the motor parameters to the Linear Encoder.

1. Prepare the motor parameter file to write to the linear encoder.

2. Click the Servo Drive Button in the workspace of the Main Window of the SigmaWin+.

3. Select **Motor Parameter Scale Write** in the Menu Dialog Box.
   The Motor Parameter Scale Write Dialog Box will be displayed.

4. Click the **OK** Button.

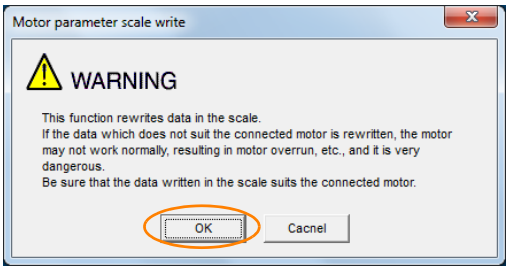

   Click the **Cancel** Button to cancel writing the motor parameters to the linear encoder. The Main Window will return.
   If the write is completed normally, the Motor Parameter Scale Write - File Select Dialog Box will be displayed.

5. Click the **Ref.** Button.

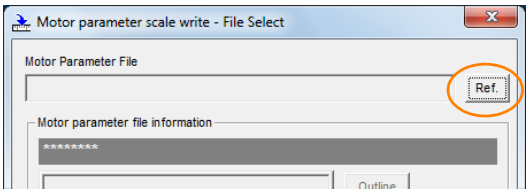

6. Select the motor parameter file that you prepared and click the **Open** Button.

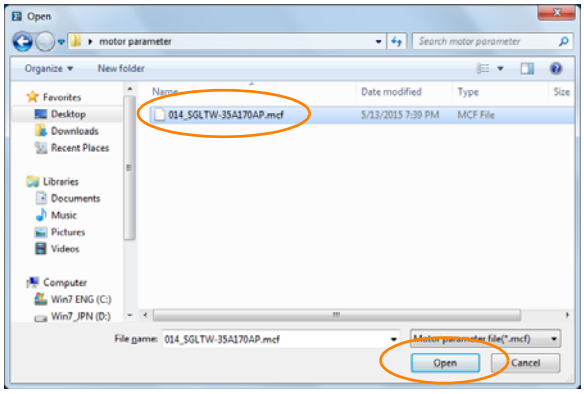

7. Confirm that the motor parameter file information that is displayed is suitable for your Servomotor, and then click the **Next** Button.

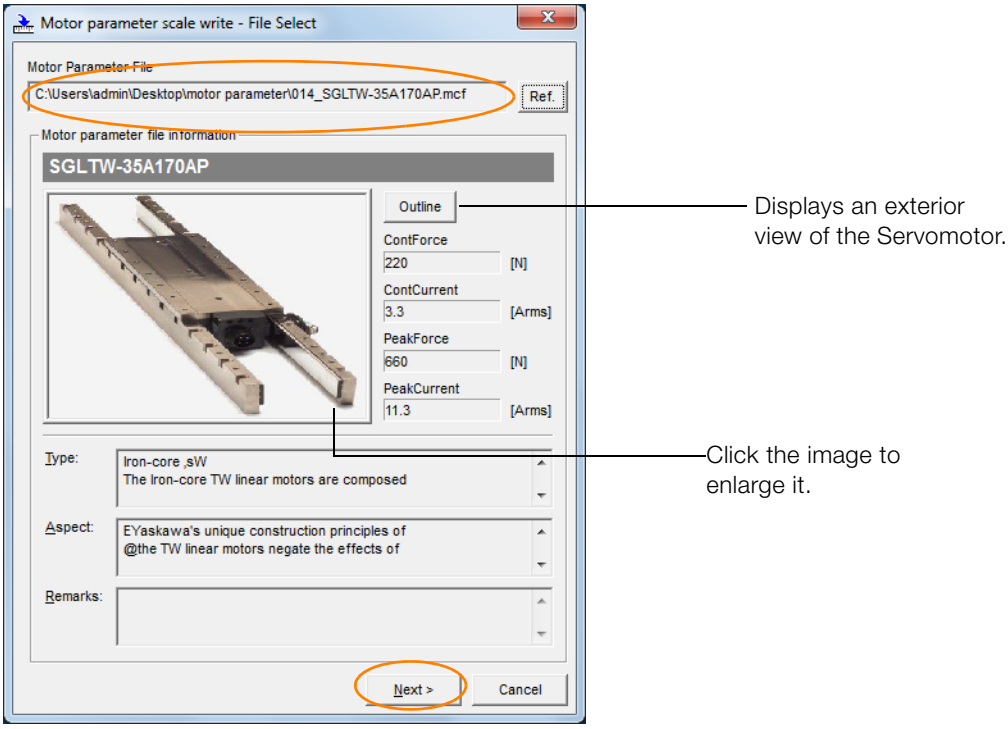

Click the **Cancel** Button to cancel writing the motor parameters to the linear encoder. The Main Window will return.

8. Click the **Write** Button.

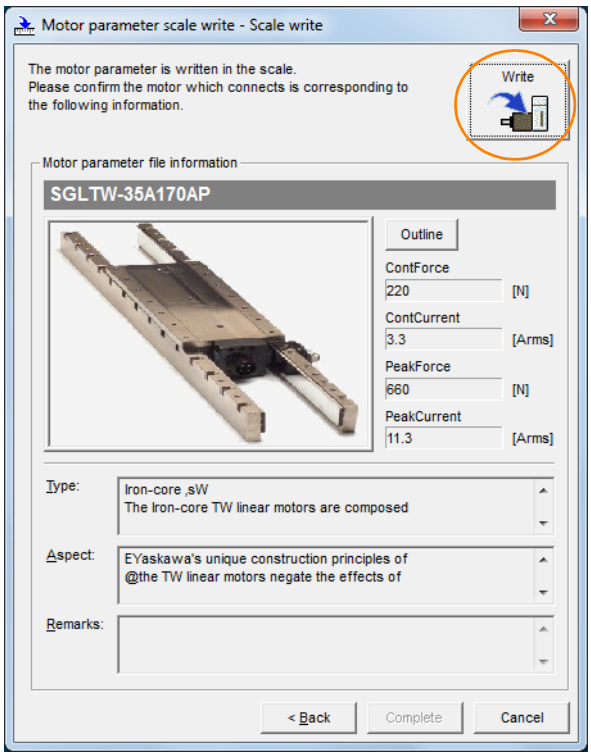

9. Click the **Yes** Button.

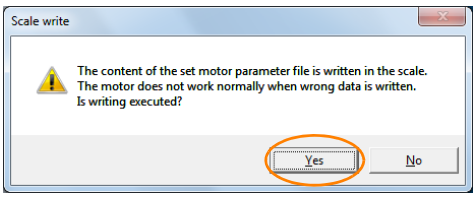

Click the **No** Button to cancel writing the motor parameters to the linear encoder.

If you click the **Yes** Button, writing the motor parameter scale will start.

10. Click the **Complete** Button.

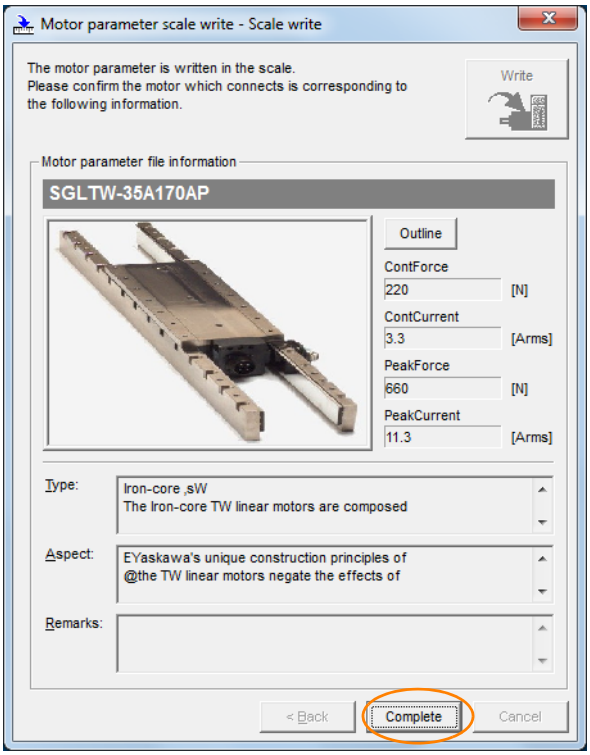

11. Click the **OK** Button.

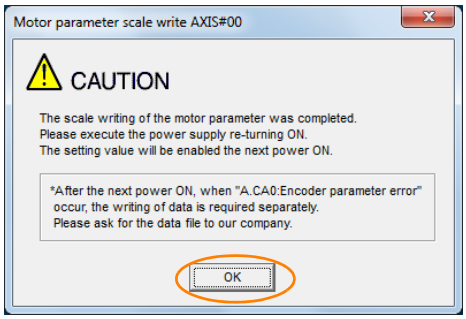

12. Turn the power supply to the SERVOPACK OFF and ON again.

This concludes the procedure to write the motor parameters.

Confirming If the Motor Parameters Have Been Written

After you write the motor parameters, you can use a monitor function to confirm that the motor parameters are in the encoder.

If the motor parameters have not been written, no information on the Servomotor will be displayed.

☞ *9.1 Monitoring Product Information* on page 9-2

5.8 Selecting the Phase Sequence for a Linear Servomotor

You must select the phase sequence of the Linear Servomotor so that the forward direction of the Linear Servomotor is the same as the encoder's count-up direction.

Before you set the Linear Servomotor phase sequence (Pn080 = n.□□X□), check the following items.

- Confirm that the signal from the linear encoder is being received normally.
- Make sure that the forward direction of the Linear Servomotor and the count-up direction of the linear encoder are in the same direction.

Important

If you do not confirm the above items before you attempt to operate the Servomotor, the Servomotor may not operate or it may run out of control. Always confirm these items before you operate the Servomotor.

Related Parameters

Parameter		Meaning	When Enabled	Classification
Pn080	n.□□0□ (default setting)	Set a phase-A lead as a phase sequence of U, V, and W.	After restart	Setup
	n.□□1□	Set a phase-B lead as a phase sequence of U, V, and W.		

Setting Procedure

Use the following procedure to select the phase sequence for a Linear Servomotor.

1. **Set Pn000 to n.□□□0 (Set a phase-A lead as a phase sequence of U, V, and W).**
   This setting is to make following confirmation work easier to understand.

2. **Select Monitor in the Menu Dialog Box.**
   The Operation Pane will be displayed so that you can check the feedback pulse counter.
   To check the feedback pulse counter with the Digital Operator, use Un00D (Feedback Pulse Counter).

3. **Manually move the Moving Coil from one end to the other of the stroke and confirm that only the correct number of feedback pulses is returned.**
   If the correct number and only the correct number of pulses is returned, the signal is being received correctly from the linear encoder.

   Example

   In this example, assume that a linear encoder with a scale pitch of 20 μm and a resolution of 256 is used. If you manually move the Moving Coil 1 cm in the count-up direction of the linear encoder, the number of feedback pulses would be as follows:
   1 cm/(20 μm/256) = 128,000 pulses

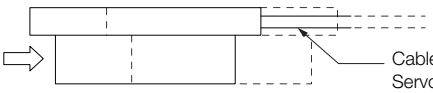

If there are 128,000 pulses on the feedback pulse counter after you manually move the Moving Coil in the direction of the cable, you have completed the confirmation.

Note: The actual monitor display will be offset by the error in the travel distance. There is no problem as long as the above value is close to the calculated value.

Information

If the correct value is not displayed for the feedback pulse counter, the following conditions may exist. Check the situation and correct any problems.

- The linear encoder pitch is not correct.
  If the scale pitch that is set in Pn282 does not agree with the actual scale pitch, the expected number of feedback pulses will not be returned. Check the specifications of the linear encoder.
- The linear encoder is not adjusted properly.
  If the linear encoder is not adjusted properly, the output signal level from the linear encoder will drop and the correct number of pulses will not be counted. Check the adjustment of the linear encoder. Contact the manufacturer of the linear encoder for details.
- There is a mistake in the wiring between the linear encoder and the Serial Converter Unit.
  If the wiring is not correct, the correct number of pulses will not be counted. Correct the wiring.

4. Manually move the Moving Coil in the direction of the cable and check the value of the feedback pulse counter in the Operation Pane to confirm that it is counting up.

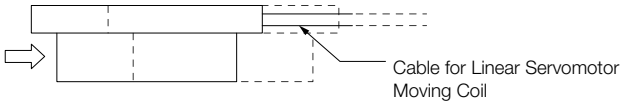

Manually move the Moving Coil in the direction of the cable.

5. If the feedback pulse counter counts up, set a phase-A lead as a phase sequence of U, V, and W (Pn080 = n.□□0□).
   If the feedback pulse counter counts down, set a phase-B lead as a phase sequence of U, V, and W (Pn080 = n.□□1□).
6. Turn the power supply to the SERVOPACK OFF and ON again.
7. If necessary, return Pn000 = n.□□□X (Direction Selection) to its original setting.

This concludes the procedure to set the phase sequence of the Linear Servomotor.

5.9 Polarity Sensor Setting

The polarity sensor detects the polarity of the Servomotor. You must set a parameter to specify whether the Linear Servomotor that is connected to the SERVOPACK has a polarity sensor. Specify whether there is a polarity sensor in Pn080 = n.□□□X (Polarity Sensor Selection).

If the Linear Servomotor has a polarity sensor, set Pn080 to n.□□□0 (Use polarity sensor) (default setting).

If the Linear Servomotor does not have a polarity sensor, set Pn080 to n.□□□1 (Do not use polarity sensor). Turn the power supply OFF and ON again to enable the new setting.

Parameter		Meaning	When Enabled	Classification
Pn080	n.□□□0 (default setting)	Use polarity sensor.	After restart	Setup
	n.□□□1	Do not use polarity sensor.		

Information

If you set Pn080 to n.□□□0 (Use polarity sensor) and the Linear Servomotor that is connected to the SERVOPACK does not have a polarity sensor, an A.C21 alarm (Polarity Sensor Error) will occur when you turn the power supply OFF and ON again.

5.10 Polarity Detection

If you use a Linear Servomotor that does not have a polarity sensor, then you must detect the polarity.

Detecting the polarity means that the position of the electrical angle phase on the electrical angle coordinates of the Servomotor is detected. The SERVOPACK cannot control the Servomotor correctly unless it accurately knows the position of the electrical angle coordinate of the Servomotor.

The execution timing and execution method for polarity detection depend on the encoder specification as described in the following table.

Encoder Specification	Polarity Detection Execution Timing	Polarity Detection Execution Method
Incremental encoder	Each time the control power supply to the SERVOPACK is turned ON (Even after you execute polarity detection, the position of the polarity will be lost the next time the control power supply to the SERVOPACK is turned OFF.)	• Use the SV_ON (Servo ON) command. • Use the polarity detection function of the SigmaWin+. • Execute the Fn080 (Polarity Detection) utility function from the Digital Operator.
Absolute encoder	Only for initial setup, or after the SERVOPACK, linear encoder, or Servomotor has been replaced (The results of polarity detection is stored in the absolute encoder, so the polarity position is not lost when the control power supply is turned OFF.)	• Use the polarity detection function of the SigmaWin+. • Execute the Fn080 (Polarity Detection) utility function from the Digital Operator. • Use Pn587 (Absolute Linear Encoder Polarity Detection Selection).

Information If you use a Linear Servomotor that does not have a polarity sensor, you will not be able to turn ON the servo until polarity detection has been completed.

5.10.1 Restrictions

Assumed Conditions

The Servomotor will move when you execute polarity detection. The following conditions must be met before you start.

- It must be OK to move the Moving Coil about 10 mm.
  (If polarity detection fails, the Moving Coil may move approximately 5 cm. The amount of movement depends on conditions.)
- The linear encoder pitch must be 100 μm or less. (We recommend a pitch of 40 μm or less for an incremental encoder.)
- As much as possible, the motor must not be subjected to an imbalanced external force. (We recommend 5% or less of the rated force.)
- The mass ratio must be 50x or less.
- The axis must be horizontal.
- There must be friction equivalent to a few percent of the rated force applied to the guides. (Air sliders cannot be used.)

Preparations

Always check the following before you execute polarity detection.

- Not using a polarity sensor must be specified (Pn080 = n.□□□1).
- The servo must be OFF.
- The main circuit power supply must be ON.
- There must be no hard wire base block (HWBB).
- There must be no alarms except for an A.C22 alarm (Phase Information Disagreement).
- The parameters must not be write prohibited. (This item applies only when using the SigmaWin+ or Digital Operator.)
- The test without a motor function must be disabled (Pn00C = n.□□□0).
- There must be no overtravel.
- If the motor parameters have been written or the origin of the absolute linear encoder has been set, the power supply to the SERVOPACK must be turned OFF and ON again after completion of the writing or setting operation.

Important

1. Power is supplied to the Servomotor during polarity detection. Be careful not to get an electric shock. Also, the Moving Coil of the Linear Servomotor may greatly move during detection. Do not approach the moving parts of the Servomotor.
2. Polarity detection is affected by many factors.
   For example, polarity detection may fail if the mass ratio or friction is too large or the cable tension is too strong.

5.10.2 Using the SV_ON (Servo ON) Command to Perform Polarity Detection

You can use the SV_ON (Servo ON) command to perform polarity detection only with an incremental linear encoder.

Polarity detection will be performed when you turn the control power supply to the SERVOPACK OFF and then ON again, and then send the SV_ON (Servo ON) command. As soon as polarity detection is completed, the /S-RDY (Servo Ready) signal will turn ON.

Polarity detection will start simultaneously with execution of the SV_ON (Servo ON) command. As soon as polarity detection is completed, the /S-RDY will turn ON and the servo will remain ON.

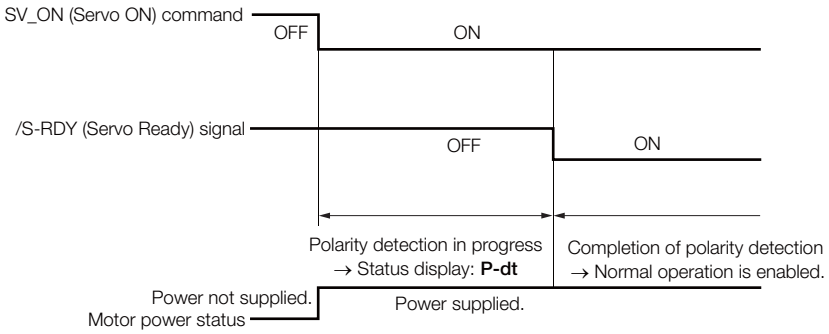

5.10.3 Using a Tool Function to Perform Polarity Detection

Applicable Tools

The following table lists the tools that you can use to perform polarity detection and the applicable tool functions.

Tool	Function	Reference
Digital Operator	Fn080	Σ-7-Series Digital Operator Operating Manual (Manual No.: SIEP S800001 33)
SigmaWin+	***Encoder Setting - Polarity Detection***	*Operating Procedure* on page 5-28

Operating Procedure

Use the following procedure to perform polarity detection.

1. Click the Servo Drive Button in the workspace of the Main Window of the SigmaWin+.

2. Select **Polarity Detection** in the Menu Dialog Box.
   The Polarity Detection Dialog Box will be displayed.

3. Click the **Continue** Button.

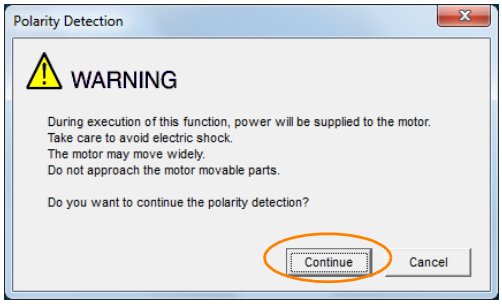

   Click the **Cancel** Button to cancel polarity detection. The Main Window will return.

4. Click the **Start** Button.
   Polarity detection will be executed.

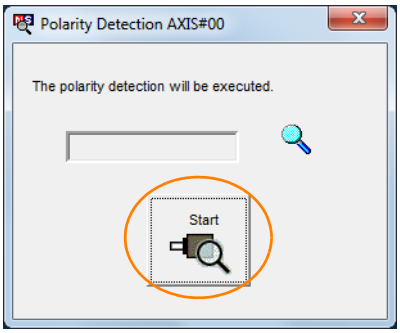

This concludes the polarity detection procedure.

5.11 Overtravel and Related Settings

Overtravel is a function of the SERVOPACK that forces the Servomotor to stop in response to a signal input from a limit switch that is activated when a moving part of the machine exceeds the safe range of movement.

The overtravel signals include the P-OT (Forward Drive Prohibit) and the N-OT (Reverse Drive Prohibit) signals.

You use the P-OT and N-OT signals to stop the machine by installing limit switches at the positions where you want to stop the machine that is operated by the Servomotor.

A SERVOPACK wiring example is provided below.

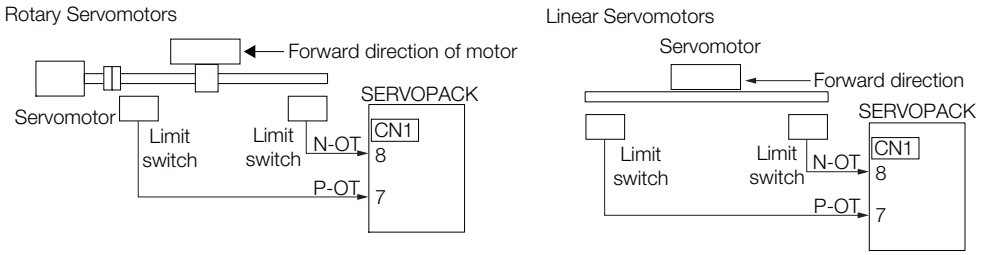

Using the overtravel function is not necessary for rotating applications such as rotary tables and conveyors. No wiring for overtravel input signals is required.

This section describes the parameters settings related to overtravel.

⚠ CAUTION

- To prevent accidents that may result from contact faults or disconnections, use normally closed limit switches.
  Do not change the default settings of the polarity of the overtravel signals (P-OT and N-OT).
- If you use a Servomotor for a vertical axis, the /BK (Brake) signal will remain ON (i.e., the brake will be released) when overtravel occurs. This may result in the workpiece falling when overtravel occurs. To prevent the workpiece from falling, set Pn001 to n.□□1□ to place the Servomotor in a zero-clamped state when it stops.
- A base block state is entered after stopping for overtravel. This may cause the Servomotor to be pushed back by an external force on the load shaft. To prevent the Servomotor from being pushed back, set Pn001 to n.□□1□ to place the Servomotor in a zero-clamped state when it stops.

5.11.1 Overtravel Signals

The overtravel signals include the P-OT (Forward Drive Prohibit) and the N-OT (Reverse Drive Prohibit) signals.

Type	Signal	Connector Pin No.	Signal Status	Meaning
Input	P-OT	CN1-7	ON	Forward drive is enabled (actual operation).
			OFF	Forward drive is prohibited (forward overtravel).
	N-OT	CN1-8	ON	Reverse drive is enabled (actual operation).
			OFF	Reverse drive is prohibited (reverse overtravel).

You can operate the Servomotor in the opposite direction during overtravel by inputting a reference.

5.11.2 Setting to Enable/Disable Overtravel

You can use Pn50A = n.X□□□ (P-OT (Forward Drive Prohibit) Signal Allocation) and Pn50B = n.□□□X (N-OT (Reverse Drive Prohibit) Signal Allocation) to enable and disable the overtravel function.

You do not need to wire the overtravel input signals if you are not going to use the overtravel function.

Parameter		Meaning	When Enabled	Classification
Pn50A	n.1□□□ (default setting)	The forward overtravel function is enabled and the P-OT (Forward Drive Prohibit) signal is input from CN1-7.	After restart	Setup
	n.8□□□	The reverse overtravel function is disabled. Forward drive is always enabled.		
Pn50B	n.□□□2 (default setting)	The reverse overtravel function is enabled and the N-OT (Reverse Drive Prohibit) signal is input from CN1-8.		
	n.□□□8	The reverse overtravel function is disabled. Reverse drive is always enabled.		

You can allocate the P-OT and N-OT signals to other connector pins. Refer to the following section for details.

☞ *6.1.1 Input Signal Allocations* on page 6-4

5.11.3 Motor Stopping Method for Overtravel

You can set the stopping method of the Servomotor when overtravel occurs in Pn001 = n.□□XX (Servo OFF or Alarm Group 1 Stopping Method and Overtravel Stopping Method).

Parameter		Motor Stopping Method*	Status after Stopping	When Enabled	Classification
Pn001	n.□□00 (default setting)	Dynamic brake	Coasting	After restart	Setup
	n.□□01				
	n.□□02	Coasting			
	n.□□1□	Deceleration according to setting of Pn406	Zero clamp		
	n.□□2□		Coasting		
	n.□□3□	Deceleration according to setting of Pn30A	Zero clamp		
	n.□□4□		Coasting		

* You cannot decelerate a Servomotor to a stop during torque control. For torque control, the Servomotor will be stopped with the dynamic braking or coast to a stop (according to the setting of Pn001 = n.□□□X (Servo OFF or Alarm Group 1 Stopping Method)), and then the Servomotor will enter a coasting state.

Refer to the following section for information on stopping methods other than those for overtravel.

☞ *5.13.1 Stopping Method for Servo OFF* on page 5-40

Stopping the Servomotor by Setting Emergency Stop Torque

To stop the Servomotor by setting emergency stop torque, set Pn406 (Emergency Stop Torque).

If Pn001 = n.□□X□ is set to 1 or 2, the Servomotor will be decelerated to a stop using the torque set in Pn406 as the maximum torque.

The default setting is 800%. This setting is large enough to allow you to operate the Servomotor at the maximum torque. However, the maximum emergency stop torque that you can actually use is the maximum torque of the Servomotor.

Pn406	Emergency Stop Torque			Speed Position	
	Setting Range	Setting Unit	Default Setting	When Enabled	Classification
	0 to 800	1%*	800	Immediately	Setup

* Set a percentage of the motor rated torque.

Stopping the Servomotor by Setting the Deceleration Time

To specify the Servomotor deceleration time and use it to stop the Servomotor, set Pn30A (Deceleration Time for Servo OFF and Forced Stops).

Pn30A	Deceleration Time for Servo OFF and Forced Stops			Speed Position	
	Setting Range	Setting Unit	Default Setting	When Enabled	Classification
	0 to 10,000	1 ms	0	Immediately	Setup

If you set Pn30A to 0, the Servomotor will be stopped with a zero speed.

The deceleration time that you set in Pn30A is the time to decelerate the Servomotor from the maximum motor speed.

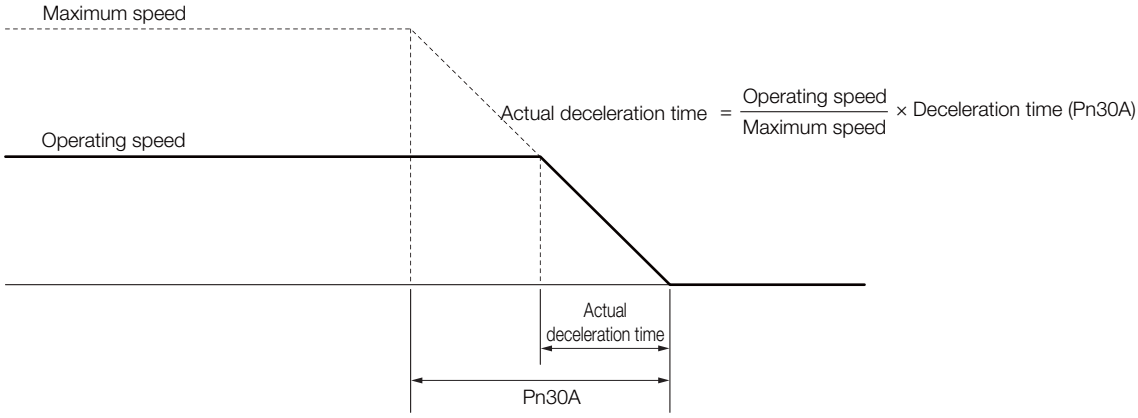

5.11.4 Overtravel Warnings

You can set the system to detect an A.9A0 warning (Overtravel) if overtravel occurs while the servo is ON. This allows the SERVOPACK to notify the host controller with a warning even when the overtravel signal is input only momentarily. An alarm occurs only if overtravel occurs while the servo is ON. An overtravel warning will not be detected when the servo is OFF, even if overtravel occurs.

Important

1. The occurrence of an A.9A0 warning will not stop the motor or have any affect on host controller motion operations. The next step (e.g., the next motion or command) can be executed even if an overtravel warning exists.
   However, depending on the processing specifications and programming for warnings in the host controller, operation may be affected when an overtravel warning occurs (e.g., motion may stop or not stop). Confirm the specifications and programming in the host controller.
2. When overtravel occurs, the SERVOPACK will perform stop processing for overtravel. Therefore, when an A.9A0 warning occurs, the Servomotor may not reach the target position specified by the host controller. Check the feedback position to make sure that the axis is stopped at a safe position.

The following parameter is set for this function.

Parameter		Meaning	When Enabled	Classification
Pn00D	n.0□□□ (default setting)	Do not detect overtravel warnings.	Immediately	Setup
	n.1□□□	Detect overtravel warnings.		

A timing chart for warning detection is provided below.

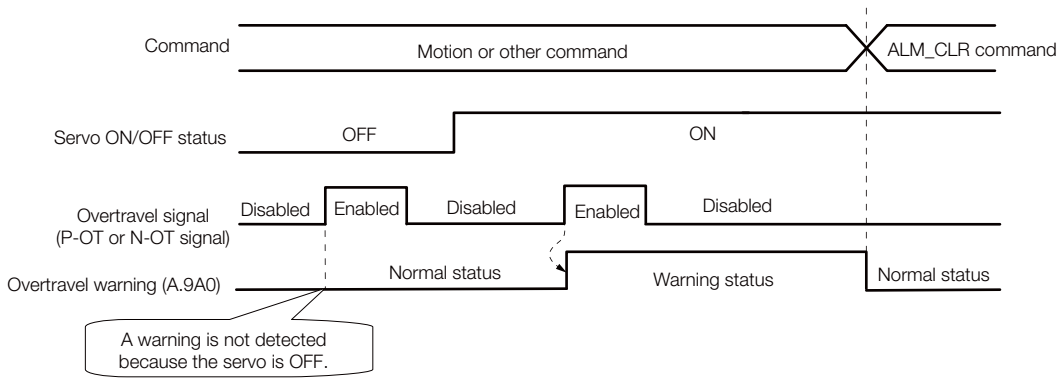

Information

1. Warnings are detected for overtravel in the same direction as the reference.
2. Warnings are not detected for overtravel in the opposite direction from the reference.
   Example: A warning will not be output for a forward reference even if the N-OT signal turns ON.
3. A warning can be detected in either the forward or reverse direction if there is no reference.
4. A warning will not be detected when the servo is turned ON even if overtravel status exists.
5. You can use the ALM_CLR (Clear Alarms and Warnings) command to clear the warning regardless of the servo ON/OFF status and overtravel signal status.
6. If you clear the warning with the ALM_CLR (Clear Alarms and Warnings) command during overtravel status, a warning will not be detected again until the overtravel status is left.
7. An overtravel warning will be detected even when the software limit has been detected.

5.12 Holding Brake

A holding brake is used to hold the position of the moving part of the machine when the SERVOPACK is turned OFF so that moving part does not move due to gravity or an external force. You can use the brake that is built into a Servomotor with a Brake, or you can provide one on the machine.

The holding brake is used in the following cases.

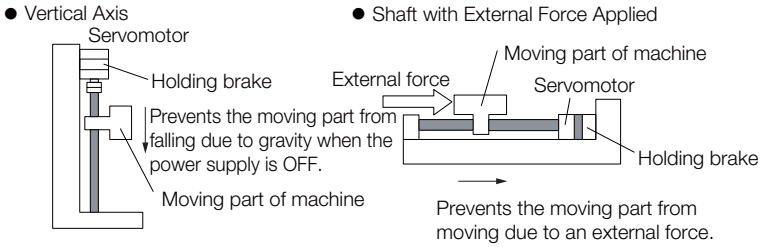

Important

The brake built into a Servomotor with a Brake is a de-energization brake. It is used only to hold the Servomotor and cannot be used for braking. Use the holding brake only to hold a Servomotor that is already stopped.

5.12.1 Brake Operating Sequence

You must consider the brake release delay time and the brake operation delay time to determine the brake operation timing, as described below.

Term

Brake Release Delay Time
The time from when the /BK (Brake) signal is turned ON until the brake is actually released.

Brake Operation Delay Time
The time from when the /BK (Brake) signal is turned OFF until the brake actually operates.

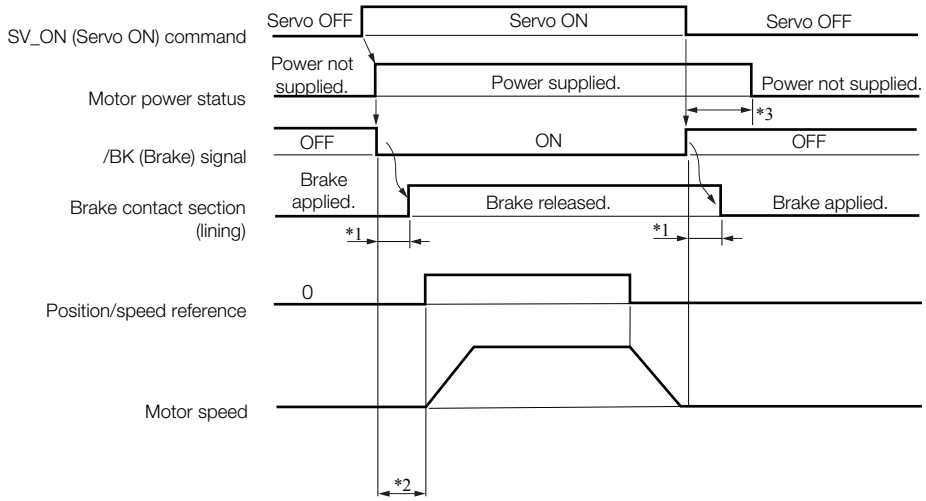

*1. Rotary Servomotors: The brake delay times for Servomotors with Holding Brakes are given in the following table. The operation delay times in the following table are examples for when the power supply is switched on the DC side. You must evaluate the actual brake delay times on the actual equipment before using the application.

Model	Voltage	Brake Release Delay Time [ms]	Brake Operation Delay Time [ms]
SGM7M-A1 to -A3	24 VDC	60	100
SGM7J-A5 to -04			
SGM7J-06 and -08		80	
SGM7A-A5 to -04		60	
SGM7A-06 to -10		80	
SGM7A-15 to -25		170	80
SGM7A-30 to -50		100	
SGM7P-01		20	100
SGM7P-02 and -04		40	
SGM7P-08 and -15		20	
SGM7G-03 to -20		100	80
SGM7G-30 to -44		170	100
SGM7G-55 to -1A			80
SGM7G-1E		250	

Linear Servomotors: The brake delay times depend on the brake that you use. Set the parameters related to /BK signal output timing according to the delay times for the brake that you will actually use.

*2. Before you output a reference from the host controller to the SERVOPACK, wait for at least 50 ms plus the brake release delay time after you send the SV_ON command.

*3. Use the following parameters to set the timing of when the brake will operate and when the servo will be turned OFF.
- Rotary Servomotors: Pn506 (Brake Reference-Servo OFF Delay Time), Pn507 (Brake Reference Output Speed Level), and Pn508 (Servo OFF-Brake Reference Waiting Time)
- Linear Servomotors: Pn506 (Brake Reference-Servo OFF Delay Time), Pn508 (Servo OFF-Brake Reference Waiting Time), and Pn583 (Brake Reference Output Speed Level)

Connection Examples

Refer to the following section for information on brake wiring.

☞ *4.4.4 Wiring the SERVOPACK to the Holding Brake* on page 4-33

5.12.2 /BK (Brake) Signal

The following settings are for the output signal that controls the brake. You can change the connector pin that is allocated. For details, refer to *Allocating the /BK (Brake) Signal.*
The /BK signal is turned OFF (to operate the brake) when the servo is turned OFF or when an alarm is detected. You can adjust the timing of brake operation (i.e., the timing of turning OFF the /BK signal) with the servo OFF delay time (Pn506).

Type	Signal	Connector Pin No.	Signal Status	Meaning
Output	/BK	CN1-1, CN1-2	ON (closed)	Releases the brake.
			OFF (open)	Activates the brake.

Information The /BK signal will remain ON during overtravel. The brake will not be applied.

Allocating the /BK (Brake) Signal

Set the allocation for the /BK signal in Pn50F = n.□X□□ (/BK (Brake Output) Signal Allocation).

Parameter		Connector Pin No.		Meaning	When Enabled	Classification
		+ Pin	- Pin			
Pn50F	n.□0□□	–	–	The /BK signal is not used.	After restart	Setup
	n.□1□□ (default setting)	CN1-1	CN1-2	The /BK signal is output from CN1-1 and CN1-2.		
	n.□2□□	CN1-23	CN1-24	The /BK signal is output from CN1-23 and CN1-24.		
	n.□3□□	CN1-25	CN1-26	The /BK signal is output from CN1-25 and CN1-26.		

Important

If you allocate more than one signal to the same output connector pin, a logical OR of the signals is output. Allocate the /BK signal to its own output connector pin, i.e., do not use the same output terminal for another signal.
For example, never allocate the /TGON (Rotation Detection) signal and /BK signal to the same output connector pin. If you did so, the /TGON signal would be turned ON by the falling speed on a vertical axis, and the brake would not operate.

5.12.3 Output Timing of /BK (Brake) Signal When the Servomotor Is Stopped

When the Servomotor is stopped, the /BK signal turns OFF as soon as the SV_OFF (Servo OFF) command is received. Use the servo OFF delay time (Pn506) to change the timing to turn OFF power supply to the motor after the SV_OFF command is input.

Pn506	Brake Reference-Servo OFF Delay Time			Speed Position Torque	
	Setting Range	Setting Unit	Default Setting	When Enabled	Classification
	0 to 50	10 ms	0	Immediately	Setup

- When the Servomotor is used to control a vertical axis, the machine moving part may move slightly due to gravity or an external force. You can eliminate this slight motion by setting the servo OFF delay time (Pn506) so that power supply to the motor is stopped after the brake is applied.
- This parameter sets the timing of stopping power supply to the Servomotor while the Servomotor is stopped.

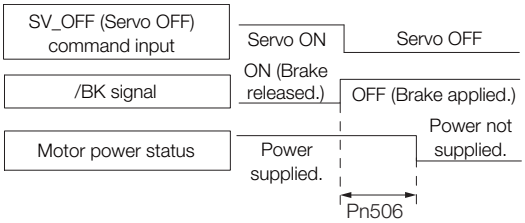

Important

Power supply to the Servomotor will be stopped immediately when an alarm occurs, regardless of the setting of this parameter. The machine moving part may move due to gravity or an external force before the brake is applied.

5.12.4 Output Timing of /BK (Brake) Signal When the Servomotor Is Operating

If an alarm occurs while the Servomotor is operating, the Servomotor will start stopping and the /BK signal will be turned OFF. You can adjust the timing of /BK signal output by setting the brake reference output speed level (Rotary Servomotors: Pn507, Linear Servomotors: Pn583) and the servo OFF-brake reference waiting time (Pn508).

Note: If zero-speed stopping is set as the stopping method for alarms, the setting of Pn506 (Brake Reference-Servo OFF Delay Time) is used after the motor stops.

- Rotary Servomotors

Pn507	Brake Reference Output Speed Level			Speed Position Torque	
	Setting Range	Setting Unit	Default Setting	When Enabled	Classification
	0 to 10,000	1 min^{-1}	100	Immediately	Setup
Pn508	Servo OFF-Brake Reference Waiting Time			Speed Position Torque	
	Setting Range	Setting Unit	Default Setting	When Enabled	Classification
	10 to 100	10 ms	50	Immediately	Setup

- Linear Servomotors

Pn583	Brake Reference Output Speed Level			Speed Position Force	
	Setting Range	Setting Unit	Default Setting	When Enabled	Classification
	0 to 10,000	1 mm/s	10	Immediately	Setup
Pn508	Servo OFF-Brake Reference Waiting Time			Speed Position Force	
	Setting Range	Setting Unit	Default Setting	When Enabled	Classification
	10 to 100	10 ms	50	Immediately	Setup

The brake operates when either of the following conditions is satisfied:

- When the Motor Speed Goes below the Level Set in Pn507 for a Rotary Servomotor or in Pn583 for a Linear Servomotor after the Power Supply to the Motor Is Stopped

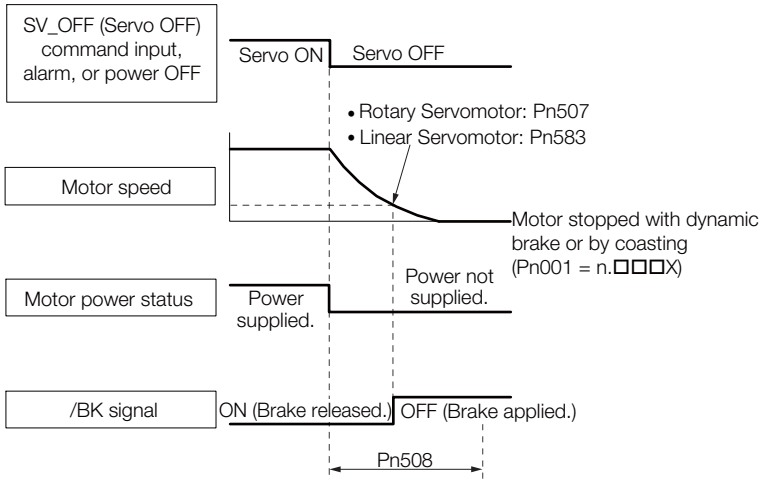

- When the Time Set In Pn508 Elapses after the Power Supply to the Motor Is Stopped

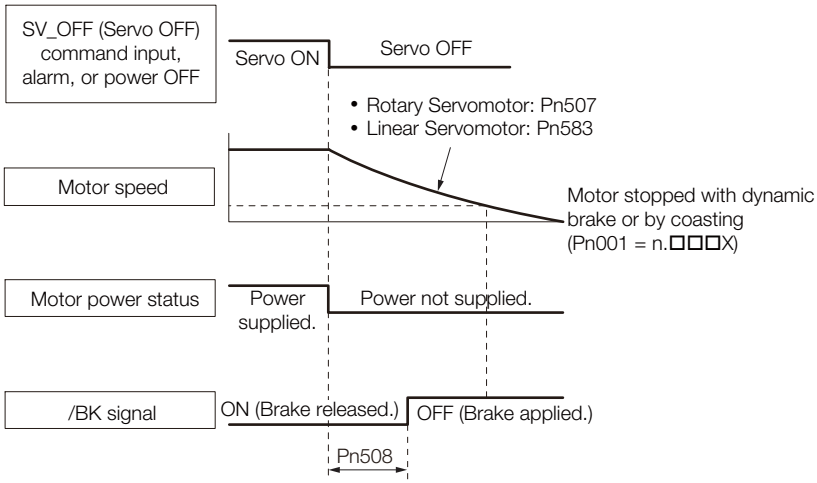

Important

The Servomotor will be limited to its maximum speed even if the brake reference output speed level (Rotary Servomotor: Pn507, Linear Servomotor: Pn583) is higher than the maximum speed.

5.13 Motor Stopping Methods for Servo OFF and Alarms

You can use the following methods to stop the Servomotor when the servo is turned OFF or an alarm occurs.

There are the following four stopping methods.

Motor Stopping Method	Meaning
Stopping by Applying the Dynamic Brake	The electric circuits are internally connected to stop the Servomotor quickly.
Coasting to a Stop	The motor stops naturally due to friction during operation.
Zero-speed Stopping	The speed reference is set to 0 to stop the Servomotor quickly.
Decelerating to a Stop	Emergency stop torque is used to decelerate the motor to a stop.

There are the following three conditions after stopping.

Status after Stopping	Meaning
Dynamic Brake Applied	The electric circuits are internally connected to hold the Servomotor.
Coasting	The SERVOPACK does not control the Servomotor. (The machine will move in response to a force from the load.)
Zero Clamping	A position loop is created and the Servomotor remains stopped at a position reference of 0. (The current stop position is held.)

Important

- The dynamic brake is used for emergency stops. The dynamic brake circuit will operate frequently if the power supply is turned ON and OFF or the servo is turned ON and OFF while a reference input is applied to start and stop the Servomotor. This may result in deterioration of the internal elements in the SERVOPACK. Use speed input references or position references to start and stop the Servomotor.
- If you turn OFF the main circuit power supply or control power supply during operation before you turn OFF the servo, the Servomotor stopping method depends on the SERVOPACK model as shown in the following table.

Condition	Servomotor Stopping Method	
	SGD7S-R70A, -1R6A, -2R8A, -3R8A, -5R5A, -7R6A, -120A, -180A, -200A, -R70F, -R90F, -2R1F, or -2R8F	SGD7S-330A, -470A, -550A, -590A, or -780A
Main circuit power supply turned OFF before turning OFF the servo	Stopping with dynamic brake	
Control power supply turned OFF before turning OFF the servo	Stopping with dynamic brake	Coasting to a stop

- If the Servomotor must be stopped by coasting rather than with the dynamic brake when the main circuit power supply or the control power supply is turned OFF before the servo is turned OFF, use a SERVOPACK with the Dynamic Brake Hardware Option.
- To minimize the coasting distance of the Servomotor to come to a stop when an alarm occurs, zero-speed stopping is the default method for alarms to which it is applicable. However, depending on the application, stopping with the dynamic brake may be more suitable than zero-speed stopping.
  For example, when coupling two shafts (twin-drive operation), machine damage may occur if a zero-speed stopping alarm occurs for one of the coupled shafts and the other shaft stops with a dynamic brake. In such cases, change the stopping method to the dynamic brake.

5.13.1 Stopping Method for Servo OFF

Set the stopping method for when the servo is turned OFF in Pn001 = n.□□□X (Servo OFF or Alarm Group 1 Stopping Method).

Parameter		Servomotor Stopping Method	Status after Servomotor Stops	When Enabled	Classification
Pn001	n.□□□0 (default setting)	Dynamic brake*	Dynamic brake*	After restart	Setup
	n.□□□1		Coasting		
	n.□□□2	Coasting	Coasting		

* The Servomotor will coast to a stop when the SERVOPACK is not equipped with a built-in Dynamic Brake Resistor or an External Dynamic Brake Resistor is not connected.

Note: If Pn001 is set to n.□□□0 (Stop the motor by applying the dynamic brake) and the Servomotor is stopped or operates at a low speed, braking force may not be generated, just like it is not generated for coasting to a stop.

5.13.2 Servomotor Stopping Method for Alarms

There are two types of alarms, group 1 (Gr. 1) alarms and group 2 (Gr. 2) alarms. A different parameter is used to set the stopping method for alarms for each alarm type.

Refer to the following section to see which alarms are in group 1 and which are in group 2.

☞ *12.2.1 List of Alarms* on page 12-5

Motor Stopping Method for Group 1 Alarms

When a group 1 alarm occurs, the Servomotor will stop according to the setting of Pn001 = n.□□□X. The default setting is to stop by applying the dynamic brake.

Refer to the following section for details.

☞ *5.13.1 Stopping Method for Servo OFF* on page 5-40

Motor Stopping Method for Group 2 Alarms

When a group 2 alarm occurs, the Servomotor will stop according to the settings of the following three parameters. The default setting is for zero clamping.

- Pn001 = n.□□□X (Servo OFF or Alarm Group 1 Stopping Method)
- Pn00A = n.□□□X (Motor Stopping Method for Group 2 Alarms)
- Pn00B = n.□□X□ (Motor Stopping Method for Group 2 Alarms)

However, during torque control, the group 1 stopping method is always used.
If you set Pn00B to n.□□1□ (Apply dynamic brake or coast Servomotor to a stop), you can use the same stopping method as group 1. If you are coordinating a number of Servomotors, you can use this stopping method to prevent machine damage that may result because of differences in the stopping method.

The following table shows the combinations of the parameter settings and the resulting stopping methods.

Parameter			Servomotor Stopping Method	Status after Servomotor Stops	When Enabled	Classification
Pn00B	Pn00A	Pn001				
n.□□0□ (default setting)	–	n.□□□0 (default setting)	Zero-speed stopping	Dynamic brake	After restart	Setup
		n.□□□1		Coasting		
		n.□□□2				
n.□□1□	–	n.□□□0 (default setting)	Dynamic brake	Dynamic brake		
		n.□□□1		Coasting		
		n.□□□2	Coasting			
n.□□2□	n.□□□0	n.□□□0 (default setting)	Dynamic brake	Dynamic brake		
		n.□□□1		Coasting		
		n.□□□2	Coasting			
	n.□□□1 (default setting)	n.□□□0 (default setting)	Motor is decelerated using the torque set in Pn406 as the maximum torque.	Dynamic brake		
		n.□□□1		Coasting		
		n.□□□2				
	n.□□□2	n.□□□0 (default setting)		Coasting		
		n.□□□1				
		n.□□□2				
	n.□□□3	n.□□□0 (default setting)	Motor is decelerated according to setting of Pn30A.	Dynamic brake		
		n.□□□1		Coasting		
		n.□□□2				
	n.□□□4	n.□□□0 (default setting)		Coasting		
		n.□□□1				
		n.□□□2				

Note: 1. The setting of Pn00A is ignored if Pn00B is set to n.□□0□ or n.□□1□.
2. The setting of Pn00A = n.□□□X is enabled for position control and speed control. During torque control, the setting of Pn00A = n.□□□X will be ignored and only the setting of Pn001 = n.□□□X will be used.
3. Refer to the following section for details on Pn406 (Emergency Stop Torque).
☞ *Stopping the Servomotor by Setting Emergency Stop Torque* on page 5-31
4. Refer to the following section for details on Pn30A (Deceleration Time for Servo OFF and Forced Stops).
☞ *Stopping the Servomotor by Setting the Deceleration Time* on page 5-31

5.14 Motor Overload Detection Level

The motor overload detection level is the threshold used to detect overload alarms and overload warnings when the Servomotor is subjected to a continuous load that exceeds the Servomotor ratings.

It is designed to prevent Servomotor overheating.

You can change the detection timing for A.910 warnings (Overload) and A.720 alarms (Continuous Overload). You cannot change the detection level for A.710 alarms (Instantaneous Overload).

5.14.1 Detection Timing for Overload Warnings (A.910)

With the default setting for overload warnings, an overload warning is detected in 20% of the time required to detect an overload alarm. You can change the time required to detect an overload warning by changing the setting of the overload warning level (Pn52B). You can increase safety by using overload warning detection as an overload protection function matched to the system.
The following graph shows an example of the detection of overload warnings when the overload warning level (Pn52B) is changed from 20% to 50%. An overload warning is detected in half of the time required to detect an overload alarm.

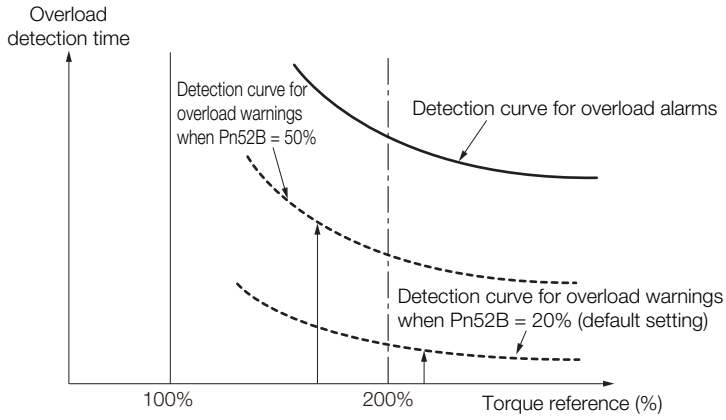

Pn52B	Overload Warning Level			Speed Position Torque	
	Setting Range	Setting Unit	Default Setting	When Enabled	Classification
	1 to 100	1%	20	Immediately	Setup

5.14.2 Detection Timing for Overload Alarms (A.720)

If Servomotor heat dissipation is insufficient (e.g., if the heat sink is too small), you can lower the overload alarm detection level to help prevent overheating.

To reduce the overload alarm detection level, change the setting of Pn52C (Base Current Derating at Motor Overload Detection).

Pn52C	Base Current Derating at Motor Overload Detection			Speed Position Torque	
	Setting Range	Setting Unit	Default Setting	When Enabled	Classification
	10 to 100	1%	100	After restart	Setup

An A.720 alarm (Continuous Overload) can be detected earlier to protect the Servomotor from overloading.

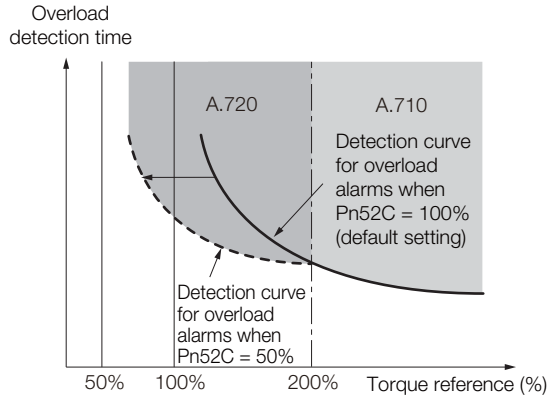

Note: The gray areas in the above graph show where A.710 and A.720 alarms occur.

Refer to the relevant manual given below for a diagram that shows the relationships between the Servomotor heat dissipation conditions (heat sink size, surrounding air temperature, and derating). You can protect the Servomotor from overloads more effectively by setting this derating value in Pn52C.

- Σ-7-Series Rotary Servomotor Product Manual (Manual No.: SIEP S800001 36)
- Σ-7-Series Linear Servomotor Product Manual (Manual No.: SIEP S800001 37)
- Σ-7-Series Direct Drive Servomotor Product Manual (Manual No.: SIEP S800001 38)

5.15 Electronic Gear Settings

The minimum unit of the position data that is used to move a load is called the reference unit. The reference unit is used to give travel amounts, not in pulses, but rather in distances or other physical units (such as μm or °) that are easier to understand.

The electronic gear is used to convert the travel distances that are specified in reference units to pulses, which are required for actual movements.

With the electronic gear, one reference unit is equal to the workpiece travel distance per reference pulse input to the SERVOPACK. In other words, if you use the SERVOPACK's electronic gear, pulses can be read as reference units.

Note: If you set an electronic gear in the host controller, normally set the electronic gear ratio in the SERVOPACK to 1:1.

The difference between using and not using the electronic gear is shown below.

- Rotary Servomotors

In this example, the following machine configuration is used to move the workpiece 10 mm.

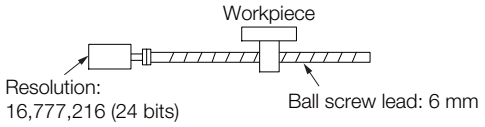

When the Electronic Gear Is Not Used

To move a workpiece 10 mm:
①Calculate the number of revolutions.
The Servomotor will move 6 mm for each revolution, so 10/6 revolutions are required to move 10 mm.
②Calculate the required number of reference pulses.
One revolution is 16,777,216 pulses, therefore 10/6 × 16,777,216 = 27,962,026.66 pulses.
③Input 27,962,027 pulses as the reference.

Calculating the number of reference pulses for each reference is troublesome.

When the Electronic Gear Is Used

If you use reference units to move the workpiece when one reference unit is set to 1 μm, the travel distance is 1 μm per pulse.
To move the workpiece 10 mm (10,000 μm), 10,000 ÷ 1 = 10,000 pulses, so 10,000 pulses would be input.

Calculating the number of reference pulses for each reference is not necessary.

- Linear Servomotors

In this example, the following machine configuration is used to move the load 10 mm. We'll assume that the resolution of the Serial Converter Unit is 256 and that the linear encoder pitch is 20 μm.

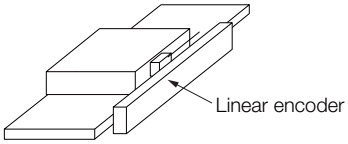

When the Electronic Gear Is Not Used

To move the load 10 mm:
10 × 1000 ÷ 20 × 256 = 128,000 pulses, so 128,000 pulses are input as the reference.

Calculating the number of reference pulses for each reference is troublesome.

When the Electronic Gear Is Used

To use reference units to move the load 10 mm: If we set the reference unit to 1 μm, the travel distance is 1 μm per pulse. To move the load 10 mm (10,000 μm), 10,000/1 = 10,000 pulses, so 10,000 pulses would be input as the reference.

Calculating the number of reference pulses for each reference is not necessary.

5.15.1 Electronic Gear Ratio Settings

Set the electronic gear ratio using Pn20E and Pn210.

Important

The setting range of the electronic gear depends on the setting of Pn040 = n.□□X□ (Encoder Resolution Compatibility Selection).

- Pn040 = n.□□0□ (Use the encoder resolution of the Servomotor.)
  Set the electronic gear ratio within the following range.
  0.001 ≤ Electronic gear ratio (B/A) ≤ 64,000
  If the electronic gear ratio is outside of this range, an A.040 alarm (Parameter Setting Error) will occur.
- Pn040 = n.□□1□ (Use a resolution of 20 bits when connected to an SGM7J, SGM7A, SGM7P, SGM7G, SGM7E, or SGM7F Servomotor.)
  Set the electronic gear ratio within the following range.
  0.001 ≤ Electronic gear ratio (B/A) ≤ 4,000
  If the electronic gear ratio is outside of this range, an A.040 alarm (Parameter Setting Error) will occur.

	Electronic Gear Ratio (Numerator)				Position
Pn20E	Setting Range	Setting Unit	Default Setting	When Enabled	Classification
	1 to 1,073,741,824	1	16	After restart	Setup
	Electronic Gear Ratio (Denominator)				Position
Pn210	Setting Range	Setting Unit	Default Setting	When Enabled	Classification
	1 to 1,073,741,824	1	1	After restart	Setup

Calculating the Settings for the Electronic Gear Ratio

◆ Rotary Servomotors

If the gear ratio between the Servomotor shaft and the load is given as n/m, where n is the number of load rotations for m Servomotor shaft rotations, the settings for the electronic gear ratio can be calculated as follows:

$$\text{Electronic gear ratio } \frac{B}{A} = \frac{Pn20E}{Pn210} = \frac{\text{Encoder resolution}}{\text{Travel distance per load shaft revolution (reference units)}} \times \frac{m}{n}$$

■ Encoder Resolution

You can check the encoder resolution in the Servomotor model number.

SGM7M -□□□□□□□

Code	Specification	Encoder Resolution
3	20-bit multiturn absolute encoder	1,048,576

SGM7J, SGM7A,
SGM7P, SGM7G -□□□□□□□

Code	Specification	Encoder Resolution
6	24-bit batteryless multiturn absolute encoder	16,777,216
7	24-bit multiturn absolute encoder	16,777,216
F	24-bit incremental encoder	16,777,216

SGM7E, SGM7F -□□□□□□□

Code	Specification	Encoder Resolution
7	24-bit multiturn absolute encoder	16,777,216
F	24-bit incremental encoder	16,777,216

SGMCS -□□□□□□□

Code	Specification	Encoder Resolution
3	20-bit single-turn absolute encoder	1,048,576
D	20-bit incremental encoder	1,048,576

SGMCV -□□□□□□□

Code	Specification	Encoder Resolution
E	22-bit single-turn absolute encoder	4,194,304
I	22-bit multiturn absolute encoder	4,194,304

◆ Linear Servomotors

You can calculate the settings for the electronic gear ratio with the following equation:

When Not Using a Serial Converter Unit

Use the following formula if the linear encoder and SERVOPACK are connected directly or if a linear encoder that does not require a Serial Converter Unit is used.

$$\text{Electronic gear ratio } \frac{B}{A} = \frac{Pn20E}{Pn210} = \frac{\text{Travel distance per reference unit (reference units)} \times \text{Linear encoder resolution}}{\text{Linear encoder pitch (the value from the following table)}}$$

When Using a Serial Converter Unit

$$\text{Electronic gear ratio } \frac{B}{A} = \frac{Pn20E}{Pn210} = \frac{\text{Travel distance per reference unit (reference units)} \times \text{Resolution of the Serial Converter Unit}}{\text{Linear encoder pitch (setting of Pn282)}}$$

■ Feedback Resolution of Linear Encoder

The linear encoder pitches and resolutions are given in the following table.
Calculate the electronic gear ratio using the values in the following table.

Type of Linear Encoder	Manufacturer	Linear Encoder Model	Linear Encoder Pitch [μm]*1	Relay Device between SERVOPACK and Linear Encoder	Resolution	Resolution
Incremental	Dr. JOHANNES HEIDENHAIN GmbH	LIDA48□	20	JZDP-H003-□□□-E*2	256	0.078 μm
				JZDP-J003-□□□-E*2	4,096	0.0049 μm
		LIF48□	4	JZDP-H003-□□□-E*2	256	0.016 μm
				JZDP-J003-□□□-E*2	4,096	0.00098 μm
	Renishaw PLC	RGH22B	20	JZDP-H005-□□□-E*2	256	0.078 μm
				JZDP-J005-□□□-E*2	4,096	0.0049 μm
	Magnescale Co., Ltd.	SR75-□□□□□LF*5	80	–	8,192	0.0098 μm
		SR75-□□□□□MF	80	–	1,024	0.078 μm
		SR85-□□□□□LF*5	80	–	8,192	0.0098 μm
		SR85-□□□□□MF	80	–	1,024	0.078 μm
		SL700*5, SL710*5, SL720*5, SL730*5	800	PL101-RY*3	8,192	0.0977 μm
				MJ620-T13*4		
		SQ10	400	MQ10-FLA*4	8,192	0.0488 μm
				MQ10-GLA*4		
Absolute	Dr. JOHANNES HEIDENHAIN GmbH	LIC4100 Series	20.48	EIB3391Y*4	4,096	0.005 μm
		LIC2100 Series	204.8	EIB3391Y*4	4,096	0.05 μm
			409.6	EIB3391Y*4	4,096	0.1 μm
		LC115	40.96	EIB3381Y*4	4,096	0.01 μm
		LC415	40.96	EIB3391Y*4	4,096	0.01 μm
	Mitutoyo Corporation	ST781A/ST781AL	256	–	512	0.5 μm
		ST782A/ST782AL	256	–	512	0.5 μm
		ST783/ST783AL	51.2	–	512	0.1 μm
		ST784/ST784AL	51.2	–	512	0.1 μm
		ST788A/ST788AL	51.2	–	512	0.1 μm
		ST789A/ST789AL	25.6	–	512	0.05 μm
		ST1381	5.12	–	512	0.01 μm
		ST1382	0.512	–	512	0.001 μm
	Renishaw PLC	EL36Y-□□050F□□□	12.8	–	256	0.05 μm
		EL36Y-□□100F□□□	25.6	–	256	0.1 μm
		EL36Y-□□500F□□□	128	–	256	0.5 μm
		RL36Y-□□050□□□□	12.8	–	256	0.05 μm
		RL36Y-□□001□□□□	0.256	–	256	0.001 μm

Continued on next page.

Continued from previous page.

Type of Linear Encoder	Manufacturer	Linear Encoder Model	Linear Encoder Pitch [μm]*1	Relay Device between SERVOPACK and Linear Encoder	Resolution	Resolution
Absolute	Magnescale Co., Ltd.	SR77-□□□□□LF*5	80	–	8,192	0.0098 μm
		SR77-□□□□□MF	80	–	1,024	0.078 μm
		SR87-□□□□□LF*5	80	–	8,192	0.0098 μm
		SR87-□□□□□MF	80	–	1,024	0.078 μm
		SQ47/SQ57-□□□□S□F□□□ SQ47/SQ57-□□□□T□F□□□	20.48	–	4,096	0.005 μm
		SQ47/SQ57-□□□□A□F□□□ SQ47/SQ57-□□□□F□F□□□	40.96	–	4,096	0.01 μm
	Fagor Automation S. Coop.	L2AK208	20	–	256	0.078 μm
		L2AK211	20	–	2,048	0.0098 μm
		LAK209	40	–	512	0.078 μm
		LAK212	40	–	4,096	0.0098 μm
		S2AK208	20	–	256	0.078 μm
		SV2AK208	20	–	256	0.078 μm
		G2AK208	20	–	256	0.078 μm
		S2AK211	20	–	2,048	0.0098 μm
		SV2AK211	20	–	2,048	0.0098 μm
		G2AK211	20	–	2,048	0.0098 μm

*1. These are reference values for setting SERVOPACK parameters. Contact the manufacturer for actual linear encoder scale pitches.
*2. This is the model of the Serial Converter Unit.
*3. This is the model of the Head with Interpolator.
*4. This is the model of the Interpolator.
*5. If you use an encoder pulse output with this linear encoder, the setting range of the encoder output resolution (Pn281) is restricted. Refer to the following section for details on the encoder output resolution (Pn281).
☞ *6.5.2 Setting for the Encoder Divided Pulse Output* on page 6-25

Information

Resolution

You can calculate the resolution that is used inside the SERVOPACK (i.e., the travel distance per feedback pulse) with the following formula.

$$\text{Resolution (travel distance per feedback pulse)} = \frac{\text{Linear encoder pitch}}{\text{Resolution of Serial Converter Unit or linear encoder}}$$

The SERVOPACK uses feedback pulses as the unit to control a Servomotor.

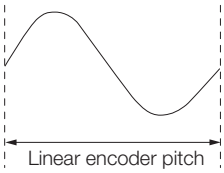

Linear encoder pitch
=Distance for one cycle of the analog voltage feedback signal from the linear encoder

5.15.2 Electronic Gear Ratio Setting Examples

Setting examples are provided in this section.

- Rotary Servomotors

Step	Description	Machine Configuration		
		Ball Screw	Rotary Table	Belt and Pulley
		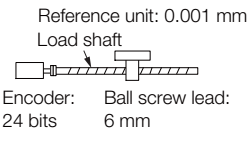	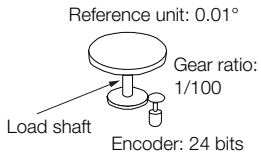	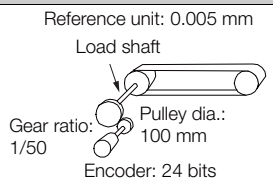
1	Machine Specifications	• Ball screw lead: 6 mm • Gear ratio: 1/1	• Rotation angle per revolution: 360° • Gear ratio: 1/100	• Pulley dia.: 100 mm (Pulley circumference: 314 mm) • Gear ratio: 1/50
2	Encoder Resolution	16,777,216 (24 bits)	16,777,216 (24 bits)	16,777,216 (24 bits)
3	Reference Unit	0.001 mm (1 μm)	0.01°	0.005 mm (5 μm)
4	Travel Distance per Load Shaft Revolution (Reference Units)	6 mm/0.001 mm = 6,000	360°/0.01° = 36,000	314 mm/0.005 mm = 62,800
5	Electronic Gear Ratio	$\frac{B}{A} = \frac{16,777,216}{6,000} \times \frac{1}{1}$	$\frac{B}{A} = \frac{16,777,216}{36,000} \times \frac{100}{1}$	$\frac{B}{A} = \frac{16,777,216}{62,800} \times \frac{50}{1}$
6	Parameters	Pn20E: 16,777,216	Pn20E: 167,772,160	Pn20E: 838,860,800
		Pn210: 6,000	Pn210: 3,600	Pn210: 62,800

- Linear Servomotors

A setting example for a Serial Converter Unit resolution of 256 is given below.

Step	Description	Machine Configuration
		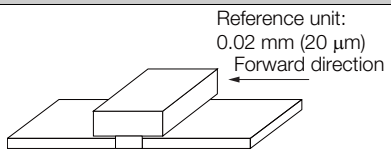
1	Linear encoder pitch	0.02 mm (20 μm)
2	Reference Unit	0.001 mm (1 μm)
3	Electronic Gear Ratio	$\frac{B}{A} = \frac{1\ (\mu m)}{20\ (\mu m)} \times 256$
4	Setting Parameters	Pn20E: 256
		Pn210: 20

5.16 Resetting the Absolute Encoder

In a system that uses an absolute encoder, the multiturn data must be reset at startup. An alarm related to the absolute encoder (A.810 or A.820) will occur when the absolute encoder must be reset, such as when the power supply is turned ON.

When you reset the absolute encoder, the multiturn data is reset and any alarms related to the absolute encoder are cleared.

Reset the absolute encoder in the following cases.

- When an A.810 alarm (Encoder Backup Alarm) occurs
- When an A.820 alarm (Encoder Checksum Alarm) occurs
- When starting the system for the first time
- When you want to reset the multiturn data in the absolute encoder
- When the Servomotor has been replaced

⚠ CAUTION

- The multiturn data will be reset to a value between -2 and +2 rotations when the absolute encoder is reset. The reference position of the machine system will change. Adjust the reference position in the host controller to the position that results from resetting the absolute encoder.
  If the machine is started without adjusting the position in the host controller, unexpected operation may cause personal injury or damage to the machine.

Information

1. The multiturn data will always be zero in the following cases. It is never necessary to reset the absolute encoder in these cases. An alarm related to the absolute encoder (A.810 or A.820) will not occur.
   - When you use a single-turn absolute encoder
   - When the encoder is set to be used as a single-turn absolute encoder (Pn002 = n.□2□□)
2. If a batteryless absolute encoder is used, an A.810 alarm (Encoder Backup Alarm) will occur the first time the power is turned ON. After you reset the absolute encoder, the A.810 alarm will no longer occur.

5.16.1 Precautions on Resetting

- You cannot use the ALM_CLR (Clear Alarm) command from the SERVOPACK to clear the A.810 alarm (Encoder Backup Alarm) or the A.820 alarm (Encoder Checksum Alarm). Always use the operation to reset the absolute encoder to clear these alarms.
- If an A.8□□ alarm (Internal Encoder Monitoring Alarm) occurs, turn OFF the power supply to reset the alarm.

5.16.2 Preparations

Always check the following before you reset an absolute encoder.

- The parameters must not be write prohibited.
- The servo must be OFF.

5.16.3 Applicable Tools

The following table lists the tools that you can use to reset the absolute encoder and the applicable tool functions.

Tool	Function	Reference
Digital Operator	Fn008	Σ-7-Series Digital Operator Operating Manual (Manual No.: SIEP S800001 33)
SigmaWin+	***Encoder Setting – Reset Absolute Encoder***	*5.16.4 Operating Procedure* on page 5-51

Information You can reset the absolute encoder using the MEM_WR (Write Memory) command. Refer to the following manual for information on the MEM_WR (Write Memory) command.
Σ-7-Series MECHATROLINK-III Communications Standard Servo Profile Command Manual (Manual No.: SIEP S800001 31)

5.16.4 Operating Procedure

Use the following procedure to reset the absolute encoder.

1. Confirm that the servo is OFF.
2. Click the Servo Drive Button in the workspace of the Main Window of the SigmaWin+.
3. Select **Absolute Encoder Reset** in the Menu Dialog Box.
   The Absolute Encoder Reset Dialog Box will be displayed.
4. Click the **Continue** Button.

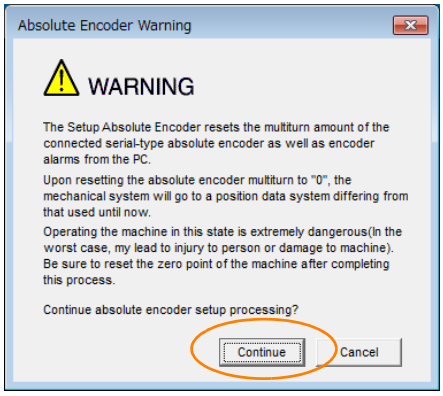

Click the **Cancel** Button to cancel resetting the absolute encoder. The Main Window will return.

5. Click the **Execute setting** Button.

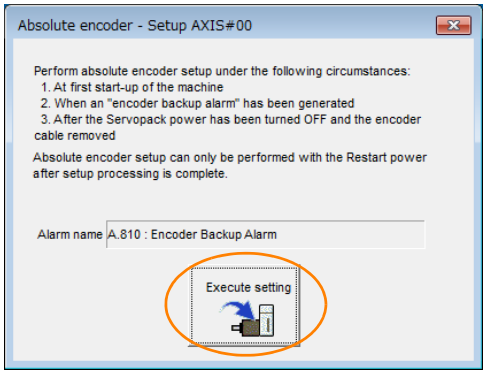

The current alarm code and name will be displayed in the **Alarm name** Box.

6. Click the **Continue** Button.

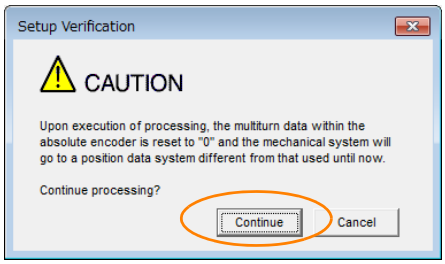

Click the **Cancel** Button to cancel resetting the absolute encoder. The previous dialog box will return.

7. Click the **OK** Button.
The absolute encoder will be reset.

When Resetting Fails
If you attempted to reset the absolute encoder when the servo was ON in the SERVOPACK, the following dialog box will be displayed and processing will be canceled.

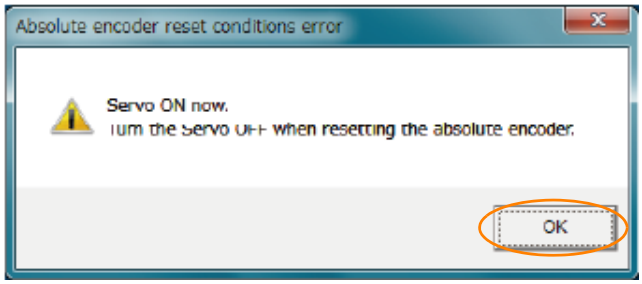

Click the **OK** Button. The Main Window will return. Turn OFF the servo and repeat the procedure from step 1.

When Resetting Is Successful
The following dialog box will be displayed when the absolute encoder has been reset.

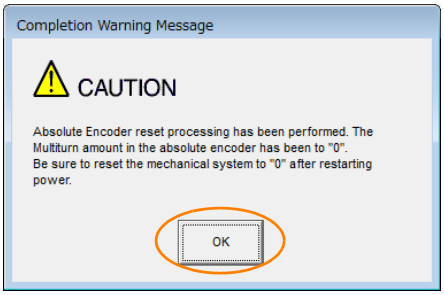

The Main Window will return.

8. To enable the change to the settings, turn the power supply to the SERVOPACK OFF and ON again.

This concludes the procedure to reset the absolute encoder.

5.17 Setting the Origin of the Absolute Encoder

5.17.1 Absolute Encoder Origin Offset

The origin offset of the absolute encoder is a correction that is used to set the origin of the machine coordinate system in addition to the origin of the absolute encoder. Set the offset between the absolute encoder origin and the machine coordinate system origin in Pn808 (Absolute Encoder Origin Offset).

After the SENS_ON (Absolute Data Request) command is received, the position in the machine coordinate system (APOS) is set based on the absolute encoder position data and the setting of Pn808.

Pn808	Absolute Encoder Origin Offset				Position
	Setting Range	Setting Unit	Default Setting	When Enabled	Classification
	-1,073,741,823 to 1,073,741,823	1 reference unit	0	Immediately	Setup

Example If the encoder position (X) is at the origin of the machine coordinate system (0), then Pn808 would be set to -X.

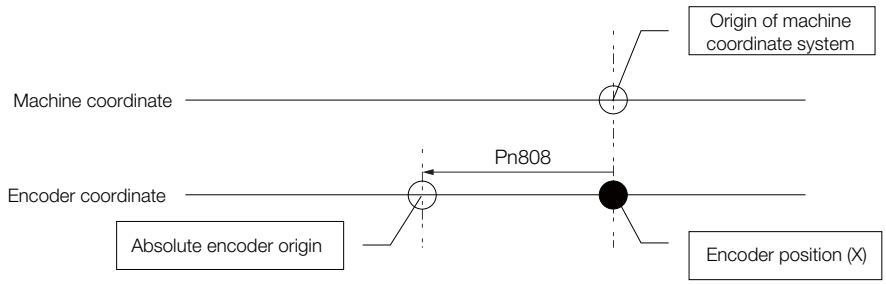

5.17.2 Setting the Origin of the Absolute Linear Encoder

You can set any position as the origin in the following Linear Encoders.

- Mitutoyo Corporation
  ABS ST780A Series or ST1300 Series
  Models: ABS ST78□A/ST78□AL/ST13□□
- Renishaw PLC
  EVOLUTE Series
  Models: EL36Y-□□□□□□□□□
- Renishaw PLC
  RESOLUTE Series
  Models: RL36Y-□□□□□□□□□

Important

1. After you set the origin, the /S-RDY (Servo Ready) signal will become inactive because the system position data was changed. Always turn the SERVOPACK power supply OFF and ON again.
2. After you set the origin, the Servomotor phase data in the SERVOPACK will be discarded. If you are using a Linear Servomotor without a Polarity Sensor, execute polarity detection again to save the Servomotor phase data in the SERVOPACK.

Preparations

Always check the following before you set the origin of an absolute encoder.

- The parameters must not be write prohibited.
- The servo must be OFF.

Applicable Tools

The following table lists the tools that you can use to set the origin of the absolute linear encoder and the applicable tool functions.

Tool	Function	Reference
Digital Operator	Fn020	Σ-7-Series Digital Operator Operating Manual (Manual No.: SIEP S800001 33)
SigmaWin+	***Encoder Setting - Zero Point Position Setting***	*Operating Procedure* on page 5-54

Operating Procedure

Use the following procedure to set the origin of an absolute linear encoder.

1. Click the Servo Drive Button in the workspace of the Main Window of the SigmaWin+.
2. Select **Set Origin** in the Menu Dialog Box.
   The Set Origin Dialog Box will be displayed.
3. Click the **Continue** Button.

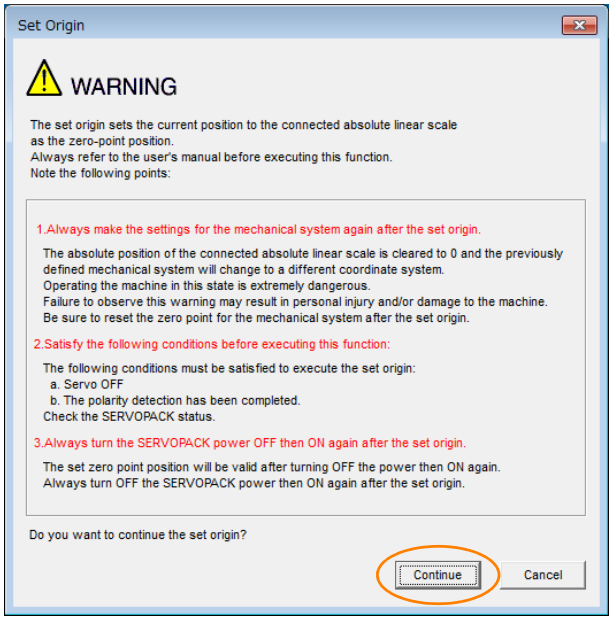

4. Click the **Execute** Button.

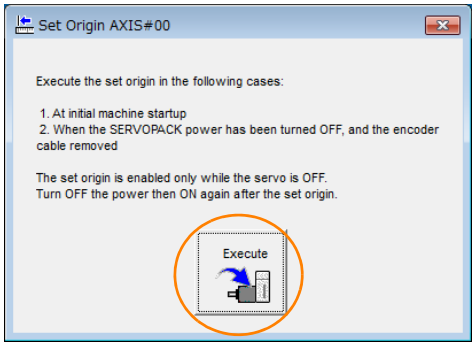

5. Click the **Continue** Button.

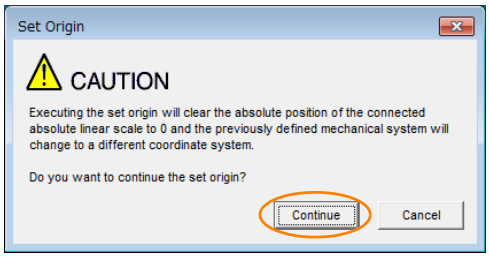

Click the **Cancel** Button to cancel setting the origin of the absolute linear encoder. The previous dialog box will return.

6. Click the **OK** Button.

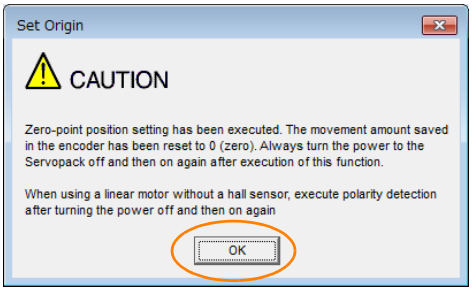

7. Turn the power supply to the SERVOPACK OFF and ON again.

8. If you use a Linear Servomotor that does not have a polarity sensor, perform polarity detection.
Refer to the following section for details on the polarity detection.
☞ *5.10 Polarity Detection* on page 5-26

This concludes the procedure to set the origin of the absolute linear encoder.

5.18 Setting the Regenerative Resistor Capacity

The regenerative resistor consumes regenerative energy that is generated by the Servomotor, e.g., when the Servomotor decelerates.

If an External Regenerative Resistor is connected, you must set Pn600 (Regenerative Resistor Capacity) and Pn603 (Regenerative Resistor Resistance).

Refer to the following manual to select the capacity of a Regenerative Resistor.

Σ-7-Series Peripheral Device Selection Manual (Manual No.: SIEP S800001 32)

WARNING

- **If you connect an External Regenerative Resistor, set Pn600 and Pn603 to suitable values.**
  If a suitable value is not set, A.320 alarms (Regenerative Overload) will not be detected correctly, and the External Regenerative Resistor may be damaged or personal injury or fire may result.
- **When you select an External Regenerative Resistor, make sure that it has a suitable capacity.**
  There is a risk of personal injury or fire.

	Regenerative Resistor Capacity			Speed Position Torque	
Pn600	Setting Range	Setting Unit	Default Setting	When Enabled	Classification
	0 to SERVOPACK's maximum applicable motor capacity	10 W	0	Immediately	Setup
	Regenerative Resistor Resistance			Speed Position Torque	
Pn603	Setting Range	Setting Unit	Default Setting	When Enabled	Classification
	0 to 65,535	10 mΩ	0	Immediately	Setup

Set the regenerative resistor capacity to a value that is consistent with the allowable capacity of the External Regenerative Resistor. The setting depends on the cooling conditions of the External Regenerative Resistor.

- For self-cooling (natural convection cooling): Set the parameter to a maximum 20% of the capacity (W) of the actually installed regenerative resistor.
- For forced-air cooling: Set the parameter to a maximum 50% of the capacity (W) of the actually installed regenerative resistor.

Example For a self-cooling 100-W External Regenerative Resistor, set Pn600 to 2 (×10 W) (100 W × 20% = 20 W).

Note: 1. An A.320 alarm will be displayed if the setting is not suitable.
2. The default setting of 0 specifies that the SERVOPACK's built-in regenerative resistor or Yaskawa's Regenerative Resistor Unit is being used.

Important

1. When an External Regenerative Resistor is used at the normal rated load ratio, the resistor temperature increases to between 200°C and 300°C. Always apply derating. Consult the manufacturer for the resistor's load characteristics.
2. For safety, use an External Regenerative Resistor with a thermoswitch.

5.19 Σ-V Compatible Function and Settings

The Σ-V compatible function allows you to easily replace a Σ-V-Series SERVOPACK with a Σ-7-Series SERVOPACK in an existing servo system.

As long as MECHATROLINK communications are used to communicate with the SERVOPACK from the host controller, the Σ-7-Series SERVOPACK can be used in the same way as the replaced Σ-V-Series SERVOPACK.

> **Important**
> If you replace a Σ-V-Series SERVOPACK with a Σ-7-Series SERVOPACK, you must also replace the previous Servomotor with a Servomotor that is compatible with the Σ-7-Series SERVOPACK. You cannot use a Σ-V-Series Servomotor even if you use the Σ-V compatible function.

5.19.1 Setting the Communications Interface Compatibility Selection

If you use MECHATROLINK communications to communicate with a Σ-7-Series SERVOPACK as if it were a Σ-V-Series SERVOPACK, set Pn040 to n.□□□1.

> **Important**
> 1. When you set Pn040 to n.□□□1, you cannot use the following functions from the SigmaWin+.
> - Mechanical Analysis
> - Moment of Inertia Estimation
> 2. If you set Pn040 to n.□□□1, Pn040 will no longer be displayed on the SigmaWin+, so you will not be able to change the setting. To change the setting of Pn040, use a Digital Operator or initialize the parameters.
> Refer to the following section for information on initializing parameters.
> ☞ *5.1.5 Initializing Parameter Settings* on page 5-11

Parameter		Description	When Enabled	Classification
Pn040	n.□□□0 (default setting)	Perform Σ-7 communications.	After restart	Setup
	n.□□□1	Perform Σ-V communications.		

If Pn040 is set to n.□□□1, the information read by the ID_RD command will be as follows:

- Device code: 02200000h
- Device version: 00FFh
- Minimum transmission cycle: 250000 (250 μs) [unit: 0.01 μs]
- Main device name for a Rotary Servomotor: SGDV-□□□□21A
- Main device name for a Linear Servomotor: SGDV-□□□□25A

Refer to the following manual for IR_RD command details.

📖 Σ-7-Series MECHATROLINK-III Communications Standard Servo Profile Command Manual (Manual No.: SIEP S800001 31)

5.19.2 Setting the Encoder Resolution Compatibility Selection

If an SGM7J, SGM7A, SGM7P, or SGM7G, SGM7E, or SGM7F Servomotor is connected to a Σ-7-Series SERVOPACK and the encoder is set to operate at a resolution of 20 bits, set Pn040 to n.□□1□.

Parameter		Description	When Enabled	Classification
Pn040	n.□□0□ (default setting)	Use the encoder resolution of the Servomotor.	After restart	Setup
	n.□□1□	Use a resolution of 20 bits when connected to an SGM7J, SGM7A, SGM7P, SGM7G, SGM7E, or SGM7F Servomotor.		

Application Functions

6

This chapter describes the application functions that you can set before you start servo system operation. It also describes the setting methods.

6.1 I/O Signal Allocations 6-4

6.1.1 Input Signal Allocations 6-4
6.1.2 Output Signal Allocations 6-5
6.1.3 ALM (Servo Alarm) Signal 6-8
6.1.4 /WARN (Warning) Signal 6-8
6.1.5 /TGON (Rotation Detection) Signal 6-9
6.1.6 /S-RDY (Servo Ready) Signal 6-10
6.1.7 /V-CMP (Speed Coincidence Detection) Signal . . 6-11
6.1.8 /COIN (Positioning Completion) Signal 6-12
6.1.9 /NEAR (Near) Signal 6-13
6.1.10 Speed Limit during Torque Control 6-14

6.2 Operation for Momentary Power Interruptions . . 6-16

6.3 SEMI F47 Function 6-17

6.4 Setting the Motor Maximum Speed 6-19

6.5 Encoder Divided Pulse Output 6-20

6.5.1 Encoder Divided Pulse Output Signals 6-20
6.5.2 Setting for the Encoder Divided Pulse Output . . 6-25

6.6 Software Limits 6-27

6.6.1 Setting to Enable/Disable Software Limits 6-27
6.6.2 Setting the Software Limits 6-27
6.6.3 Software Limit Check for References 6-27

6.7 Selecting Torque Limits 6-28
6.7.1 Internal Torque Limits 6-28
6.7.2 External Torque Limits 6-29
6.7.3 /CLT (Torque Limit Detection) Signal 6-32

6.8 Absolute Encoders 6-33
6.8.1 Connecting an Absolute Encoder 6-34
6.8.2 Structure of the Position Data of the Absolute Encoder 6-34
6.8.3 Output Ports for the Position Data from the Absolute Encoder 6-35
6.8.4 Reading the Position Data from the Absolute Encoder 6-36
6.8.5 Transmission Specifications 6-37
6.8.6 Calculating the Current Position in Machine Coordinates 6-37
6.8.7 Alarm Output from Output Ports for the Position Data from the Absolute Encoder 6-38
6.8.8 Multiturn Limit Setting 6-39
6.8.9 Multiturn Limit Disagreement Alarm (A.CC0) . . . 6-40

6.9 Absolute Linear Encoders 6-43
6.9.1 Connecting an Absolute Linear Encoder 6-43
6.9.2 Structure of the Position Data of the Absolute Linear Encoder 6-43
6.9.3 Output Ports for the Position Data from the Absolute Linear Encoder 6-44
6.9.4 Reading the Position Data from the Absolute Linear Encoder 6-44
6.9.5 Transmission Specifications 6-45
6.9.6 Calculating the Current Position in Machine Coordinates 6-46
6.9.7 Alarm Output from the Output Ports for the Position Data from the Absolute Linear Encoder 6-47

6.10 Software Reset 6-48
6.10.1 Preparations 6-48
6.10.2 Applicable Tools 6-48
6.10.3 Operating Procedure 6-48

6.11 Initializing the Vibration Detection Level . . 6-51
6.11.1 Preparations 6-51
6.11.2 Applicable Tools 6-52
6.11.3 Operating Procedure 6-52
6.11.4 Related Parameters 6-54

6.12 Adjusting the Motor Current Detection Signal Offset 6-55
6.12.1 Automatic Adjustment 6-55
6.12.2 Manual Adjustment 6-57

6.13 Forcing the Motor to Stop 6-59
6.13.1 FSTP (Forced Stop Input) Signal 6-59
6.13.2 Stopping Method Selection for Forced Stops . . 6-59
6.13.3 Resetting Method for Forced Stops 6-61

6.14 Overheat Protection 6-62
6.14.1 Connecting the Overheat Protection Input (TH) Signal 6-62
6.14.2 Overheat Protection Selection 6-63

6.1 I/O Signal Allocations

Functions are allocated to the pins on the I/O signal connector (CN1) in advance. You can change the allocations and the polarity for some of the connector pins. Function allocations and polarity settings are made with parameters.

This section describes the I/O signal allocations.

6.1.1 Input Signal Allocations

Important

- If you change the default polarity settings for the P-OT (Forward Drive Prohibit) or N-OT (Reverse Drive Prohibit) signal, the overtravel function will not operate if there are signal line disconnections or other problems. If you must change the polarity of one of these signals, verify operation and make sure that no safety problems will exist.
- If you allocate two or more signals to the same input circuit, a logical OR of the inputs will be used and all of the allocated signals will operate accordingly. This may result in unexpected operation.

The input signals that you can allocate to the pins on the I/O signal connector (CN1) and the related parameters are given in the following table.

Input Signal	Input Signal Name	Parameter
P-OT	Forward Drive Prohibit	Pn50A = n.X□□□
N-OT	Reverse Drive Prohibit	Pn50B = n.□□□X
/P-CL	Forward External Torque Limit	Pn50B = n.□X□□
/N-CL	Reverse External Torque Limit	Pn50B = n.X□□□
/DEC	Origin Return Deceleration Switch Input	Pn511 = n.□□□X
/EXT1	External Latch Input 1	Pn511 = n.□□X□
/EXT2	External Latch Input 2	Pn511 = n.□X□□
/EXT3	External Latch Input 3	Pn511 = n.X□□□
FSTP	Forced Stop	Pn516 = n.□□□X

◆ Relationship between Parameter Settings, Allocated Pins, and Polarities

The following table shows the relationship between the input signal parameter settings, the pins on the I/O signal connector (CN1), and polarities.

Parameter Setting	Pin No.	Description
0	13	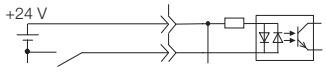 A reverse signal (a signal with "/" before the signal abbreviation, such as the /P-CL signal) is active when the contacts are ON (closed). A signal that does not have "/" before the signal abbreviation (such as the P-OT signal) is active when the contacts are OFF (open).
1	7	
2	8	
3	9	
4	10	
5	11	
6	12	
7	–	The input signal is not allocated to a connector pin and it is always active. If the signal is processed on a signal edge, then it is always inactive.
8	–	The input signal is not allocated to a connector pin and it is always inactive. Set the parameter to 8 if the signal is not used.

Continued on next page.

Continued from previous page.

Parameter Setting	Pin No.	Description
9	13	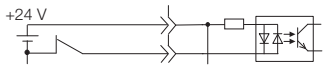 A reverse signal (a signal with "/" before the signal abbreviation, such as the /P-CL signal) is active when the contacts are OFF (open). A signal that does not have "/" before the signal abbreviation (such as the P-OT signal) is active when the contacts are ON (closed).
A	7	
B	8	
C	9	
D	10	
E	11	
F	12	

Note: 1. You cannot allocate the /EXT1 to /EXT3 (External Latch Inputs 1 to 3) signals to pins 10 to 12 on the I/O signal connector (CN1).
2. Refer to the following section for details on input signal parameter settings.
☞ *13.1.2 List of Servo Parameters* on page 13-3

Example of Changing Input Signal Allocations

The following example shows reversing the P-OT (Forward Drive Prohibit) signal allocated to CN1-7 and the /DEC (Origin Return Deceleration Switch) signal allocated to CN1-9.

Pn50A = n.1□□1 Pn511 = n.□□□3 Before change

↓ ↓

Pn50A = n.3□□1 Pn511 = n.□□□1 After change

Refer to the following section for the parameter setting procedure.
☞ *5.1.3 Parameter Setting Methods* on page 5-6

Confirming the Allocation Status of Input Signals

You can confirm the allocation status of input signals with the I/O Signal Allocations Window of the SigmaWin+. Refer to the following section for details.
☞ *9.2.3 I/O Signals Status Monitor* on page 9-5

6.1.2 Output Signal Allocations

You can allocate the desired output signals to pins 1, 2, and 23 to 26 on the I/O signal connector (CN1). You set the allocations in the following parameters: Pn50E, Pn50F, Pn510, and Pn514.

However, you can also force outputs on the servo command I/O signal (SVCMD_IO) command.

Information is provided here for when signals are allocated with Pn50E, Pn50F, Pn510, and Pn514.

Refer to the following section for details on forcing outputs with the SVCMD_IO command.
☞ *6.1.2 Output Signal Allocations - Forcing Outputs with MECHATROLINK-III Commands* on page 6-7

Important

- The signals that are not detected are considered to be OFF. For example, the /COIN (Positioning Completion) signal is considered to be OFF during speed control.
- Reversing the polarity of the /BK (Brake) signal, i.e., changing it to positive logic, will prevent the holding brake from operating if its signal line is disconnected. If you must change the polarity of this signal, verify operation and make sure that no safety problems will exist.
- If you allocate more than one signal to the same output circuit, a logical OR of the signals will be output.

Output signals are allocated as shown in the following table.

Refer to *Interpreting the Output Signal Allocation Tables* and change the allocations accordingly.

Interpreting the Output Signal Allocation Tables

These columns give the parameter settings to use. Signals are allocated to CN1 pins according to the settings.

Output Signal Name and Parameter	Output Signals	CN1 Pin No.			Disabled (Not Used)
		1 and 2	23 and 24	25 and 26	
Brake Pn50F = □X□□	/BK	1	2	3	0

Output Signal Name and Parameter	Output Signals	CN1 Pin No.			Disabled (Not Used)
		1 and 2	23 and 24	25 and 26	
Positioning Completion Pn50E = n.□□□X	/COIN	1	2	3	0 (default setting)
Speed Coincidence Detection Pn50E = n.□□X□	/V-CMP	1	2	3	0 (default setting)
Rotation Detection Pn50E = n.□X□□	/TGON	1	2	3	0 (default setting)
Servo Ready Pn50E = n.X□□□	/S-RDY	1	2	3	0 (default setting)
Torque Limit Detection Pn50F = n.□□□X	/CLT	1	2	3	0 (default setting)
Speed Limit Detection Pn50F = n.□□X□	/VLT	1	2	3	0 (default setting)
Brake Pn50F = n.□X□□	/BK	1 (default setting)	2	3	0
Warning Pn50F = n.X□□□	/WARN	1	2	3	0 (default setting)
Near Pn510 = n.□□□X	NEAR	1	2	3	0 (default setting)
Preventative Maintenance Pn514 = n.□X□□	/PM	1	2	3	0 (default setting)
Pn512 = n.□□□1	Reverse polarity for CN1-1 and CN1-2				0 (default setting) (The polarity is not reversed in the default settings.)
Pn512 = n.□□1□	Reverse polarity for CN1-23 and CN1-24				
Pn512 = n.□1□□	Reverse polarity for CN1-25 and CN1-26				

Example of Changing Output Signal Allocations

The following example shows disabling the /COIN (Positioning Completion) signal allocated to CN1-25 and CN1-26 and allocating the /SRDY (Servo Ready) signal.

Pn50E = n.0□□3 Before change

↓

Pn50E = n.3□□0 After change

Refer to the following section for the parameter setting procedure.

☞ *5.1.3 Parameter Setting Methods* on page 5-6

Confirming the Allocation Status of Output Signals

You can confirm the allocation status of output signals with the I/O Signal Allocations Window of the SigmaWin+. Refer to the following section for details.

☞ *9.2.3 I/O Signals Status Monitor* on page 9-5

Forcing Outputs with MECHATROLINK-III Commands

You can use the servo command I/O signal (SVCMD_IO) command through MECHATROLINK-III communications to force outputs on general-purpose sequence output 1 (SO1) to general-purpose sequence output 3 (SO3).

Use Pn56A = n.□XXX to set the output signal reference method for SO1 to SO3.

Refer to the following manual for detailed information on the servo command I/O signal (SVCMD_IO) command.

Σ-7-Series MECHATROLINK-III Communications Standard Servo Profile Command Manual (Manual No.: SIEP S800001 31)

Parameter		Description	When Enabled	Classification
Pn56A	n.□□□0 (default setting)	Output parameter-assigned SO1 signal.	After restart	Setup
	n.□□□1	Output OR of parameter-assigned SO1 signal and signal set by SVCMD_IO.		
	n.□□0□ (default setting)	Output parameter-assigned SO2 signal.		
	n.□□1□	Output OR of parameter-assigned SO2 signal and signal set by SVCMD_IO.		
	n.□0□□ (default setting)	Output parameter-assigned SO3 signal.		
	n.□1□□	Output OR of parameter-assigned SO3 signal and signal set by SVCMD_IO.		

Example If you change the setting of Pn56A from the default setting to n.□□□1, an OR of the /BK signal and the signal that is set with the servo command I/O signal (SVCMD_IO) command will be output.

Important To output only the signal that is set with the servo command I/O signal (SVCMD_IO) command on SO1 to SO3, disable the signal that is allocated with the parameter (i.e., set it to not use the signal).

6.1.3 ALM (Servo Alarm) Signal

This signal is output when the SERVOPACK detects an error.

> **Important**
> Configure an external circuit so that this alarm output turns OFF the main circuit power supply to the SERVOPACK whenever an error occurs.

Type	Signal	Connector Pin No.	Signal Status	Meaning
Output	ALM	CN1-3 and CN1-4	ON (closed)	Normal SERVOPACK status
			OFF (open)	SERVOPACK alarm

Alarm Reset Methods

Refer to the following section for information on the alarm reset methods.

☞ *12.2.3 Resetting Alarms* on page 12-42

6.1.4 /WARN (Warning) Signal

Both alarms and warnings are generated by the SERVOPACK. Alarms indicate errors in the SERVOPACK for which operation must be stopped immediately. Warnings indicate situations that may results in alarms but for which stopping operation is not yet necessary.

The /WARN (Warning) signal indicates that a condition exists that may result in an alarm.

Type	Signal	Connector Pin No.	Signal Status	Meaning
Output	/WARN	Must be allocated.	ON (closed)	Warning
			OFF (open)	Normal status

Note: You must allocate the /WARN signal to use it. Use Pn50F = n.X□□□ (/WARN (Warning Output) Signal Allocation) to allocate the signal to a connector pin. Refer to the following section for details.

☞ *6.1.2 Output Signal Allocations* on page 6-5

6.1.5 /TGON (Rotation Detection) Signal

The /TGON signal indicates that the Servomotor is operating.

This signal is output when the shaft of the Servomotor rotates at the setting of Pn502 (Rotation Detection Level) or faster or the setting of Pn581 (Zero Speed Level) or faster.

Type	Signal	Connector Pin No.	Signal Status	Servomotor	Meaning
Output	/TGON	Must be allocated.	ON (closed)	Rotary Servomotors	The Servomotor is operating at the setting of Pn502 or faster.
				Linear Servomotors	The Servomotor is operating at the setting of Pn581 or faster.
			OFF (open)	Rotary Servomotors	The Servomotor is operating at a speed that is slower than the setting of Pn502.
				Linear Servomotors	The Servomotor is operating at a speed that is slower than the setting of Pn581.

Note: You must allocate the /TGON signal to use it. Use Pn50E = n.□X□□ (/TGON (Rotation Detection Output) Signal Allocation) to allocate the signal to a connector pin. Refer to the following section for details.
☞ *6.1.2 Output Signal Allocations* on page 6-5

Setting the Rotation Detection Level

Use the following parameter to set the speed detection level at which to output the /TGON signal.

- Rotary Servomotors

Pn502	Rotation Detection Level			Speed Position Torque	
	Setting Range	Setting Unit	Default Setting	When Enabled	Classification
	1 to 10,000	1 min^{-1}	20	Immediately	Setup

- Linear Servomotors

Pn581	Zero Speed Level			Speed Position Force	
	Setting Range	Setting Unit	Default Setting	When Enabled	Classification
	1 to 10,000	1 mm/s	20	Immediately	Setup

6.1.6 /S-RDY (Servo Ready) Signal

The /S-RDY (Servo Ready) signal turns ON when the SERVOPACK is ready to accept the SV_ON (Servo ON) command.

The /S-RDY signal is turned ON under the following conditions.

- Main circuit power supply is ON.
- There is no hard wire base block state.
- There are no alarms.
- If an absolute encoder is used, the SENS_ON (Turn ON Sensor) command has been input.
- If a Servomotor without a polarity sensor is used, polarity detection has been completed. *
- If an absolute encoder is used, the output of the position data from the absolute encoder to the host controller must have been completed if the SENS_ON (Turn ON Sensor) command is being input.

* Do not include this condition if the SV_ON (Servo ON) command is input for the first time after the control power supply was turned ON. In that case, when the first SV_ON command is input, polarity detection is started immediately and the /S-RDY signal turns ON at the completion of polarity detection.

Type	Signal	Connector Pin No.	Signal Status	Meaning
Output	/S-RDY	Must be allocated.	ON (closed)	Ready to receive the SV_ON (Servo ON) command.
			OFF (open)	Not ready to receive the SV_ON (Servo ON) command.

Note: 1. You must allocate the /S-RDY signal to use it. Use Pn50E = n.X□□□ (/S-RDY (Servo Ready) Signal Allocation) to allocate the signal to a connector pin. Refer to the following section for details.
☞ *6.1.2 Output Signal Allocations* on page 6-5

2. Refer to the following section for information on the hard wire base block and the /S-RDY signal.
☞ *11.2.8 /S-RDY (Servo Ready Output) Signal* on page 11-7

6.1.7 /V-CMP (Speed Coincidence Detection) Signal

The /V-CMP (Speed Coincidence Output) signal is output when the Servomotor speed is the same as the reference speed. This signal is used, for example, to interlock the SERVOPACK and the host controller. You can use this output signal only during speed control.

The /V-CMP signal is described in the following table.

Type	Signal	Connector Pin No.	Signal Status	Meaning
Output	/V-CMP	Must be allocated.	ON (closed)	The speed coincides.
			OFF (open)	The speed does not coincide.

Note: You must allocate the /V-CMP signal to use it. Use Pn50E = n.□□X□ (/V-CMP (Speed Coincidence Detection Output) Signal Allocation) to allocate the signal to connector pins.
Refer to the following section for details on allocations.
☞ *6.1.2 Output Signal Allocations* on page 6-5

You can set the speed detection width for the /V-CMP signal in Pn503 (Speed Coincidence Detection Signal Output Width) for a Rotary Servomotor or in Pn582 (Speed Coincidence Detection Signal Output Width) for a Linear Servomotor.

- Rotary Servomotors

Pn503	Speed Coincidence Detection Signal Output Width			Speed	
	Setting Range	Setting Unit	Default Setting	When Enabled	Classification
	0 to 100	1 min^{-1}	10	Immediately	Setup

The signal is output when the difference between the reference speed and motor speed is equal or less than the setting.

Example: If Pn503 is set to 100 and the speed reference is 2,000 min^{-1}, the signal would be output when the motor speed is between 1,900 min^{-1} and 2,100 min^{-1}.

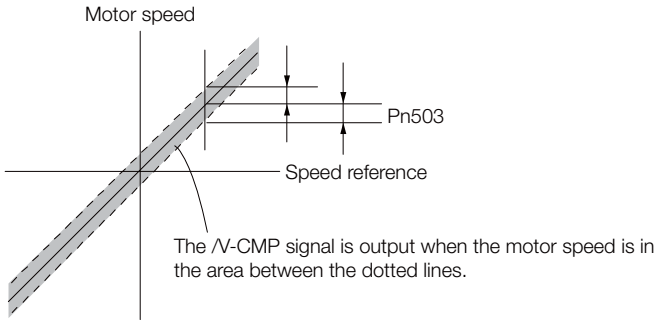

- Linear Servomotors

Pn582	Speed Coincidence Detection Signal Output Width			Speed	
	Setting Range	Setting Unit	Default Setting	When Enabled	Classification
	0 to 100	1 mm/s	10	Immediately	Setup

The signal is output when the difference between the reference speed and motor speed is equal or less than the setting.

Example: If Pn582 is set to 100 and the speed reference is 2,000 mm/s the signal would be output when the motor speed is between 1,900 mm/s and 2,100 mm/s.

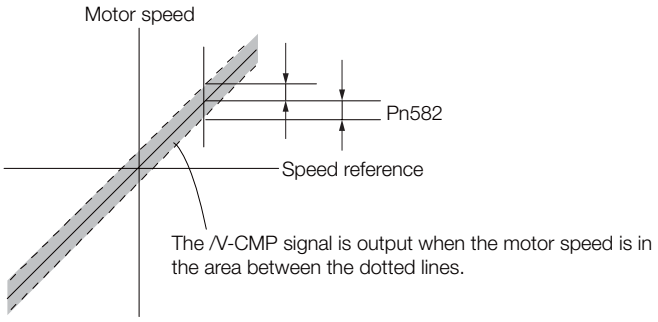

6.1.8 /COIN (Positioning Completion) Signal

The /COIN (Positioning Completion) signal indicates that Servomotor positioning has been completed during position control.

The /COIN signal is output when the difference between the reference position output by the host controller and the current position of the Servomotor (i.e., the position deviation as given by the value of the deviation counter) is equal to or less than the setting of the positioning completed width (Pn522).

Use this signal to check the completion of positioning from the host controller.

Type	Signal	Connector Pin No.	Signal Status	Meaning
Output	/COIN	Must be allocated.	ON (closed)	Positioning has been completed.
			OFF (open)	Positioning has not been completed.

Note: You must allocate the /COIN signal to use it. Use Pn50E = n.□□□X (/COIN (Positioning Completion Output) Signal Allocation) to allocate the signal to connector pins. Refer to the following section for details on allocations.

☞ *6.1.2 Output Signal Allocations* on page 6-5

Setting the Positioning Completed Width

The /COIN signal is output when the difference between the reference position and the current position (i.e., the position deviation as given by the value of the deviation counter) is equal to or less than the setting of the positioning completed width (Pn522).

Pn522	Positioning Completed Width				Position
	Setting Range	Setting Unit	Default Setting	When Enabled	Classification
	0 to 1,073,741,824	1 reference unit	7	Immediately	Setup

The setting of the positioning completed width has no effect on final positioning accuracy.

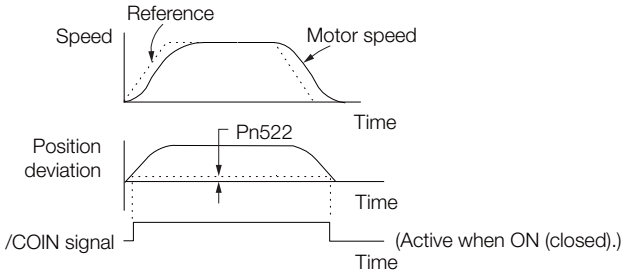

Note: If the parameter is set to a value that is too large, the /COIN signal may be output when the position deviation is low during a low-speed operation. If that occurs, reduce the setting until the signal is no longer output.

Setting the Output Timing of the /COIN (Positioning Completion Output) Signal

You can add a reference input condition to the output conditions for the /COIN signal to change the signal output timing.

If the position deviation is always low and a narrow positioning completed width is used, change the setting of Pn207 = n.X□□□ (/COIN (Positioning Completion Output) Signal Output Timing) to change output timing for the /COIN signal.

Parameter		Description	When Enabled	Classification
Pn207	n.0□□□ (default setting)	Output the /COIN signal when the absolute value of the position deviation is the same or less than the setting of Pn522 (Positioning Completed Width).	After restart	Setup
	n. 1□□□	Output the /COIN signal when the absolute value of the position deviation is the same or less than the setting of Pn522 (Positioning Completed Width) and the reference after the position reference filter is 0.		
	n. 2□□□	Output the /COIN signal when the absolute value of the position deviation is the same or less than the setting of Pn522 (Positioning Completed Width) and the reference input is 0.		

6.1.9 /NEAR (Near) Signal

The /NEAR (Near) signal indicates when positioning completion is being approached.

The host controller receives the NEAR signal before it receives the /COIN (Positioning Completion) signal, it can start preparations for the operating sequence to use after positioning has been completed. This allows you to reduce the time required for operation when positioning is completed.

The NEAR signal is generally used in combination with the /COIN signal.

Type	Signal	Connector Pin No.	Signal Status	Meaning
Output	/NEAR	Must be allocated.	ON (closed)	The Servomotor has reached a point near to positioning completion.
			OFF (open)	The Servomotor has not reached a point near to positioning completion.

Note: You must allocate the /NEAR signal to use it. Use Pn510 = n.□□□X (/NEAR (Near) Signal Allocation) to allocate the signal to a connector pin. Refer to the following section for details.
☞ *6.1.2 Output Signal Allocations* on page 6-5

/NEAR (Near) Signal Setting

You set the condition for outputting the /NEAR (Near) signal (i.e., the near signal width) in Pn524 (Near Signal Width). The /NEAR signal is output when the difference between the reference position and the current position (i.e., the position deviation as given by the value of the deviation counter) is equal to or less than the setting of the near signal width (Pn524).

Pn524	Near Signal Width			Position	
	Setting Range	Setting Unit	Default Setting	When Enabled	Classification
	1 to 1,073,741,824	1 reference unit	1,073,741,824	Immediately	Setup

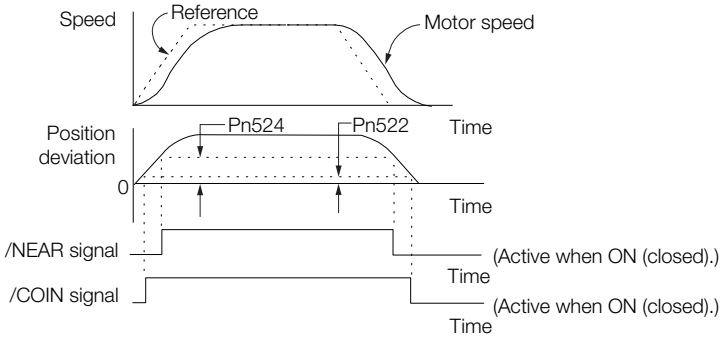

Note: Normally, set Pn524 to a value that is larger than the setting of Pn522 (Positioning Completed Width).

6.1.10 Speed Limit during Torque Control

You can limit the speed of the Servomotor to protect the machine.

When you use a Servomotor for torque control, the Servomotor is controlled to output the specified torque, but the motor speed is not controlled. Therefore, if a reference torque is input that is larger than the machine torque, the speed of the Servomotor may increase greatly. If that may occur, use this function to limit the speed.

Note: The actual limit of Servomotor speed depends on the load conditions on the Servomotor.

With No Speed Limit	With a Speed Limit
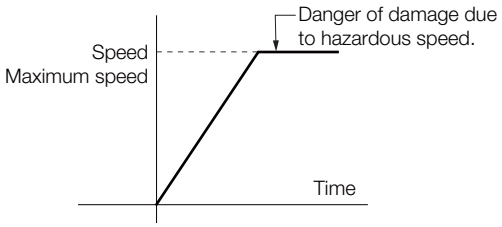	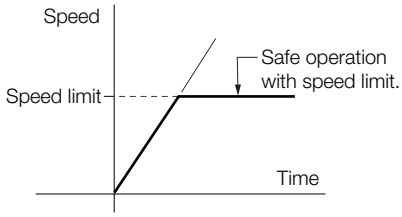

/VLT (Speed Limit Detection) Signal

The signal that is output when the motor speed is being limited by the speed limit is described in the following table.

Type	Signal	Connector Pin No.	Signal Status	Meaning
Output	/VLT	Must be allocated.	ON (closed)	The Servomotor speed is being limited.
			OFF (open)	The Servomotor speed is not being limited.

Note: You must allocate the /VLT signal to use it. Use Pn50F = n.□□X□ (/VLT (Speed Limit Detection) Signal Allocation) to allocate the signal to a connector pin. Refer to the following section for details.
☞ *6.1.2 Output Signal Allocations* on page 6-5

Selecting the Speed Limit

The smaller of the external speed limit and internal speed limit will be used.

Parameter		Meaning	When Enabled	Classification
Pn002	n.□□0□	Reserved setting (Do not use.)	After restart	Setup
	n.□□1□ (default setting)	Use the speed limit from the VLIM (Limit Speed for Torque Control) command as the speed limit. (Use external speed limiting.)		

◆ Internal Speed Limiting

Set the speed limit for the motor in Pn407 (Speed Limit during Torque Control) or Pn480 (Speed Limit during Force Control).

Also set Pn408 = n.□□X□ (Speed Limit Selection) to specify using the maximum motor speed or the overspeed alarm detection speed as the speed limit. Select the overspeed alarm detection speed to limit the speed to the equivalent of the maximum motor speed.

Parameter		Meaning	When Enabled	Classification
Pn408	n.□□0□ (default setting)	Use the smaller of the maximum motor speed and the setting of Pn407 or Pn480 as the speed limit.	After restart	Setup
	n.□□1□	Use the smaller of the overspeed alarm detection speed and the setting of Pn407 or Pn480 as the speed limit.		

Note: If you are using a Rotary Servomotor, set Pn407 (Speed Limit during Torque Control). If you are using a Linear Servomotor, set Pn480 (Speed Limit during Force Control).

- Rotary Servomotors

Pn407	Speed Limit during Torque Control				Torque
	Setting Range	Setting Unit	Default Setting	When Enabled	Classification
	0 to 10,000	1 min^{-1}	10000	Immediately	Setup

- Linear Servomotors

Pn480	Speed Limit during Force Control				Force
	Setting Range	Setting Unit	Default Setting	When Enabled	Classification
	0 to 10,000	1 mm/s	10000	Immediately	Setup

Note: If the parameter setting exceeds the maximum speed of the Servomotor, the Servomotor's maximum speed or the overspeed alarm detection speed will be used.

◆ External Speed Limiting

The motor speed will be limited by VLIM (Limit Speed for Torque Control). Refer to the following manual for details.

Σ-7-Series MECHATROLINK-III Communications Standard Servo Profile Command Manual (Manual No.: SIEP S800001 31)

6.2 Operation for Momentary Power Interruptions

Even if the main power supply to the SERVOPACK is interrupted momentarily, power supply to the motor (servo ON status) will be maintained for the time set in Pn509 (Momentary Power Interruption Hold Time).

Pn509	Momentary Power Interruption Hold Time			Speed Position Torque	
	Setting Range	Setting Unit	Default Setting	When Enabled	Classification
	20 to 50,000	1 ms	20	Immediately	Setup

If the momentary power interruption time is equal to or less than the setting of Pn509, power supply to the motor will be continued. If it is longer than the setting, power supply to the motor will be stopped. Power will be supplied to the motor again when the main circuit power supply recovers.

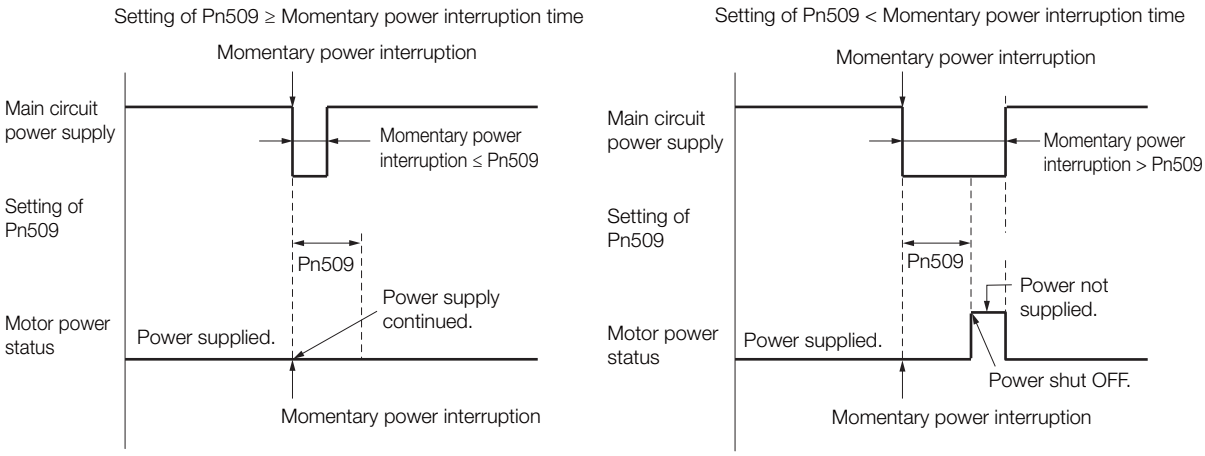

Information

1. If the momentary power interruption time exceeds the setting of Pn509, the /S-RDY (Servo Ready) signal will turn OFF.
2. If uninterruptible power supplies are used for the control power supply and main circuit power supply, the SERVOPACK can withstand a power interruption that lasts longer than 50,000 ms.
3. The holding time of the SERVOPACK control power supply is approximately 100 ms. If control operations become impossible during a momentary power interruption of the control power supply, the setting of Pn509 will be ignored and the same operation will be performed as for when the power supply is turned OFF normally.

Important

The holding time of the main circuit power supply depends on the output from the SERVOPACK. If the load on the Servomotor is large and an A.410 alarm (Undervoltage) occurs, the setting of Pn509 will be ignored.

6.3 SEMI F47 Function

The SEMI F47 function detects an A.971 warning (Undervoltage) and limits the output current if the DC main circuit power supply voltage to the SERVOPACK drops to a specified value or lower because the power was momentarily interrupted or the main circuit power supply voltage was temporarily reduced.

This function complies with the SEMI F47 standards for semiconductor manufacturing equipment.

You can combine this function with the momentary power interruption hold time (Pn509) to allow the Servomotor to continue operating without stopping for an alarm or without recovery work even if the power supply voltage drops.

Execution Sequence

This function can be executed either with the host controller or with the SERVOPACK. Use Pn008 = n.□□X□ (Function Selection for Undervoltage) to specify whether the function is executed by the host controller or by the SERVOPACK.

The default setting (Pn008 = n.□□0□) disables detection of an A.971 warning (Undervoltage).

Parameter		Meaning	When Enabled	Classification
Pn008	n.□□0□ (default setting)	Do not detect undervoltage warning.	After restart	Setup
	n.□□1□	Detect undervoltage warning and limit torque at host controller.		
	n.□□2□	Detect undervoltage warning and limit torque with Pn424 and Pn425 (i.e., only in SERVOPACK).		

◆ Execution with the Host Controller (Pn008 = n.□□1□)

The host controller limits the torque in response to an A.971 warning (Undervoltage).

The host controller removes the torque limit after the Undervoltage warning is cleared.

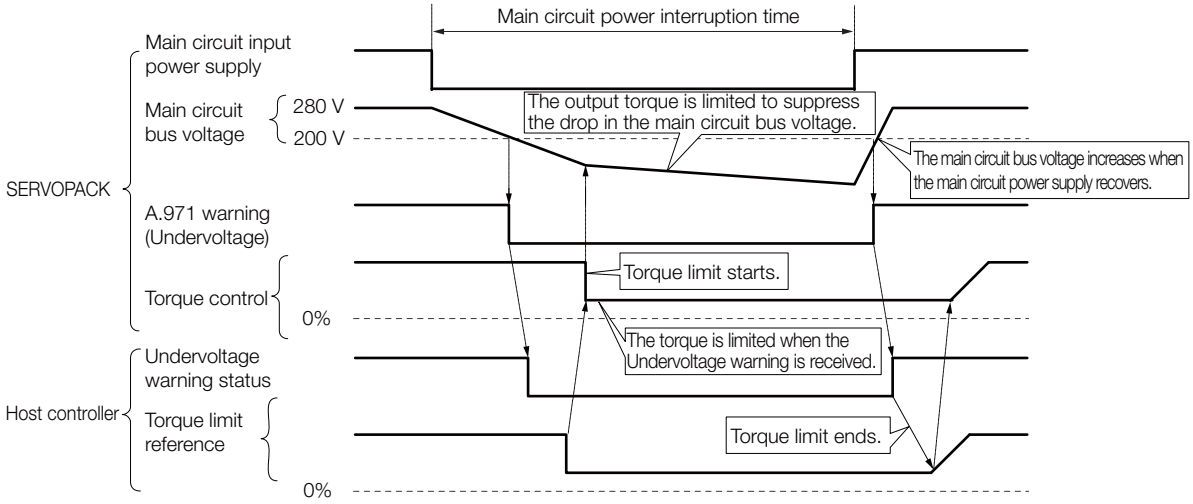

◆ Execution with the SERVOPACK (Pn008 = n.□□2□)

The torque is limited in the SERVOPACK in response to an Undervoltage warning.
The SERVOPACK controls the torque limit for the set time after the Undervoltage warning is cleared.

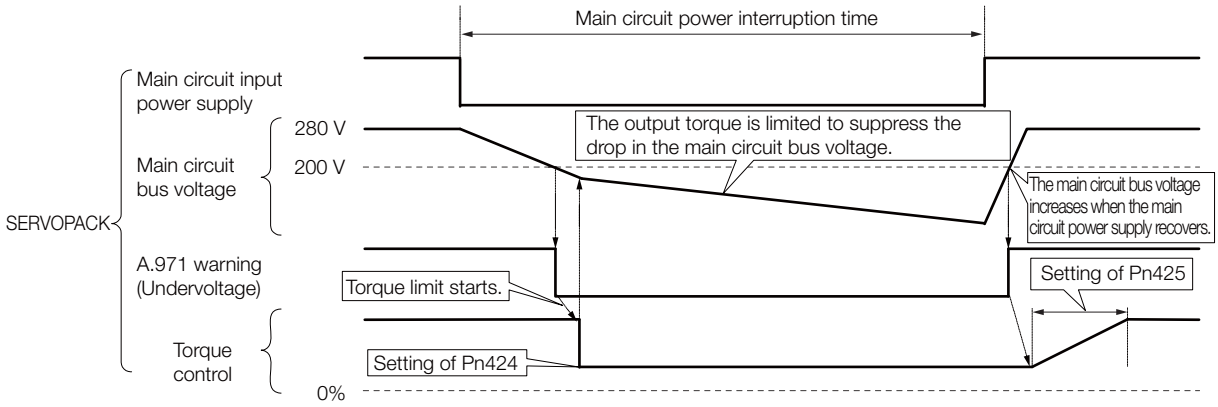

Related Parameters

The following parameters are related to the SEMI F47 function.

Pn424	Torque Limit at Main Circuit Voltage Drop			Speed Position Torque	
	Setting Range	Setting Unit	Default Setting	When Enabled	Classification
	0 to 100	1%*	50	Immediately	Setup
Pn425	Release Time for Torque Limit at Main Circuit Voltage Drop			Speed Position Torque	
	Setting Range	Setting Unit	Default Setting	When Enabled	Classification
	0 to 1,000	1 ms	100	Immediately	Setup
Pn509	Momentary Power Interruption Hold Time			Speed Position Torque	
	Setting Range	Setting Unit	Default Setting	When Enabled	Classification
	20 to 50,000	1 ms	20	Immediately	Setup

* Set a percentage of the motor rated torque.

Note: If you will use the SEMI F47 function, set the time to 1,000 ms.

Important

- This function handles momentary power interruptions for the voltage and time ranges stipulated in SEMI F47. An uninterruptible power supply (UPS) is required as a backup for momentary power interruptions that exceed these voltage and time ranges.
- Set the host controller or SERVOPACK torque limit so that a torque reference that exceeds the specified acceleration torque will not be output when the power supply for the main circuit is restored.
- For a vertical axis, do not limit the torque to a value that is lower than the holding torque.
- This function limits torque within the range of the SERVOPACK's capability for power interruptions. It is not intended for use under all load and operating conditions. Set the parameters while monitoring operation on the actual machine.
- You can set the momentary power interruption hold time to increase the amount of time from when the power supply is turned OFF until power supply to the motor is stopped. To stop the power supply to the motor immediately, use the SV_OFF (Servo ON) command.

6.4 Setting the Motor Maximum Speed

You can set the maximum speed of the Servomotor with the following parameter.

- Rotary Servomotors

Pn316	Maximum Motor Speed			Speed Position Torque	
	Setting Range	Setting Unit	Default Setting	When Enabled	Classification
	0 to 65,535	1 min^{-1}	10,000	After restart	Setup

- Linear Servomotors

Pn385	Maximum Motor Speed			Speed Position Force	
	Setting Range	Setting Unit	Default Setting	When Enabled	Classification
	1 to 100	100 mm/s	50	After restart	Setup

You can achieve the following by lowering the maximum speed of the Servomotor.

- If the Servomotor speed exceeds the setting, an A.510 alarm (Overspeed) will occur.
- With a Linear Servomotor, you can increase the upper limit for the setting of Pn281 (Encoder Output Resolution). Refer to the following section for details.
  ☞ *6.5 Encoder Divided Pulse Output* on page 6-20

Changing the setting of the parameter is effective in the following cases.

- To protect the machine by stopping machine operation with an alarm when the set speed is reached or exceeded
- To limit the speed so that the load is driven beyond the allowable moment of inertia
  Refer to relevant manual from the following list for the relationship between the speed and the allowable moment of inertia.
  - 📖 Σ-7-Series Rotary Servomotor Product Manual (Manual No.: SIEP S800001 36)
  - 📖 Σ-7-Series Direct Drive Servomotor Product Manual (Manual No.: SIEP S800001 38)
  - 📖 Σ-7-Series Linear Servomotor Product Manual (Manual No.: SIEP S800001 37)
- To increase the encoder output resolution and increase the position resolution managed by the host controller (for a Linear Servomotor)

6.5 Encoder Divided Pulse Output

The encoder divided pulse output is a signal that is output from the encoder and processed inside the SERVOPACK. It is then output externally in the form of two phase pulse signals (phases A and B) with a 90° phase differential. At the host controller, it can be used as the position feedback.

The following table describes the signals and output phase forms.

6.5.1 Encoder Divided Pulse Output Signals

Type	Signal	Connector Pin No.	Name	Remarks
Output	PAO	CN1-17	Encoder Divided Pulse Output, Phase A	• Rotary Servomotors These encoder divided pulse output pins output the number of pulses per Servomotor resolution that is set in Pn212 (Number of Encoder Output Pulses). The phase difference between phase A and phase B is an electric angle of 90°. • Linear Servomotors These encoder divided pulse output pins output pulses at the resolution that is set in Pn281 (Encoder Output Resolution). The phase difference between phase A and phase B is an electric angle of 90°.
	/PAO	CN1-18		
	PBO	CN1-19	Encoder Divided Pulse Output, Phase B	
	/PBO	CN1-20		
	PCO	CN1-21	Encoder Divided Pulse Output, Phase C*	These pins output one pulse every Servomotor rotation.
	/PCO	CN1-22		

* Refer to the following section for information on the origin within one encoder rotation.
☞ ◆ *Relation between Renishaw PLC Incremental Linear Encoders and Encoder Output Pulse Signal from the SERVOPACK When Using a RGS20 Scale and RGH22B Sensor Head* on page 6-21

• Rotary Servomotor

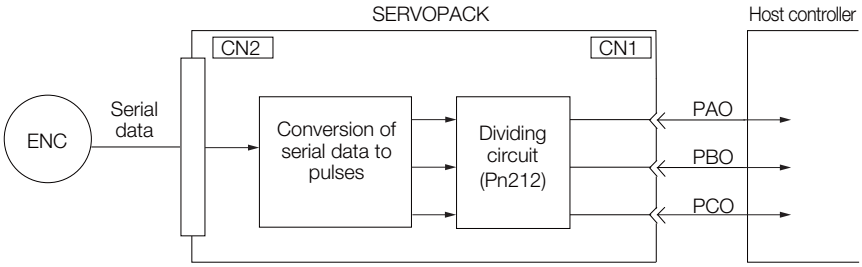

• Linear Servomotors

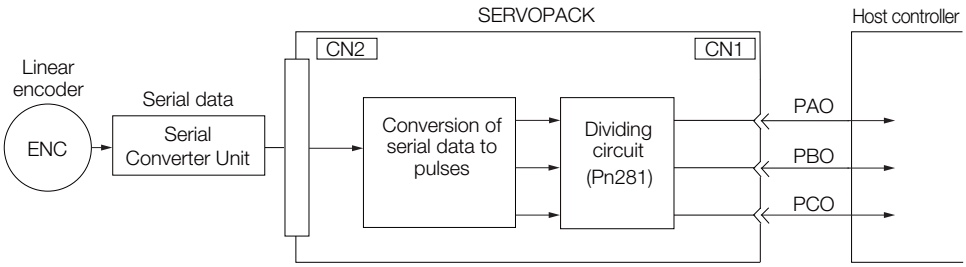

Output Phase Forms

Forward rotation or movement (phase B leads by 90°)	Reverse rotation or movement (phase A leads by 90°)
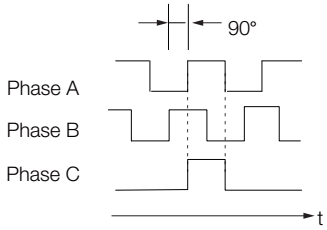	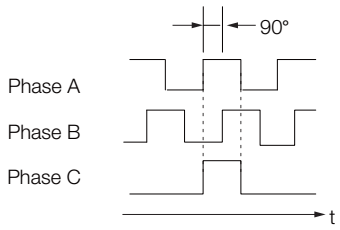

Note: The pulse width of the origin within one encoder rotation depends on the setting of number of encoder output pulses (Pn212) or the encoder output resolution (Pn281). It is the same as the width of phase A.
Even for reverse operation (Pn000 = n.□□□1), the output phase form is the same as shown above.

> **Important**
> If you use the SERVOPACK's phase-C pulse output for an origin return, rotate the Servomotor two or more rotations before you start an origin return. If the Servomotor cannot be rotated two or more times, perform an origin return operation at a motor speed of 600 min^{-1} or lower. If the motor speed is higher than 600 min^{-1}, the phase-C pulse may not be output correctly.

Linear Encoder Application Precautions

The following precautions apply to the encoder output pulses when an external linear encoder is used.

◆ Relation between Renishaw PLC Incremental Linear Encoders and Encoder Output Pulse Signal from the SERVOPACK When Using a RGS20 Scale and RGH22B Sensor Head

The output position of the origin signal (Ref) will depend on the direction of movement for some models of incremental linear encoders from Renishaw PLC.

In that case, the phase-C pulse of the SERVOPACK is output at two positions.

For detailed specifications on the origin, refer to the manual for the Renishaw PLC incremental linear encoder.

■ When Passing the First Origin Signal (Ref) in the Forward Direction and Returning after Turning ON the Power Supply

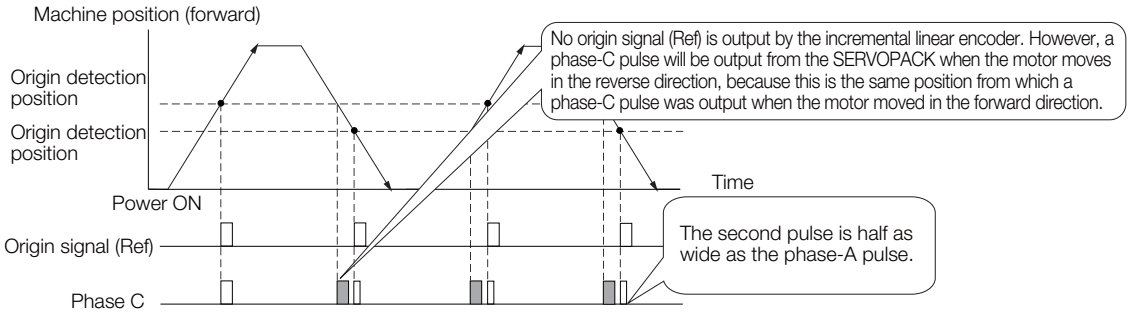

■ When Passing the First Origin Signal (Ref) in the Reverse Direction and Returning after Turning ON the Power Supply

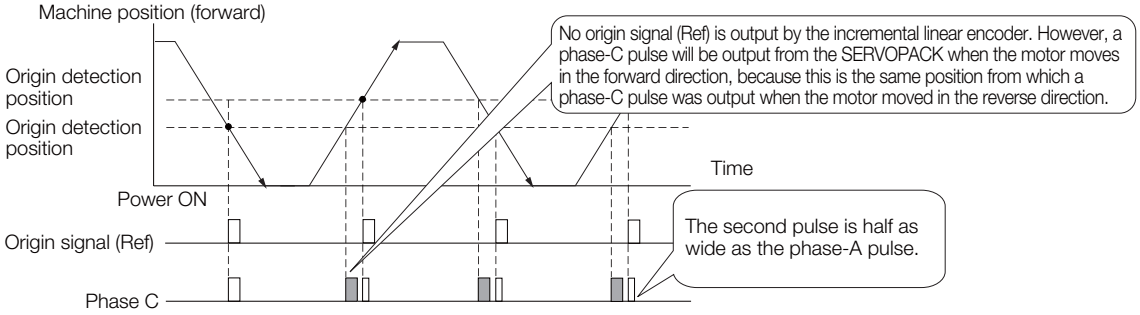

◆ Precautions When Using an Incremental Linear Encoder from Magnescale Co., Ltd.

■ Encoder Divided Phase-C Pulse Output Selection

You can also output the encoder's phase-C pulse for reverse movement. To do so, set Pn081 to n.□□□1.

Parameter		Meaning	When Enabled	Classification
Pn081	n.□□□0 (default setting)	Output phase-C pulses only in the forward direction.	After restart	Setup
	n.□□□1	Output phase-C pulses in both the forward and reverse directions.		

Important

Precautions on Setting the Phase-C Pulse Output Selection (Pn081 = n.□□□X)

- If you set Pn081 to n.□□□1 (Output phase-C pulses in both the forward and reverse directions), the width of the phase-C pulse output may be narrower than the width of the phase-A pulse.
- There is a difference of 1/8th of the scale pitch in the phase-C detection position for the encoder's phase-C pulse output position, origin return command, or phase-C latch between when Pn081 = n.□□□X is set to 0 (Output phase-C pulses only in the forward direction) and when it is set to 1 (Output phase-C pulses in both the forward and reverse directions).

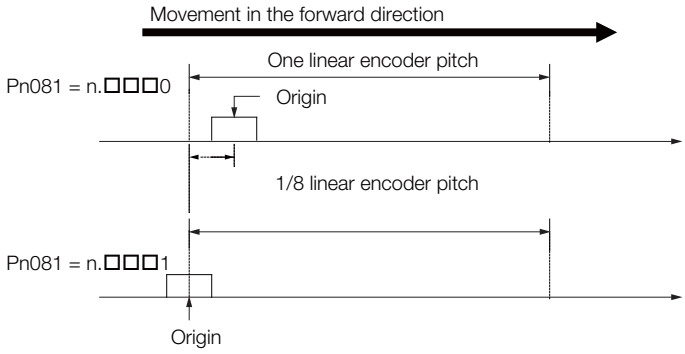

Observe the following precaution if you set Pn081 to n.□□□0 (Output phase-C pulses only in the forward direction).

When an incremental linear encoder from Magnescale Co., Ltd. is used, the count direction of the encoder determines how the phase-C pulse (CN1-21 and CN1-22) is output.

Note: The count direction (up or down) of the linear encoder determines whether a phase-C pulse is output. The output of the pulse does not depend on the setting of the movement direction (Pn000 = n.□□□1).

Encoder Model	Interpolator	Linear Encoder Pitch [μm]
SL710	PL101-RY MJ620-T13	800
SL720		800
SL730		800
SR75		80
SR85		80
SQ10	MQ10-FLA	400
	MQ10-GLA	

■ When First Passing the Origin Signal in the Forward Direction and Returning after Turning ON the Power Supply

The encoder's phase-C pulse (CN1-21 and CN1-22) is output when the origin detection position is passed for the first time in the forward direction after the power supply is turned ON.

After that, the phase-C pulse is output whenever the origin detection position is passed in the forward or reverse direction.

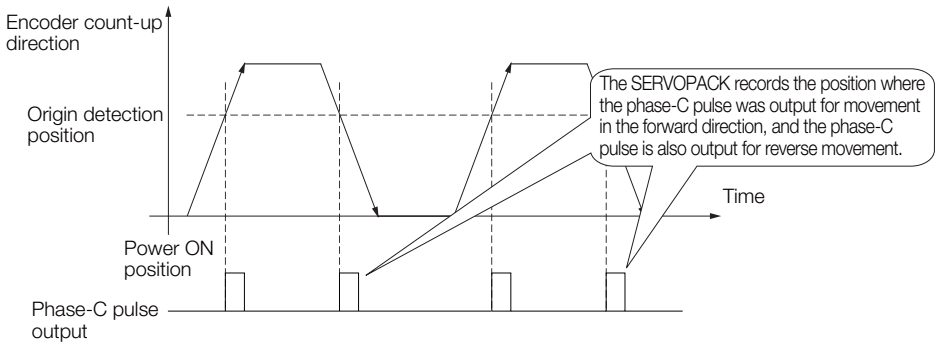

■ When First Passing the Origin Signal in the Reverse Direction and Returning after Turning ON the Power Supply

The encoder's phase-C pulse (CN1-19 and CN1-20) is not output when the origin detection position is passed for the first time in the reverse direction after the power supply is turned ON.

However, after the origin detection position is passed in the forward direction and the encoder's phase-C pulse is output, it will then also be output when the origin detection point is passed in the reverse direction.

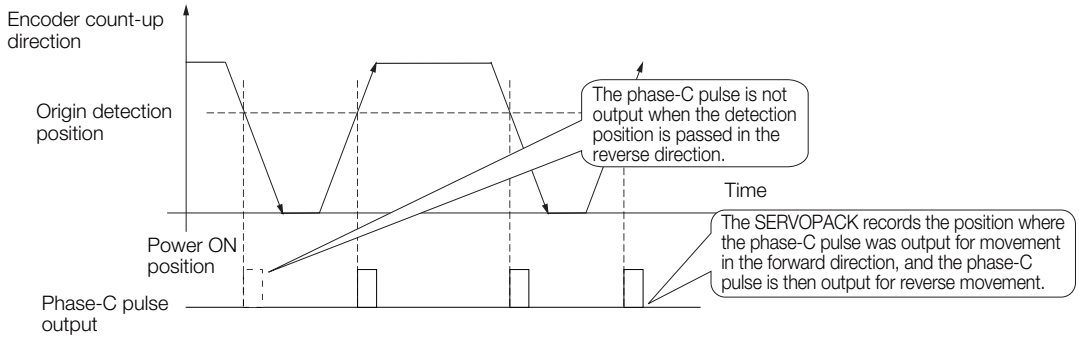

■ When Using a Linear Encoder with Multiple Origins and First Passing the Origin Position in the Forward Direction and Returning after Turning ON the Power Supply

The encoder's phase-C pulse is output when the origin detection position is passed for the first time in the forward direction after the power supply is turned ON. After that, the phase-C pulse is output whenever the origin detection position is passed in the forward or reverse direction.

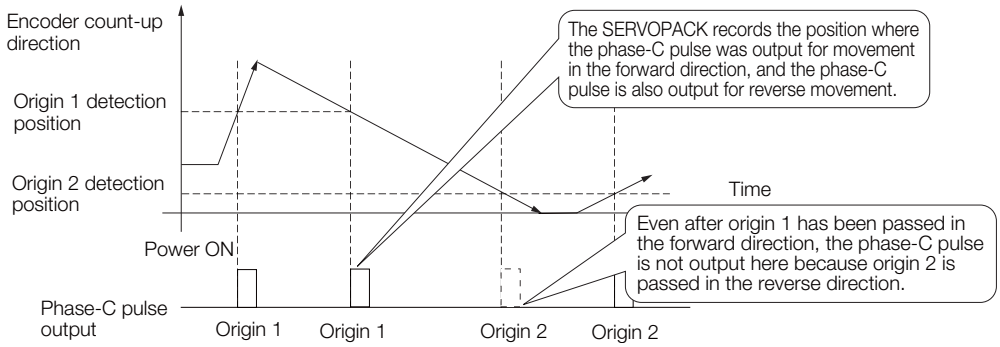

■ When Using a Linear Encoder with Multiple Origins and First Passing the Origin Position in the Reverse Direction after Turning ON the Power Supply

The encoder's phase-C pulse is not output when the origin detection position is passed for the first time in the reverse direction after the power supply is turned ON.
However, after the origin detection position is passed in the forward direction and the encoder's phase-C pulse it output, it will then also be output when the origin detection point is passed in the reverse direction.

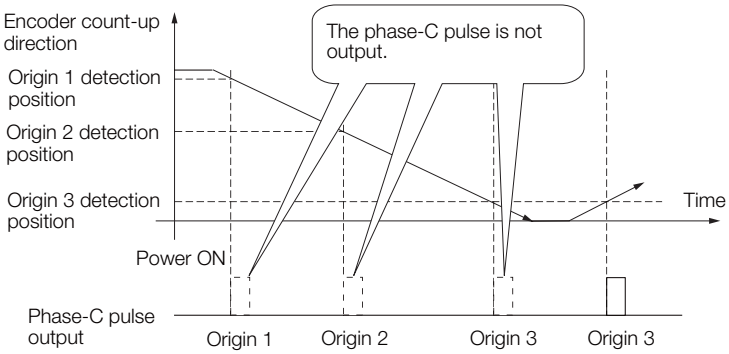

6.5.2 Setting for the Encoder Divided Pulse Output

This section describes the setting for the encoder divided pulse output for a Rotary Servomotor or Linear Servomotor.

Encoder Divided Pulse Output When Using a Rotary Servomotor

If you will use a Rotary Servomotor, set the number of encoder output pulses (Pn212).

Pn212	Number of Encoder Output Pulses			Speed Position Torque	
	Setting Range	Setting Unit	Default Setting	When Enabled	Classification
	16 to 1,073,741,824	1 P/Rev	2,048	After restart	Setup

The number of pulses from the encoder per rotation are processed inside the SERVOPACK, divided by the setting of Pn212, and then output.

Set the number of encoder divided output pulses according to the system specifications of the machine or host controller.

The setting of the number of encoder output pulses is limited by the resolution of the encoder.

Setting of the Number of Encoder Output Pulses [P/Rev]	Setting Increment	Encoder Resolution			Upper Limit of Servomotor Speed for Set Number of Encoder Output Pulses [min^{-1}]
		20 bits (1,048,576 pulses)	22 bits (4,194,304 pulses)	24 bits (16,777,216 pulses)	
16 to 16,384	1	○	○	○	6,000
16,386 to 32,768	2	○	○	○	3,000
32,772 to 65,536	4	○	○	○	1,500
65,544 to 131,072	8	○	○	○	750
131,088 to 262,144	16	○	○	○	375
262,176 to 524,288	32	–	○	○	187
524,352 to 1,048,576	64	–	○	○	93
1,048,704 to 2,097,152	128	–	–	○	46
2,097,408 to 4,194,304	256	–	–	○	23

Note: 1. The setting range of the number of encoder output pulses (Pn212) depends on the resolution of the Servomotor encoder. An A.041 alarm (Encoder Output Pulse Setting Error) will occur if the above setting conditions are not met.
Correct setting example: Pn212 can be set to 25,000 [P/Rev].
Incorrect setting example: Pn212 cannot be set to 25,001 (P/Rev) because the setting increment in the above table is not used.

2. The upper limit of the pulse frequency is approximately 1.6 Mpps. The Servomotor speed will be limited if the setting of the number of encoder output pulses is too high.
An A.511 alarm (Encoder Output Pulse Overspeed) will occur if the upper limit of the motor speed is exceeded.

Output example: An output example is given below for the PAO (Encoder Pulse Output Phase A) signal and the PBO (Encoder Pulse Output Phase B) signal when Pn212 is set to 16 (16 pulses output per revolution).

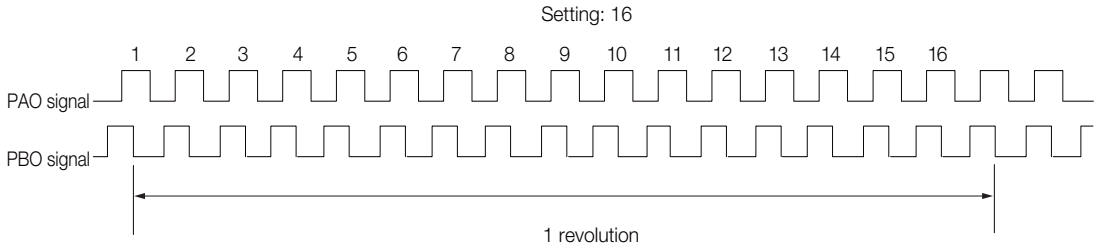

Encoder Divided Pulse Output When Using a Linear Servomotor

If you will use a Linear Servomotor, set the encoder output resolution (Pn281).

Pn281	Encoder Output Resolution			Speed Position Force	
	Setting Range	Setting Unit	Default Setting	When Enabled	Classification
	1 to 4,096	1 edge/pitch	20	After restart	Setup

Note: The maximum setting for the encoder output resolution is 4,096. Pulse output at a linear encoder resolution of 4,096 or higher is not possible.

Set the encoder output resolution for the encoder pulse output signals (PAO, /PAO, PBO, and /PBO) from the SERVOPACK to the host controller.

The number of feedback pulses per linear encoder pitch is divided by the setting of Pn281 (after multiplication by 4) inside the SERVOPACK and then the resulting number of pulses is output. Set the parameter according to the system specifications of the machine or host controller.

The setting range depends on the Servomotor's maximum speed (Pn385) and the linear scale pitch (Pn282).* You can calculate the upper limit of the setting of Pn281 with the following formula.

$$\text{Upper limit of Pn281} = \frac{\text{Linear Encoder Pitch*/100}}{\text{Pn385}} \times 72$$

* The value depends on whether a Serial Converter Unit is used.

Using a Serial Converter Unit	Setting of Pn282
Not Using a Serial Converter Unit (when the linear encoder and SERVOPACK are connected directly or when a linear encoder that does not require a Serial Converter Unit is used)	The linear encoder pitch is automatically detected by the SERVOPACK, so the setting of Pn282 is ignored. You can use the monitor functions of the SigmaWin+ to check the linear encoder pitch that was automatically detected.

Information

When the linear encoder pitch is 4 μm, the maximum motor speed is limited to 1 m/s because of the maximum response frequency of the Serial Converter Unit.
If the setting is out of range or does not satisfy the setting conditions, an A.041 alarm (Encoder Output Pulse Setting Error) will be output. If the motor speed exceeds the upper limit for the set encoder output resolution, an A.511 alarm (Encoder Output Pulse Overspeed) will be output.
The upper limit of the encoder output resolution is restricted by the dividing specifications of the Serial Converter Unit.

Example

Setting Example
Correct setting for a linear encoder pitch of 20 μm and a maximum motor speed of 5 m/s (Pn385 = 50): Pn281 = 28 (edges/pitch)
Incorrect setting: Pn281 = 29 (edges/pitch) (An A.041 alarm would be output.)

Example

Pulse Output Example
When Pn281 = 20 (20-edge output (5-pulse output) per linear encoder pitch)

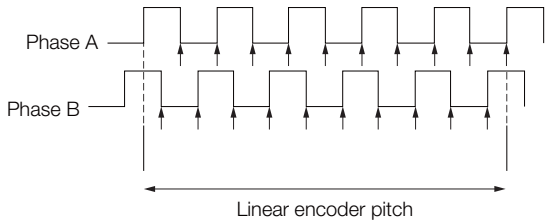

6.6 Software Limits

You can set limits in the software for machine movement that do not use the overtravel signals (P-OT and N-OT). If a software limit is exceeded, an emergency stop will be executed in the same way as it is for overtravel.
You must make the following settings to use the software limits.

- You must enable the software limit function.
- You must set the software limits.

6.6.1 Setting to Enable/Disable Software Limits

You can use Pn801= n.□□□X (Software Limit Selection) to enable and disable the software limit function. One of following commands must be executed to define the origin of the machine coordinate system before the software limits will operate. Otherwise, the software limit function will not operate even if a software limit is exceeded.

- The ZRET command has been executed.
- The POS_SET command has been executed with REFE set to 1.
- If an absolute encoder is used, the SENS_ON (Turn ON Sensor) command must have been completed.

Parameter		Meaning	When Enabled	Classification
Pn801	n.□□□0	Enable both forward and reverse software limits.	Immediately	Setup
	n.□□□1	Disable forward software limit.		
	n.□□□2	Disable reverse software limit.		
	n.□□□3 (default setting)	Disable both forward and reverse software limits.		

6.6.2 Setting the Software Limits

Software limits are set in both the forward and reverse directions.

The reverse software limit must be less than the forward software limit to set a limit in each direction.

Pn804	Forward Software Limit			Position	
	Setting Range	Setting Unit	Default Setting	When Enabled	Classification
	-1,073,741,823 to 1,073,741,823	1 reference unit	1,073,741,823	Immediately	Setup
Pn806	Reverse Software Limit			Position	
	Setting Range	Setting Unit	Default Setting	When Enabled	Classification
	-1,073,741,823 to 1,073,741,823	1 reference unit	-1,073,741,823	Immediately	Setup

6.6.3 Software Limit Check for References

You can enable or disable software limit checks for commands that have target position references, such as POSING or INTERPOLATE. If the target position exceeds a software limit, a deceleration stop will be performed from the position set as the software limit.

Parameter		Meaning	When Enabled	Classification
Pn801	n.□0□□ (default setting)	Do not perform software limit checks for references.	Immediately	Setup
	n.□1□□	Perform software limit checks for references.		

6.7 Selecting Torque Limits

You can limit the torque that is output by the Servomotor.

There are four different ways to limit the torque. These are described in the following table.

Limit Method	Outline	Control Method	Reference
Internal Torque Limits	The torque is always limited with the setting of a parameter.	Speed control, position control, or torque control	6.7.1
External Torque Limits	The torque is limited with an input signal from the host computer.		6.7.2
Limiting Torque with TLIM Data in Commands*	The TLIM data in a command is used to set the required torque limits.	Speed control or position control	–
Torque Limiting with P_CL and N_CL in the Servo Command Output Signals (SVCMD_IO)*	The P_CL and N_CL signals in the servo command output signals (SVCMD_IO) are used to set the required limits.	Speed control or position control	–

* Refer to the following manual for details.
Σ-7-Series MECHATROLINK-III Communications Standard Servo Profile Command Manual (Manual No.: SIEP S800001 31)

Note: If you set a value that exceeds the maximum torque of the Servomotor, the torque will be limited to the maximum torque of the Servomotor.

6.7.1 Internal Torque Limits

If you use internal torque limits, the maximum output torque will always be limited to the specified forward torque limit (Pn402) and reverse torque limit (Pn403).

- Rotary Servomotors

Pn402	Forward Torque Limit			Speed Position Torque	
	Setting Range	Setting Unit	Default Setting	When Enabled	Classification
	0 to 800	1%*	800	Immediately	Setup
Pn403	Reverse Torque Limit			Speed Position Torque	
	Setting Range	Setting Unit	Default Setting	When Enabled	Classification
	0 to 800	1%*	800	Immediately	Setup

* Set a percentage of the rated motor torque.

Note: If the setting of Pn402 or Pn403 is too low, the torque may be insufficient for acceleration or deceleration of the Servomotor.

Without Internal Torque Limits (Output to the maximum torque is possible.)	With Internal Torque Limits
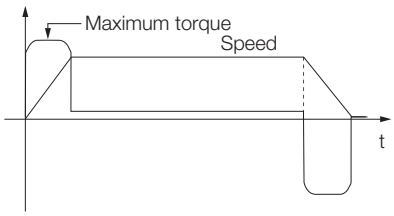	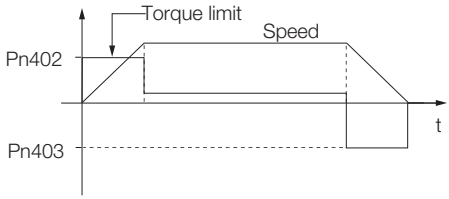

- Linear Servomotors

Pn483	Forward Force Limit			Speed Position Force	
	Setting Range	Setting Unit	Default Setting	When Enabled	Classification
	0 to 800	1%*	30	Immediately	Setup
Pn484	Reverse Force Limit			Speed Position Force	
	Setting Range	Setting Unit	Default Setting	When Enabled	Classification
	0 to 800	1%*	30	Immediately	Setup

* Set a percentage of the rated motor force.

Note: If the setting of Pn483 or Pn484 is too low, the force may be insufficient for acceleration or deceleration of the Servomotor.

Without Internal Torque Limits (Output to the maximum force is possible.)	With Internal Force Limits
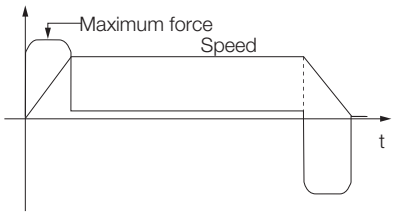	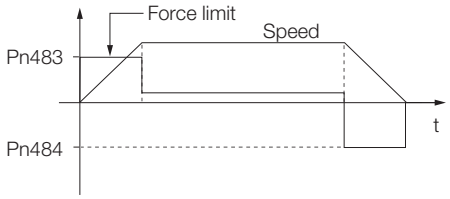

6.7.2 External Torque Limits

You can limit the torque only when required by the operating conditions of the machine by turning a signal ON and OFF.

You can use this for applications such as stopping on physical contact, or holding a workpiece with a robot.

External Torque Limit Reference Signals

The /P-CL (Forward External Torque Limit) and /N-CL (Reverse External Torque Limit) signals are used as the external torque limit reference signals. The /P-CL signal is used for the forward torque limit and the /N-CL signal is used for the reverse torque limit.

Type	Signal	Connector Pin No.	Signal Status	Meaning
Input	/P-CL	Must be allocated.	ON (closed)	Applies the forward external torque limit. The torque is limited to the smaller of the settings of Pn402*1 and Pn404.
			OFF (open)	Cancels the forward external torque limit. The torque is limited to the setting of Pn402*1.
Input	/N-CL	Must be allocated.	ON (closed)	Applies the reverse external torque limit. The torque is limited to the smaller of the settings of Pn403*2 and Pn404.
			OFF (open)	Cancels the reverse external torque limit. The torque is limited to the setting of Pn403*2.

*1. Pn483 is used for a Linear Servomotor.
*2. Pn484 is used for a Linear Servomotor.

Note: You must allocate the /P-CL and /N-CL signals to use them. You can use the following parameters to allocate the signal to a terminal.
- Pn50B = n.□X□□ (/P-CL (Forward External Torque Limit Input) Signal Allocation)
- Pn50B = n.X□□□ (/N-CL (Reverse External Torque Limit Input) Signal Allocation)

Refer to the following section for details.
☞ *6.1.1 Input Signal Allocations* on page 6-4

Setting the Torque Limits

The parameters that are related to setting the torque limits are given below.

- Rotary Servomotors
  If the setting of Pn402 (Forward Torque Limit), Pn403 (Reverse Torque Limit), Pn404 (Forward External Torque Limit), or Pn405 (Reverse External Torque Limit) is too low, the torque may be insufficient for acceleration or deceleration of the Servomotor.

Pn402	Forward Torque Limit			Speed Position Torque	
	Setting Range	Setting Unit	Default Setting	When Enabled	Classification
	0 to 800	1%*	800	Immediately	Setup
Pn403	Reverse Torque Limit			Speed Position Torque	
	Setting Range	Setting Unit	Default Setting	When Enabled	Classification
	0 to 800	1%*	800	Immediately	Setup
Pn404	Forward External Torque Limit			Speed Position Torque	
	Setting Range	Setting Unit	Default Setting	When Enabled	Classification
	0 to 800	1%*	100	Immediately	Setup
Pn405	Reverse External Torque Limit			Speed Position Torque	
	Setting Range	Setting Unit	Default Setting	When Enabled	Classification
	0 to 800	1%*	100	Immediately	Setup

* Set a percentage of the rated motor torque.

- Linear Servomotors
  If the setting of Pn483 (Forward Force Limit), Pn484 (Reverse Force Limit), Pn404 (Forward External Force Limit), or Pn405 (Reverse External Force Limit) is too low, the force may be insufficient for acceleration or deceleration of the Servomotor.

Pn483	Forward Force Limit			Speed Position Force	
	Setting Range	Setting Unit	Default Setting	When Enabled	Classification
	0 to 800	1%*	30	Immediately	Setup
Pn484	Reverse Force Limit			Speed Position Force	
	Setting Range	Setting Unit	Default Setting	When Enabled	Classification
	0 to 800	1%*	30	Immediately	Setup
Pn404	Forward External Force Limit			Speed Position Force	
	Setting Range	Setting Unit	Default Setting	When Enabled	Classification
	0 to 800	1%*	100	Immediately	Setup
Pn405	Reverse External Force Limit			Speed Position Force	
	Setting Range	Setting Unit	Default Setting	When Enabled	Classification
	0 to 800	1%*	100	Immediately	Setup

* Set a percentage of the rated motor force.

Changes in the Output Torque for External Torque Limits

The following table shows the changes in the output torque when the internal torque limit is set to 800%.

- Rotary Servomotors

In this example, the Servomotor direction is set to Pn000 = n.□□□0 (Use CCW as the forward direction).

		/P-CL signal	
		OFF	ON
/N-CL signal	OFF	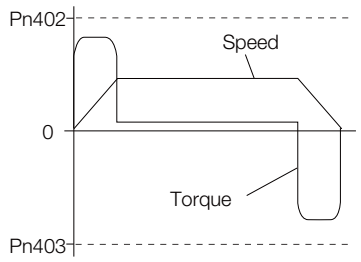	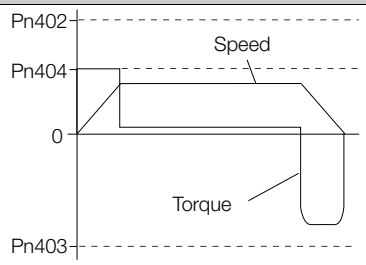
	ON	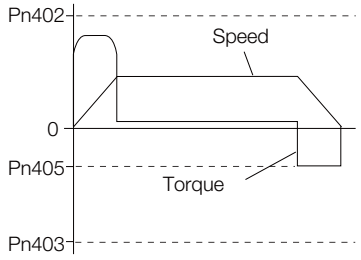	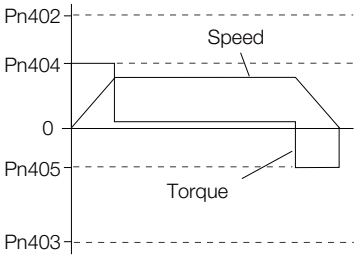

- Linear Servomotors

In this example, the Servomotor direction is set to Pn000 = n.□□□0 (Use the direction in which the linear encoder counts up as the forward direction).

		/P-CL signal	
		OFF	ON
/N-CL signal	OFF	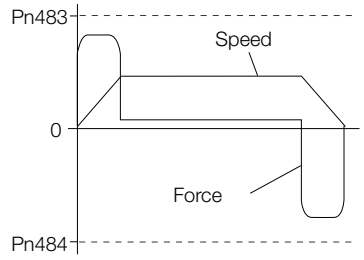	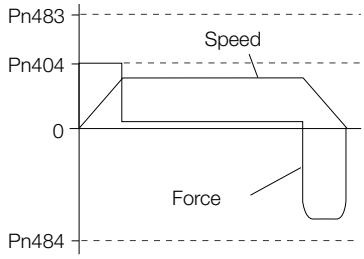
	ON	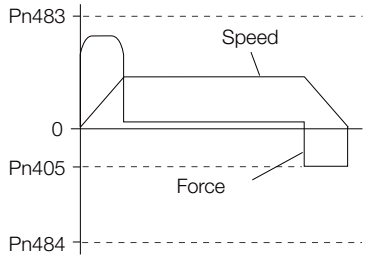	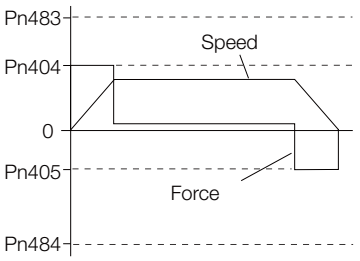

6.7.3 /CLT (Torque Limit Detection) Signal

This section describes the /CLT signal, which indicates the status of limiting the motor output torque.

Type	Signal	Connector Pin No.	Signal Status	Meaning
Output	/CLT	Must be allocated.	ON (closed)	The motor output torque is being limited.
			OFF (open)	The motor output torque is not being limited.

Note: You must allocate the /CLT signal to use it. Use Pn50F = n.□□□X (/CLT (Torque Limit Detection) Signal Allocation) to allocate the signal to a connector pin. Refer to the following section for details.
☞ *6.1.2 Output Signal Allocations* on page 6-5

6.8 Absolute Encoders

The absolute encoder records the current position of the stop position even when the power supply is OFF.

With a system that uses an absolute encoder, the host controller can monitor the current position. Therefore, it is not necessary to perform an origin return operation when the power supply to the system is turned ON.

There are four types of encoders for Rotary Servomotors. The usage of the encoder is specified in Pn002 = n.□X□□.

SERVOPACKs with software version 0023 or higher support batteryless absolute encoders.

Refer to the following section for encoder models.

☞ ■ *Encoder Resolution* on page 5-46

- Parameter Settings When Using an Incremental Encoder

Parameter		Meaning	When Enabled	Classification
Pn002	n.□0□□ (default setting)	Use the encoder as an incremental encoder. A battery is not required.	After restart	Setup
	n.□1□□	Use the encoder as an incremental encoder. A battery is not required.		
	n.□2□□	Use the encoder as a single-turn absolute encoder. A battery is not required.		

- Parameter Settings When Using a Single-Turn Absolute Encoder

Parameter		Meaning	When Enabled	Classification
Pn002	n.□0□□ (default setting)	Use the encoder as a single-turn absolute encoder. A battery is not required.	After restart	Setup
	n.□1□□	Use the encoder as an incremental encoder. A battery is not required.		
	n.□2□□	Use the encoder as a single-turn absolute encoder. A battery is not required.		

- Parameter Settings When Using a Multiturn Absolute Encoder

Parameter		Meaning	When Enabled	Classification
Pn002	n.□0□□ (default setting)	Use the encoder as a multiturn absolute encoder. A battery is required.	After restart	Setup
	n.□1□□	Use the encoder as an incremental encoder. A battery is not required.		
	n.□2□□	Use the encoder as a single-turn absolute encoder. A battery is not required.		

- Parameter Settings When Using a Batteryless Multiturn Absolute Encoder

Parameter		Meaning	When Enabled	Classification
Pn002	n.□0□□ (default setting)	Use the encoder as a batteryless multiturn absolute encoder. A battery is not required.	After restart	Setup
	n.□1□□	Use the encoder as an incremental encoder. A battery is not required.		
	n.□2□□	Use the encoder as a single-turn absolute encoder. A battery is not required.		

NOTICE

- **Install a battery at either the host controller or on the Encoder Cable.**
  If you install batteries both at the host controller and on the Encoder Cable at the same time, you will create a loop circuit between the batteries, resulting in a risk of damage or burning.

6.8.1 Connecting an Absolute Encoder

You can get the position data from the absolute encoder with MECHATROLINK communications. Therefore, it is not necessary to wire the PAO, PBO, and PCO (Encoder Divided Pulse Output) signals.

If they need to be wired, refer to the following section.

☞ *4.4.3 Wiring the SERVOPACK to the Encoder* on page 4-26
☞ *4.5.3 I/O Signal Wiring Examples* on page 4-37

6.8.2 Structure of the Position Data of the Absolute Encoder

The position data of the absolute encoder is the position coordinate from the origin of the absolute encoder.

The position data from the absolute encoder contains the following two items.

- The number of rotations from the origin of the encoder coordinate system (called the multiturn data)
- The position (number of pulses) within one rotation

The position data of the absolute encoder is as follows:

Position data of absolute encoder = Multiturn data × Number of pulses within one encoder rotation (setting of Pn212) + Position (number of pulses) within one rotation.

For a single-turn absolute encoder, the multiturn data is 0.

6.8.3 Output Ports for the Position Data from the Absolute Encoder

You can read the position data of the absolute encoder from the PAO, PBO, and PCO (Encoder Divided Pulse Output) signals.

The output method and timing for the position data of the absolute encoder are different in each case.

A conceptual diagram of the connections of the PAO, PBO, and PCO (Encoder Divided Pulse Output) signals to the host controller is provided below.

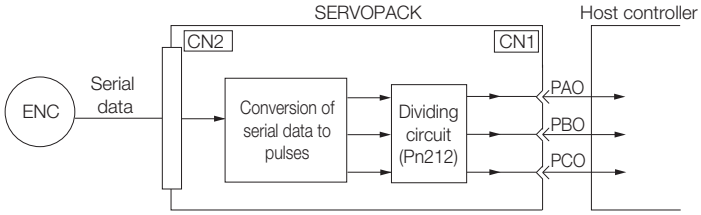

Signal	Status	Signal Contents
		When Using an Absolute Encoder
PAO	First signal	Multiturn data position within one rotation (pulse train)
	During normal operation	Incremental pulses
PBO	First signal	Position within one rotation (pulse train)
	During normal operation	Incremental pulses
PCO	Always	Origin pulse

The PAO (Encoder Divided Pulse Output) signal outputs the position data from the absolute encoder after the control power supply is turned ON. The SENS_ON (Turn ON Sensor) command is used to output the position data from the absolute encoder.

The position data of the absolute encoder is the current stop position. The absolute encoder outputs the multiturn data with the specified protocol. The absolute encoder outputs the position within one rotation as a pulse train. It then outputs pulses as an incremental encoder (incremental operation status).

The host controller must have a reception circuit (e.g., UART) for the position data from the absolute encoder. The pulse counter at the host controller will not count pulses when the multiturn data (communications message) is input because only phase A is input. Counting starts from the position of the absolute encoder within one rotation.

The output circuits for the PAO, PBO, and PCO signals use line drivers. Refer to the following section for details on line drivers.

☞ *4.5.4 I/O Circuits* on page 4-39

6.8.4 Reading the Position Data from the Absolute Encoder

The SENS_ON (Turn ON Sensor) command is used to read the position data from the absolute encoder.

The sequence for using the SENS_ON command to read the position data from the absolute encoder of a Rotary Servomotor is given below.

The multiturn data is sent according to the transmission specifications.

The position of the absolute encoder within one rotation is output as a pulse train.

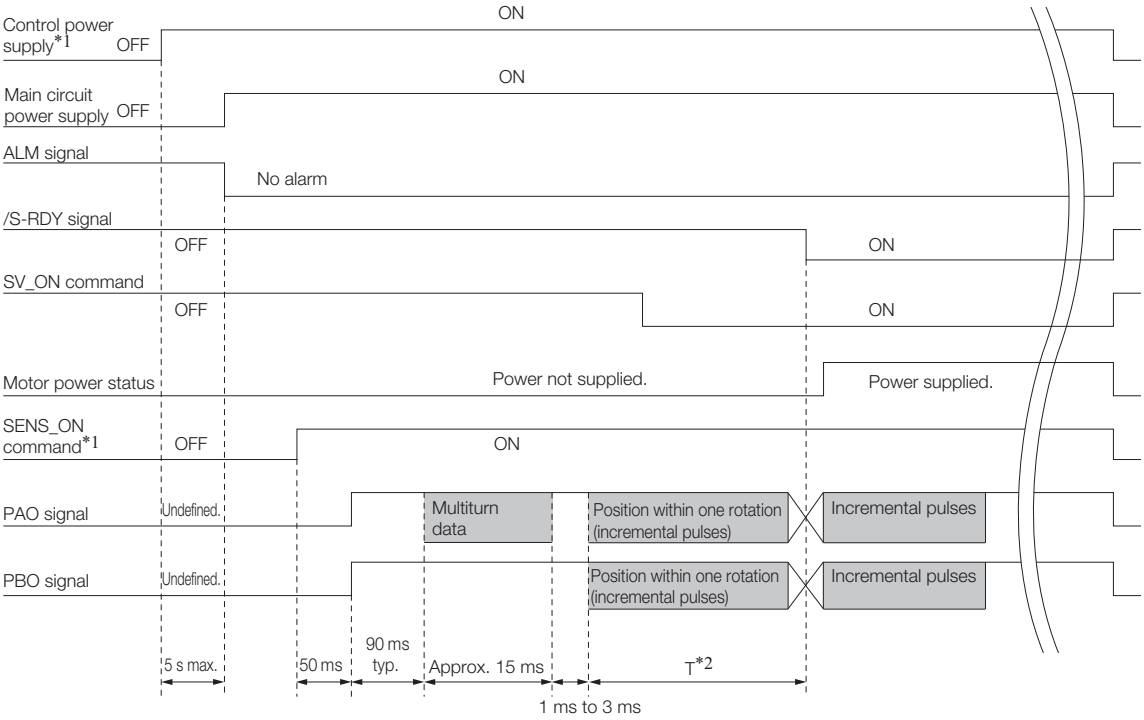

*1. When you turn OFF the control power supply, input the SENS_OFF command.

*2. The pulse output time T for the position of the absolute encoder within one rotation depends on the setting of Pn212 (Number of Encoder Output Pulses). Refer to the following table.

Setting of Pn212	Calculation of the Pulse Output Speed for the Position of the Absolute Encoder within One Rotation	Calculation of the Pulse Output Time T for the Position of the Absolute Encoder within One Rotation
16 to 16,384	680 × Pn212/16,384 [kpps]	25 ms max.
16,386 to 32,768	680 × Pn212/32,768 [kpps]	50 ms max.
32,722 to 65,536	680 × Pn212/65,536 [kpps]	100 ms max.
65,544 to 131,072	680 × Pn212/131,072 [kpps]	200 ms max.
131,088 to 262,144	680 × Pn212/262,144 [kpps]	400 ms max.
262,176 to 524,288	680 × Pn212/524,288 [kpps]	800 ms max.
524,352 to 1,048,576	680 × Pn212/1,048,576 [kpps]	1,600 ms max.
1,048,704 to 2,097,152	680 × Pn212/2,097,152 [kpps]	3,200 ms max.
2,097,408 to 4,194,304	680 × Pn212/4194304 [kpps]	6,400 ms max.

6.8.5 Transmission Specifications

The position data transmission specifications for the PAO (Encoder Divided Pulse Output) signal are given in the following table.

The PAO signal sends only the multiturn data.

Refer to the following section for the timing of sending the position data from the absolute encoder.

☞ *6.8.4 Reading the Position Data from the Absolute Encoder* on page 6-36

Item	PAO signal
Synchronization Method	Start-stop synchronization (ASYNC)
Baud Rate	9,600 bps
Start Bits	1 bit
Stop Bits	1 bit
Parity	Even
Character Code	ASCII, 7 bits
Data Format	Refer to *Data Format of PAO Signal*.
Data Output Period	Each time the SENS_ON command is input after the control power supply is turned ON

Data Format of PAO Signal

As shown below, the message format consists of eight characters: “P,” the sign, the 5-digit multiturn data, and “CR” (which indicates the end of the message).

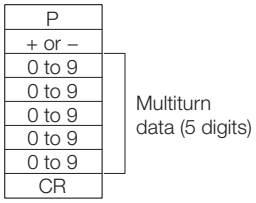

6.8.6 Calculating the Current Position in Machine Coordinates

When you reset the absolute encoder, the reset position becomes the reference position.

The host controller reads the coordinate Ps from the origin of the encoder coordinate system. The host controller must record the value of coordinate Ps.

This section describes the reference position in the machine coordinate system.

The method to calculate the coordinate value of the present position from the origin of the machine coordinate system is given below.

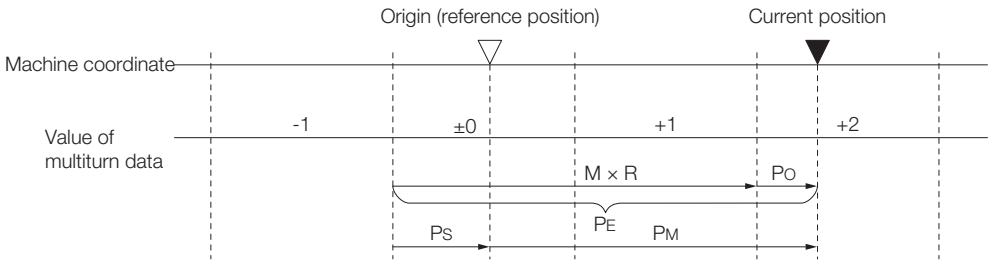

The current position P_M in the machine coordinate system is calculated as follows:

$P_M = P_E - P_S$

$P_E = M \times R + P_O$

$P_S = M_S \times R + P_S'$

Symbol	Meaning
P_E	Position data for the current position of the absolute encoder
M	Current position of the multiturn data of the absolute encoder
P_O	Position of the current position within one rotation
P_S	Position data of the absolute encoder when absolute encoder was reset
M_S	Multiturn data of the absolute encoder when absolute encoder was reset
P_S'	Position of the absolute encoder within one rotation when absolute encoder was reset
P_M	Current position in machine coordinate system
R	Pulses output per encoder rotation (value after dividing; setting of Pn212)

Note: The following formulas apply in reverse rotation mode (Pn000 = n.□□□1).

$P_M = P_E - P_S$

$P_E = -M \times R + P_O$

$P_S = M_S \times R + P_S'$

Information

1. If you are using a Rotary Servomotor, you must reset the absolute encoder. Refer to the following section for information on resetting the absolute encoder.
   ☞ *5.16 Resetting the Absolute Encoder* on page 5-50
2. You can set the origin to a different position from the reset position. Refer to the following section for information on the origin position offset.
   ☞ *5.17 Setting the Origin of the Absolute Encoder* on page 5-53

6.8.7 Alarm Output from Output Ports for the Position Data from the Absolute Encoder

Any alarm detected by the SERVOPACK is transmitted as alarm information to the host controller with the PAO (Encoder Divided Pulse Output) signal when the SENS_ON (Turn ON Sensor) command turns OFF.

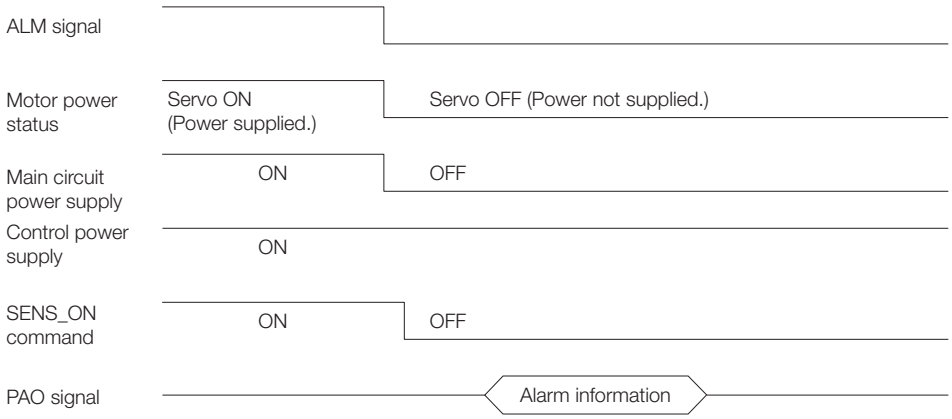

The data format of the alarm information is shown below.

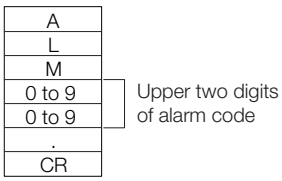

6.8.8 Multiturn Limit Setting

The multiturn limit is used in position control for a turntable or other rotating body.
For example, consider a machine that moves the turntable shown in the following diagram in only one direction.

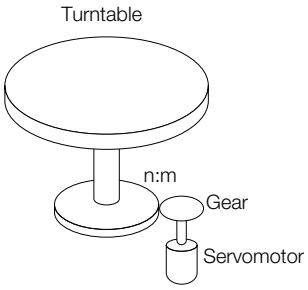

Because the turntable moves in only one direction, the upper limit to the number of rotations that can be counted by an absolute encoder will eventually be exceeded.
The multiturn limit is used in cases like this to prevent fractions from being produced by the integer ratio of the number of Servomotor rotations and the number of turntable rotations.

For a machine with a ratio of n:m between the number of Servomotor rotations and the number of turntable rotations, as shown above, the value of m minus 1 will be the setting for the multiturn limit setting (Pn205).

Multiturn limit (Pn205) = m - 1

If m = 100 and n = 3 (i.e., the turntable rotates three times for each 100 Servomotor rotations), the relationship between the number of Servomotor rotations and the number of turntable rotations would be as shown below.

Set Pn205 to 99.
Pn205 = 100 - 1 = 99

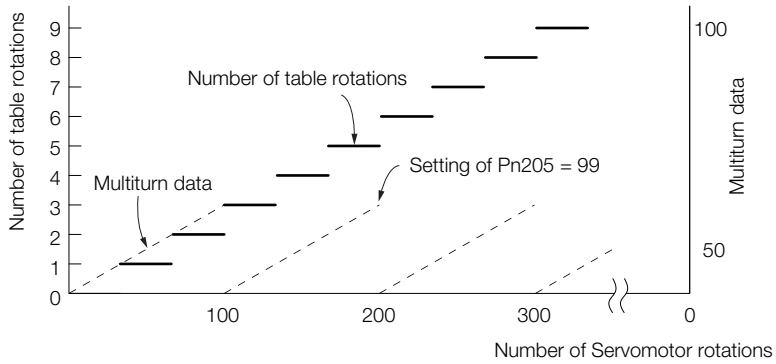

Pn205	Multiturn Limit			Speed Position Torque	
	Setting Range	Setting Unit	Default Setting	When Enabled	Classification
	0 to 65,535	1 Rev	65,535	After restart	Setup

Note: This parameter is enabled when you use an absolute encoder.

The data will change as shown below when this parameter is set to anything other than the default setting.

- If the Servomotor operates in the reverse direction when the multiturn data is 0, the multiturn data will change to the value set in Pn205.
- If the motor operates in the forward direction when the multiturn data is at the value set in Pn205, the multiturn data will change to 0.

Set Pn205 to one less than the desired multiturn data.

If you change the multiturn limit in Pn205, an A.CC0 alarm (Multiturn Limit Disagreement) will be displayed because the setting disagrees with the value in the encoder. Refer to the following section for the procedure to change the multiturn limit settings in the encoder.

☞ *6.8.9 Multiturn Limit Disagreement Alarm (A.CC0)* on page 6-40

Default Setting	Not Default Setting
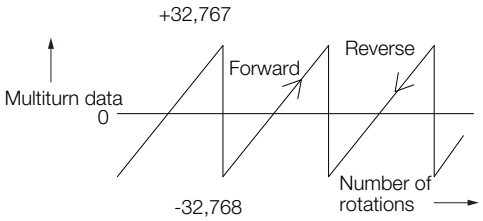	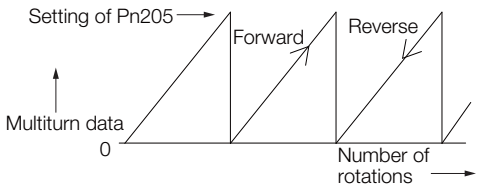

Information The multiturn data will always be 0 in the following cases. It is not necessary to reset the absolute encoder in these cases.
- When you use a single-turn absolute encoder
- When the encoder is set to be used as a single-turn absolute encoder (Pn002 = n.□2□□)

Absolute encoder-related alarms (A.810 and A.820) will not occur.

6.8.9 Multiturn Limit Disagreement Alarm (A.CC0)

If you change the multiturn limit in Pn205 (Multiturn Limit), an A.CC0 alarm (Multiturn Limit Disagreement) will be displayed because the setting disagrees with the value in the encoder.

Display	Name	Meaning
A.CC0	Multiturn Limit Disagreement	Different multiturn limits are set in the encoder and SERVOPACK.

If this alarm is displayed, use the following procedure to change the multiturn limit in the encoder to the same value as the setting of Pn205.

Applicable Tools

The following table lists the tools that you can use to set the multiturn limit and the applicable tool functions.

Tool	Function	Operating Procedure Reference
Digital Operator	Fn013	Σ-7-Series Digital Operator Operating Manual (Manual No.: SIEP S800001 33)
SigmaWin+	***Encoder Setting - Multi-turn Limit Setup***	*Operating Procedure* on page 6-40

This setting can be made with the MEM_WR (Write Memory) command. Refer to the following manual for information on the MEM_WR (Write Memory) command.

Σ-7-Series MECHATROLINK-III Communications Standard Servo Profile Command Manual (Manual No.: SIEP S800001 31)

Operating Procedure

Use the following procedure to adjust the multiturn limit setting.

1. Click the Servo Drive Button in the workspace of the Main Window of the SigmaWin+.
2. Select **Multiturn Limit Setting** in the Menu Dialog Box.
   The Multiturn Limit Setting Dialog Box will be displayed.

3. Click the **Continue** Button.

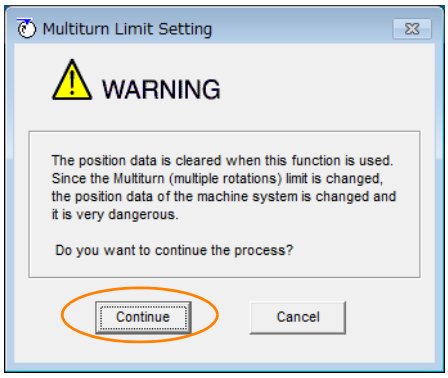

Click the **Cancel** Button to cancel setting the multiturn limit.
The Main Window will return.

4. Change the setting.

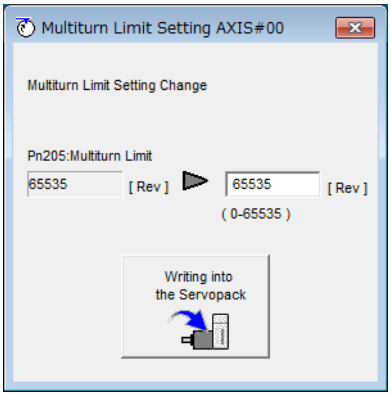

5. Click the **Writing into the Servopack** Button.

6. Click the **OK** Button.

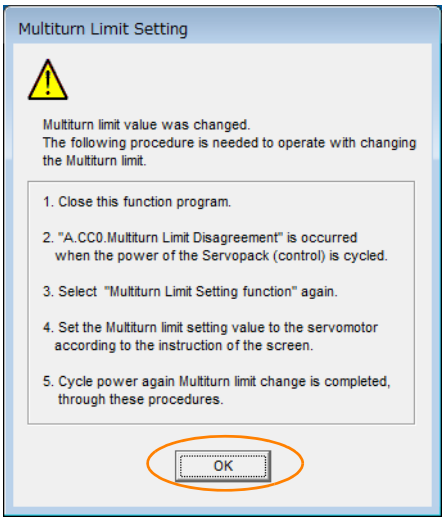

7. Turn the power supply to the SERVOPACK OFF and ON again.
An A.CC0 alarm (Multiturn Limit Disagreement) will occur because setting the multiturn limit in the Servomotor is not yet completed even though the setting has been changed in the SERVOPACK.

8. Display the Multiturn Limit Setting in the Menu Dialog Box.

9. Click the **Continue** Button.

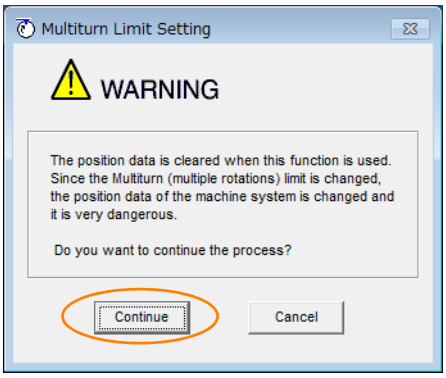

10. Click the **Writing into the servomotor** Button.

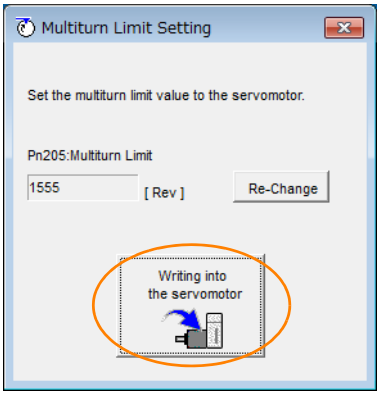

Click the **Re-change** Button to change the setting.

11. Click the **OK** Button.

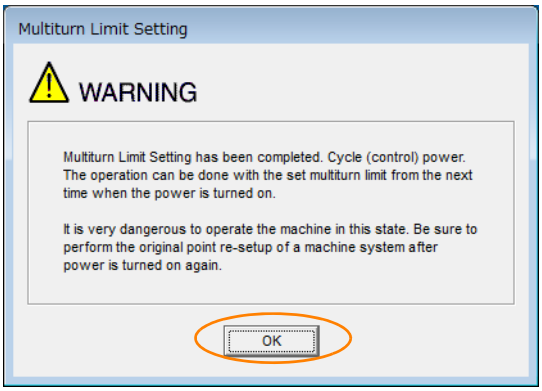

This concludes the procedure to set the multiturn limit.

6.9 Absolute Linear Encoders

The absolute linear encoder records the current position of the stop position even when the power supply is OFF.

With a system that uses an absolute linear encoder, the host controller can monitor the current position. Therefore, it is not necessary to perform an origin return operation when the power supply to the system is turned ON.

There are three types of linear encoders for Linear Servomotors. The usage of the linear encoder is specified in Pn002 = n.□X□□.

Refer to the following section for linear encoder models.

☞ ■ *Feedback Resolution of Linear Encoder* on page 5-47

- Parameter Settings When Using an Incremental Linear Encoder

Parameter		Meaning	When Enabled	Classification
Pn002	n.□0□□ (default setting)	Use the encoder as an incremental linear encoder.	After restart	Setup
	n.□1□□	Use the encoder as an incremental linear encoder.		

- Parameter Settings When Using an Absolute Linear Encoder

Parameter		Meaning	When Enabled	Classification
Pn002	n.□0□□ (default setting)	Use the encoder as an absolute linear encoder.	After restart	Setup
	n.□1□□	Use the encoder as an incremental linear encoder.		

6.9.1 Connecting an Absolute Linear Encoder

You can get the position data from the absolute linear encoder with MECHATROLINK communications. Therefore, it is not necessary to wire the PAO, PBO, and PCO (Encoder Divided Pulse Output) signals.

If they need to be wired, refer to the following section.

☞ *4.4.3 Wiring the SERVOPACK to the Encoder* on page 4-26
☞ *4.5.3 I/O Signal Wiring Examples* on page 4-37

6.9.2 Structure of the Position Data of the Absolute Linear Encoder

The position data of the absolute linear encoder is the distance (number of pulses) from the origin of the absolute linear encoder.

The position data is signed 36-bit data.

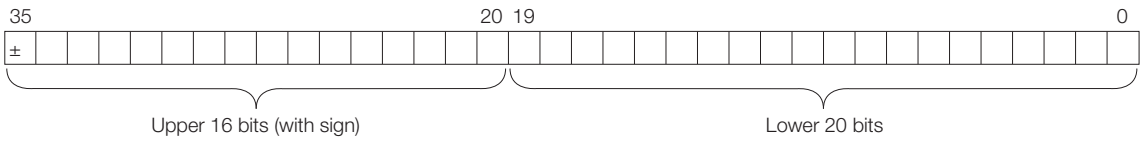

When the SERVOPACK sends the position data, it sends the upper 16-bit data (with sign) separately from the lower 20-bit data.

6.9.3 Output Ports for the Position Data from the Absolute Linear Encoder

You can read the position data of the absolute linear encoder from the PAO, PBO, and PCO (Encoder Divided Pulse Output) signals.

The output method and timing for the position data of the absolute linear encoder are different in each case.

A conceptual diagram of the connections of the PAO, PBO, and PCO (Encoder Divided Pulse Output) ports to the host controller is provided below.

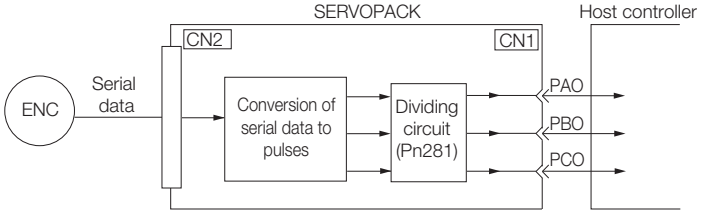

Signal	Status	Signal Contents
		When Using an Absolute Linear Encoder
PAO	First signal	Upper 16-bit data (with sign) Lower 20-bit data (pulse train)
	During normal operation	Incremental pulses
PBO	First signal	Lower 20-bit data (pulse train)
	During normal operation	Incremental pulses
PCO	Always	Origin pulse

The PAO (Encoder Divided Pulse Output) signal outputs the position data from the absolute linear encoder after the control power supply is turned ON. The SENS_ON (Turn ON Sensor) command is used to output the position data from the absolute linear encoder.

The position data of the absolute linear encoder is the current stop position. The absolute linear encoder outputs the upper 16-bit data (with sign) according to the specified protocol. The absolute encoder outputs the lower 20-bit data as a pulse train. It then outputs pulses as an incremental linear encoder (incremental operation status).

The host controller must have a reception circuit (e.g., UART) for the position data from the absolute linear encoder. The pulse counter at the host controller will not count pulses when the upper 16-bit data (with sign) (communications message) is input because only phase A is input.

The output circuits for the PAO, PBO, and PCO signals use line drivers. Refer to the following section for details on line drivers.

☞ *4.5.4 I/O Circuits* on page 4-39

6.9.4 Reading the Position Data from the Absolute Linear Encoder

The SENS_ON (Turn ON Sensor) command is used to read the position data from the absolute linear encoder.

The sequence for using the SENS_ON command to read the position data from the absolute linear encoder of a Linear Servomotor is given below.

The upper 16-bit position data (with sign) are sent according to the transmission specifications.

The lower 20-bit data is output as a pulse train.

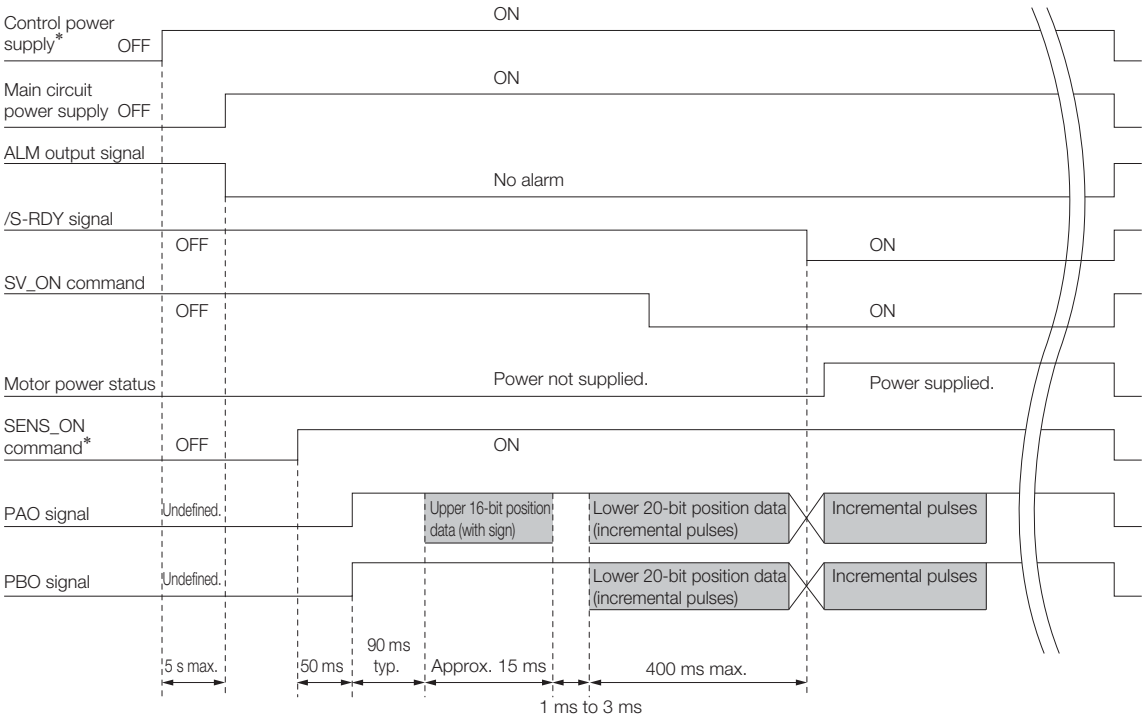

* When you turn OFF the control power supply, input the SENS_OFF command.

6.9.5 Transmission Specifications

The position data transmission specifications for the PAO (Encoder Divided Pulse Output) signal are given in the following table.

The PAO signal sends only the 16-bit data (with sign).

Refer to the following section for the timing of sending the position data from the absolute encoder.

☞ *6.9.4 Reading the Position Data from the Absolute Linear Encoder* on page 6-44

Item	PAO signal
Synchronization Method	Start-stop synchronization (ASYNC)
Baud Rate	9,600 bps
Start Bits	1 bit
Stop Bits	1 bit
Parity	Even
Character Code	ASCII, 7 bits
Data Format	Refer to *Data Format of PAO Signal*.
Data Output Period	Each time the SENS_ON command is input after the control power supply is turned ON

Data Format of PAO Signal

As shown below, the message format consists of eight characters: “P,” the sign, the 5-digit upper 15-bit position data, and “CR” (which indicates the end of the message).

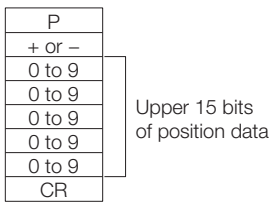

6.9.6 Calculating the Current Position in Machine Coordinates

With an absolute linear encoder, you must set the position of the origin (i.e., the origin of the machine coordinate system).

The host controller reads the coordinate from the origin of the encoder coordinate system. The host controller must record the value of this coordinate.

The method to calculate the coordinate value of the present position from the origin of the machine coordinate system is given below.

The position data from the absolute linear encoder is signed 36-bit data, but the upper 16 bits (with sign) and the lower 20 bits are output separately.

For the upper 16-bit data (with sign), the upper bits (16 bits, including the sign) of the current position after dividing by the setting of Pn281 are output with serial communications according to the transmission specifications.

For the lower 20-bit data, the lower bits (20 bits) of the current position after dividing by the setting of Pn281 are output as a pulse train.

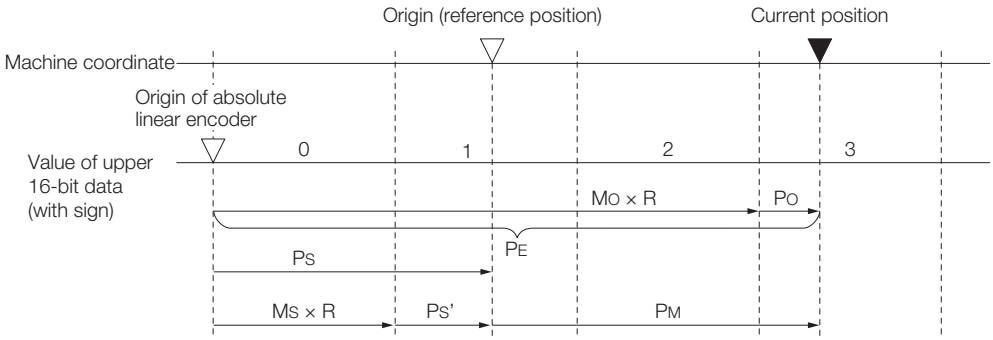

The current position P_M in the machine coordinate system is calculated as follows:

$P_M = P_E - P_S$

$P_E = M_O \times R + P_O$

$P_S = M_S \times R + P_S'$

Symbol	Meaning
P_E	Position data for the current position of the absolute linear encoder
M_O	Upper 16 bits (with sign) of the position data for the current position of the absolute linear encoder
P_O	Lower 20 bits of the position data for the current position of the absolute linear encoder
P_S	Position data of the origin
M_S	Upper 16 bits (with sign) of the position data of the origin
P_S'	Lower 20 bits of the position data of the origin
P_M	Current position in machine coordinate system
R	1048576 ($=2^{20}$)

Note: The above formulas also apply in reverse movement mode (Pn000 = n.□□□1).

Information: If you are using a Linear Servomotor, you do not need to reset the absolute linear encoder to define the origin. (Some absolute linear encoders also allow you to set any position as the origin.)

6.9.7 Alarm Output from the Output Ports for the Position Data from the Absolute Linear Encoder

Any alarm detected by the SERVOPACK is transmitted as alarm information to the host controller with the PAO (Encoder Divided Pulse Output) signal when the SENS_ON (Turn ON Sensor) command turns OFF.

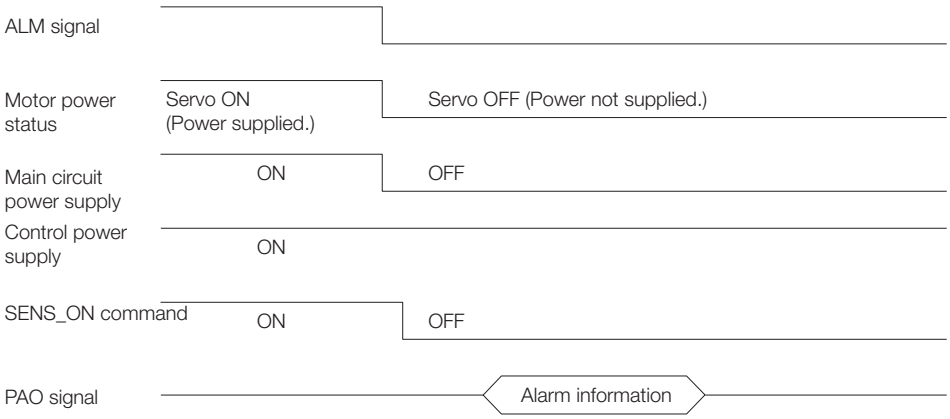

The data format of the alarm information is shown below.

A	
L	
M	
0 to 9	Upper two digits of alarm code
0 to 9	
.	
CR	

6.10 Software Reset

You can reset the SERVOPACK internally with the software. A software reset is used when resetting alarms and changing the settings of parameters that normally require turning the power supply to the SERVOPACK OFF and ON again. This can be used to change those parameters without turning the power supply to the SERVOPACK OFF and ON again.

Information

1. Always confirm that the servo is OFF and that the Servomotor is stopped before you start a software reset.
2. This function resets the SERVOPACK independently of the host controller. The SERVOPACK carries out the same processing as when the power supply is turned ON and outputs the ALM (Servo Alarm) signal. The status of other output signals may be forcibly changed.
3. When you execute a software reset, the SERVOPACK will not respond for approximately five seconds.
   Before you execute a software reset, check the status of the SERVOPACK and Servomotor and make sure that no problems will occur.

6.10.1 Preparations

Always check the following before you perform a software reset.

- The servo must be OFF.
- The motor must be stopped.

6.10.2 Applicable Tools

The following table lists the tools that you can use to perform a software reset and the applicable tool functions.

Tool	Function	Operating Procedure Reference
Digital Operator	Fn030	Σ-7-Series Digital Operator Operating Manual (Manual No.: SIEP S800001 33)
SigmaWin+	***Basic Functions - Software Reset***	*6.10.3 Operating Procedure* on page 6-48

6.10.3 Operating Procedure

There are the following two methods that you can use to perform a software reset.

- Direct connection to the SERVOPACK
- Connection through a controller

The procedure for each method is given below.

Direct Connection to the SERVOPACK

1. Click the Servo Drive Button in the workspace of the Main Window of the SigmaWin+.

2. Select **Software Reset** in the Menu Dialog Box.
   The Software Reset Dialog Box will be displayed.

3. Click the **Execute** Button.

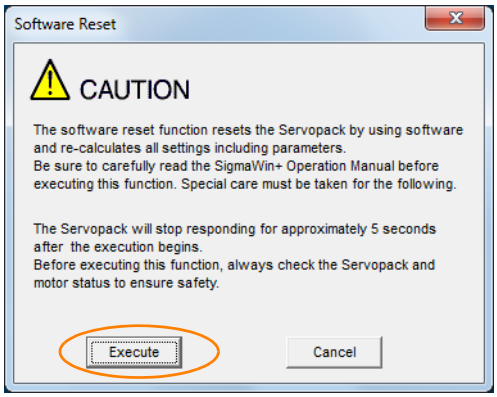

   Click the **Cancel** Button to cancel the software reset. The Main Window will return.

4. Click the **Execute** Button.

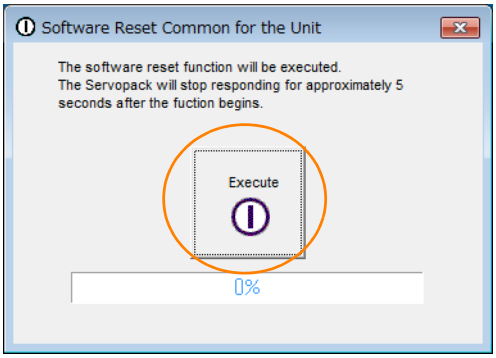

5. Click the **OK** Button to end the software reset operation.
   All settings including parameters will have been re-calculated. When you finish this operation, disconnect the SigmaWin+ from the SERVOPACK, and then connect it again.

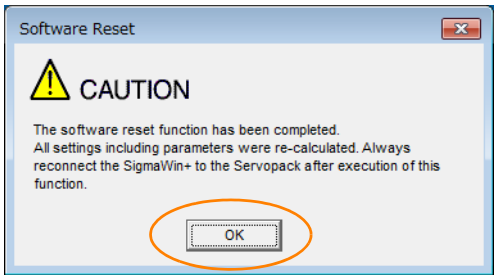

This concludes the procedure to reset the software.

Connection through a Controller

1. Click the Servo Drive Button in the workspace of the Main Window of the SigmaWin+.

2. Select **Software Reset** in the Menu Dialog Box.
   The Software Reset Dialog Box will be displayed.

3. Click the **Execute** Button.

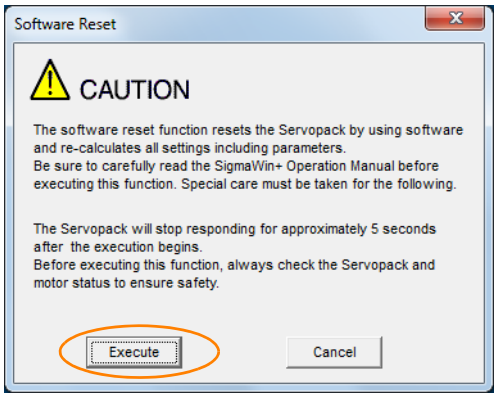

   Click the **Cancel** Button to cancel the software reset. The Main Window will return.

4. Select the **Reset MECHATROLINK communication** Check Box.

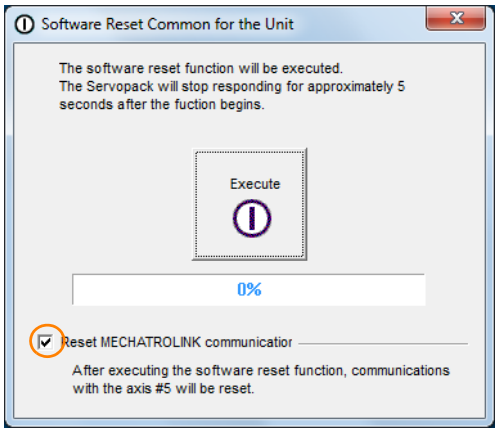

5. Click the **Execute** Button.

> **Important**
> If you perform a software reset without resetting MECHATROLINK communications, a communications error will occur between the controller and SERVOPACK, and communications will no longer be possible.
> Always select the **Reset MECHATROLINK communication** Check Box and reset MECHATROLINK communications as well.

6. Click the **OK** Button.
   All settings including parameters will have been re-calculated. When you finish this operation, disconnect the SigmaWin+ from the SERVOPACK, and then connect it again.

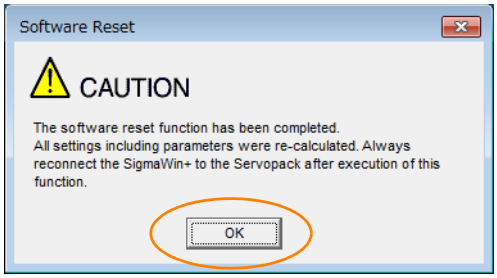

This concludes the procedure to reset the software.

6.11 Initializing the Vibration Detection Level

You can detect machine vibration during operation to automatically adjust the settings of Pn312 or Pn384 (Vibration Detection Level) to detect A.520 alarms (Vibration Alarm) and A.911 warnings (Vibration Warning) more precisely.

This function detects specific vibration components in the Servomotor speed.

Parameter		Meaning	When Enabled	Classification
Pn310	n.□□□0 (default setting)	Do not detect vibration.	Immediately	Setup
	n.□□□1	Output a warning (A.911) if vibration is detected.		
	n.□□□2	Output an alarm (A.520) if vibration is detected.		

If the vibration exceeds the detection level calculated with the following formula, an alarm or warning occurs according to Pn310 (Vibration Detection Selection).

- Rotary Servomotors

$$\text{Detection level} = \frac{\text{Vibration detection level (Pn312 [min-1])} \times \text{Vibration detection sensitivity (Pn311 [\%])}}{100}$$

- Linear Servomotors

$$\text{Detection level} = \frac{\text{Vibration detection level (Pn384 [mm/s])} \times \text{Vibration detection sensitivity (Pn311 [\%])}}{100}$$

Use this function only if A.520 or A.911 alarms are not output at the correct times when vibration is detected with the default vibration detection level (Pn312 or Pn384).

There will be discrepancies in the detection sensitivity for vibration alarms and warnings depending on the condition of your machine. If there is a discrepancy, use the above formula to adjust Pn311 (Vibration Detection Sensitivity).

Pn311	Vibration Detection Sensitivity			Speed Position Torque	
	Setting Range	Setting Unit	Default Setting	When Enabled	Classification
	50 to 500	1%	100	Immediately	Tuning

Information

1. Vibration may not be detected because of unsuitable servo gains. Also, not all kinds of vibrations can be detected.
2. Set a suitable moment of inertia ratio (Pn103). An unsuitable setting may result in falsely detecting or not detecting vibration alarms or vibration warnings.
3. To use this function, you must input the actual references that will be used to operate your system.
4. Execute this function under the operating conditions for which you want to set the vibration detection level.
5. Execute this function while the Servomotor is operating at 10% of its maximum speed or faster.

6.11.1 Preparations

Always check the following before you initialize the vibration detection level.

- The parameters must not be write prohibited.
- The test without a motor function must be disabled (Pn00C = n.□□□0).

6.11.2 Applicable Tools

The following table lists the tools that you can use to initialize the vibration detection level and the applicable tool functions.

Tool	Function	Operating Procedure Reference
Digital Operator	Fn01B	Σ-7-Series Digital Operator Operating Manual (Manual No.: SIEP S800001 33)
SigmaWin+	***Others - Initialize Vibration Detection Level***	*6.11.3 Operating Procedure* on page 6-52

6.11.3 Operating Procedure

Use the following procedure to initialize the vibration detection level.

1. Click the Servo Drive Button in the workspace of the Main Window of the SigmaWin+.
2. Select **Initialize Vibration Detection Level** in the Menu Dialog Box.
   The Initialize Vibration Detection Level Dialog Box will be displayed.
3. Select **Pn311: Vibration Detection Sensitivity** and **Pn310: Vibration Detection Selections** and then click the **Detection Start** Button.
   A setting execution standby mode will be entered.

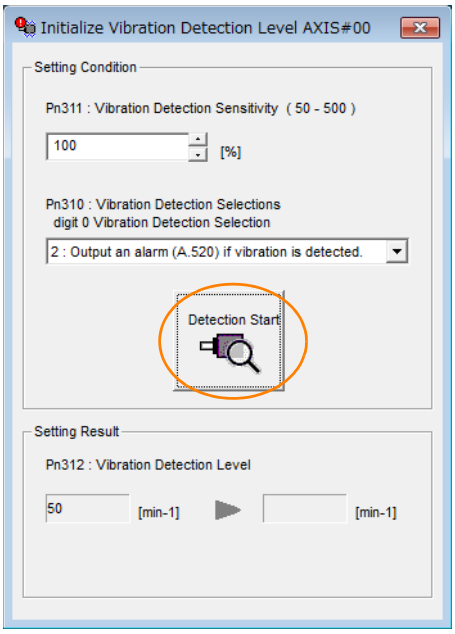

4. Click the **Execute** Button.

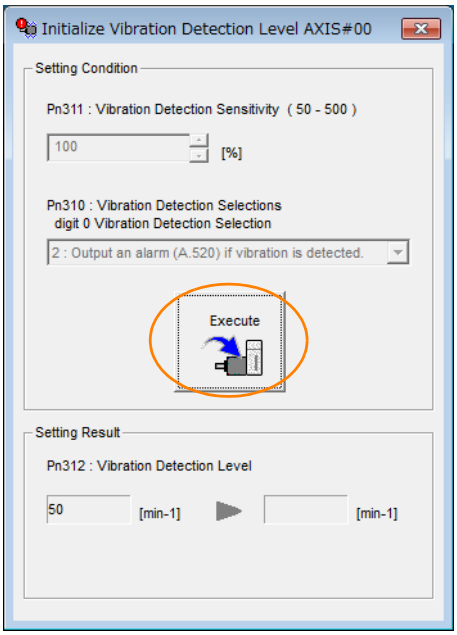

The newly set vibration detection level will be displayed and the value will be saved in the SERVO-PACK.

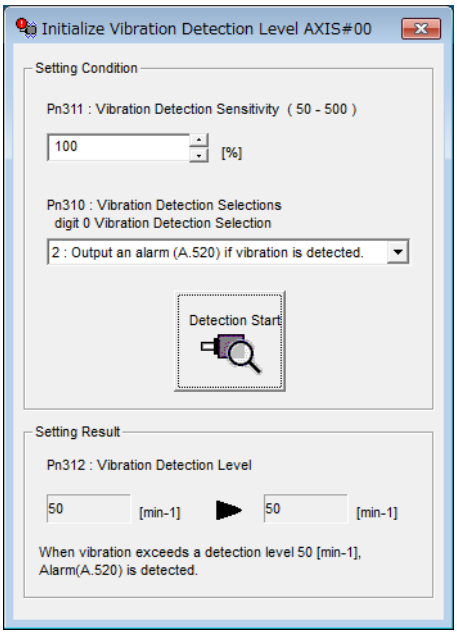

This concludes the procedure to initialize the vibration detection level.

6.11.4 Related Parameters

The following three items are given in the following table.

- Parameters Related to this Function
  These are the parameters that are used or referenced when this function is executed.
- Changes during Function Execution
  Not allowed: The parameter cannot be changed using the SigmaWin+ or other tool while this function is being executed.
  Allowed: The parameter can be changed using the SigmaWin+ or other tool while this function is being executed.
- Automatic Changes after Function Execution
  Yes: The parameter is automatically set or adjusted after execution of this function.
  No: The parameter is not automatically set or adjusted after execution of this function.

Parameter	Name	Setting Changes	Automatic Changes
Pn311	Vibration Detection Sensitivity	Allowed	No
Pn312	Vibration Detection Level	Not allowed	Yes
Pn384	Vibration Detection Level	Not allowed	Yes

6.12 Adjusting the Motor Current Detection Signal Offset

The motor current detection signal offset is used to reduce ripple in the torque. You can adjust the motor current detection signal offset either automatically or manually.

6.12.1 Automatic Adjustment

Perform this adjustment only if highly accurate adjustment is required to reduce torque ripple. It is normally not necessary to adjust this offset.

Important

Execute the automatic offset adjustment if the torque ripple is too large when compared with other SERVOPACKs.

Information

The offset does not use a parameter, so it will not change even if the parameter settings are initialized.

Preparations

Always check the following before you automatically adjust the motor current detection signal offset.

- The parameters must not be write prohibited.
- The servo must be in ready status.
- The servo must be OFF.

Applicable Tools

The following table lists the tools that you can use to automatically adjust the offset and the applicable tool functions.

Tool	Function	Operating Procedure Reference
Digital Operator	Fn00E	Σ-7-Series Digital Operator Operating Manual (Manual No. SIEP S800001 33)
SigmaWin+	***Others - Adjust the Motor Current Detection Offset***	*Operating Procedure* on page 6-55

Operating Procedure

Use the following procedure to automatically adjust the motor current detection signal offset.

1. Click the Servo Drive Button in the workspace of the Main Window of the SigmaWin+.
2. Select **Adjust the Motor Current Detection Signal Offsets** in the Menu Dialog Box.
   The Adjust the Motor Current Detection Signal Offsets Dialog Box will be displayed.

3. Click the **Continue** Button.

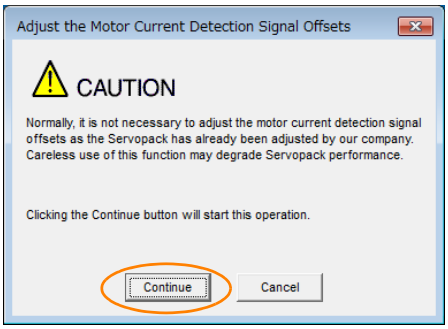

4. Click the **Automatic Adjustment** Tab in the Adjust the Motor Current Detection Signal Offsets Dialog Box.

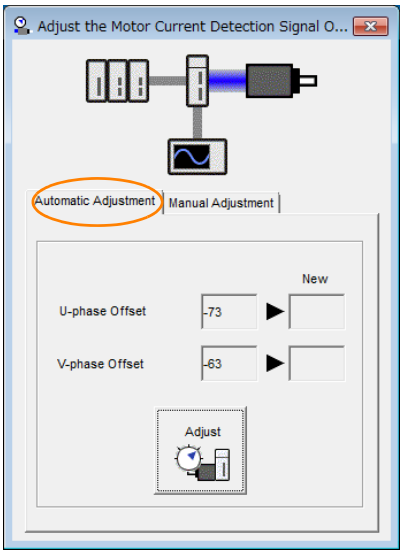

5. Click the **Adjust** Button.
The values that result from automatic adjustment will be displayed in the **New** Boxes.

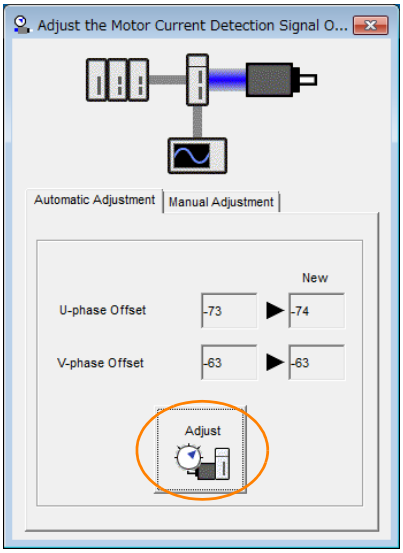

This concludes the procedure to automatically adjust the motor current detection signal offset.

6.12.2 Manual Adjustment

You can use this function if you automatically adjust the motor current detection signal offset and the torque ripple is still too large.

> **Important**
> If the offset is incorrectly adjusted with this function, the Servomotor characteristics may be adversely affected.
> Observe the following precautions when you manually adjust the offset.
> - Operate the Servomotor at a speed of approximately 100 min^{-1}.
> - Adjust the offset while monitoring the torque reference with the analog monitor until the ripple is minimized.
> - Adjust the offsets for the phase-U current and phase-V current of the Servomotor so that they are balanced. Alternately adjust both offsets several times.

Information The offset does not use a parameter, so it will not change even if the parameter settings are initialized.

Preparations

Always check the following before you manually adjust the motor current detection signal offset.

- The parameters must not be write prohibited.

Applicable Tools

The following table lists the tools that you can use to manually adjust the offset and the applicable tool functions.

Tool	Function	Operating Procedure Reference
Digital Operator	Fn00F	Σ-7-Series Digital Operator Operating Manual (Manual No.: SIEP S800001 33)
SigmaWin+	***Others - Adjust the Motor Current Detection Offset***	*Operating Procedure* on page 6-57

Operating Procedure

Use the following procedure to manually adjust the motor current detection signal offset.

1. Operate the Servomotor at approximately 100 min^{-1}.
2. Click the Servo Drive Button in the workspace of the Main Window of the SigmaWin+.
3. Select **Adjust the Motor Current Detection Signal Offsets** in the Menu Dialog Box.
   The Adjust the Motor Current Detection Signal Offsets Dialog Box will be displayed.
4. Click the **Continue** Button.

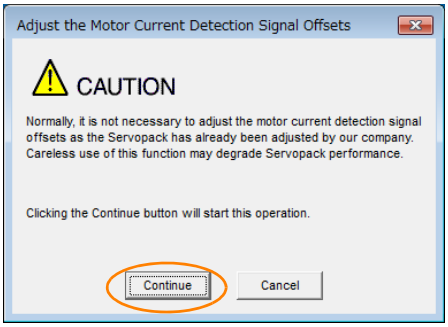

5. Click the **Manual Adjustment** Tab in the Adjust the Motor Current Detection Signal Offsets Dialog Box.

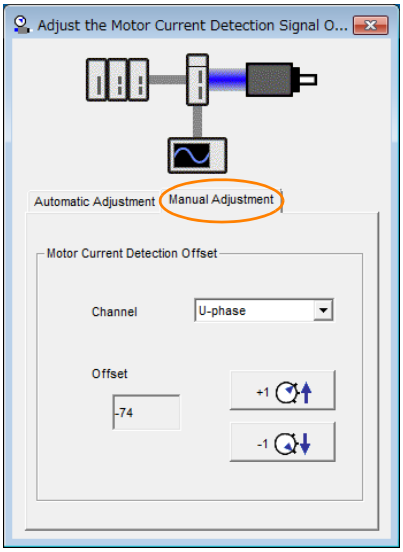

6. Set the **Channel** Box in the **Motor Current Detection Offset** Area to **U-phase**.

7. Use the **+1** and **-1** Buttons to adjust the offset for phase U.
   Change the offset by about 10 in the direction that reduces the torque ripple.
   Adjustment range: -512 to +511

8. Set the **Channel** Box in the **Motor Current Detection Offset** Area to V-**phase**.

9. Use the **+1** and **-1** Buttons to adjust the offset for phase V.
   Change the offset by about 10 in the direction that reduces the torque ripple.

10. Repeat steps 6 to 9 until the torque ripple cannot be decreased any further regardless of whether you increase or decrease the offsets.

11. Reduce the amount by which you change the offsets each time and repeat steps 6 to 9.

This concludes the procedure to manually adjust the motor current detection signal offset.

6.13 Forcing the Motor to Stop

You can force the Servomotor to stop for a signal from the host controller or an external device.

To force the motor to stop, you must allocate the FSTP (Forced Stop Input) signal in Pn516 = n.□□□X. You can specify one of the following stopping methods: dynamic brake (DB), coasting to a stop, or decelerating to a stop.

Note: Forcing the motor to stop is not designed to comply with any safety standard. In this respect, it is different from the hard wire base block (HWBB).

Information **Panel Operator and Digital Operator Displays**
When a forced stop is performed, the panel and the Digital Operator will display FSTP.

⚠ CAUTION

- To prevent accidents that may result from contact faults or disconnections, use a normally closed switch for the Forced Stop Input signal.

6.13.1 FSTP (Forced Stop Input) Signal

Classification	Signal	Connector Pin No.	Signal Status	Description
Input	FSTP	Must be allocated.	ON (closed)	Drive is enabled (normal operation).
			OFF (open)	The motor is stopped.

Note: You must allocate the FSTP signal to use it. Use Pn516 = n.□□□X (FSTP (Forced Stop Input) Signal Allocation) to allocate the FSTP signal to a connector pin. Refer to the following section for details.
☞ *6.1.1 Input Signal Allocations* on page 6-4

6.13.2 Stopping Method Selection for Forced Stops

Use Pn00A = n.□□X□ (Stopping Method for Forced Stops) to set the stopping method for forced stops.

Parameter		Description	When Enabled	Classification
Pn00A	n.□□0□	Apply the dynamic brake or coast the motor to a stop (use the stopping method set in Pn001 = n.□□□X).	After restart	Setup
	n.□□1□ (default setting)	Decelerate the motor to a stop using the torque set in Pn406 as the maximum torque. Use the setting of Pn001 = n.□□□X for the status after stopping.		
	n.□□2□	Decelerate the motor to a stop using the torque set in Pn406 as the maximum torque and then let the motor coast.		
	n.□□3□	Decelerate the motor to a stop using the deceleration time set in Pn30A. Use the setting of Pn001 = n.□□□X for the status after stopping.		
	n.□□4□	Decelerate the motor to a stop using the deceleration time set in Pn30A and then let the motor coast.		

Note: You cannot decelerate a Servomotor to a stop during torque control. For torque control, the Servomotor will be stopped with the dynamic braking or coast to a stop according to the setting of Pn001 = n.□□□X (Servo OFF or Alarm Group 1 Stopping Method).

Stopping the Servomotor by Setting Emergency Stop Torque (Pn406)

To stop the Servomotor by setting emergency stop torque, set Pn406 (Emergency Stop Torque).

If Pn00A = n.□□X□ is set to 1 or 2, the Servomotor will be decelerated to a stop using the torque set in Pn406 as the maximum torque.

The default setting is 800%. This setting is large enough to allow you to operate the Servomotor at the maximum torque. However, the maximum emergency stop torque that you can actually use is the maximum torque of the Servomotor.

Pn406	Emergency Stop Torque			Speed Position	
	Setting Range	Setting Unit	Default Setting	When Enabled	Classification
	0 to 800	1%*	800	Immediately	Setup

* Set a percentage of the motor rated torque.

Stopping the Servomotor by Setting the Deceleration Time for Servo OFF and Forced Stops (Pn30A)

To specify the Servomotor deceleration time and use it to stop the Servomotor, set Pn30A (Deceleration Time for Servo OFF and Forced Stops).

Pn30A	Deceleration Time for Servo OFF and Forced Stops			Speed Position	
	Setting Range	Setting Unit	Default Setting	When Enabled	Classification
	0 to 10,000	1 ms	0	Immediately	Setup

If you set Pn30A to 0, the Servomotor will be stopped with a zero speed.

The deceleration time that you set in Pn30A is the time to decelerate the Servomotor from the maximum motor speed.

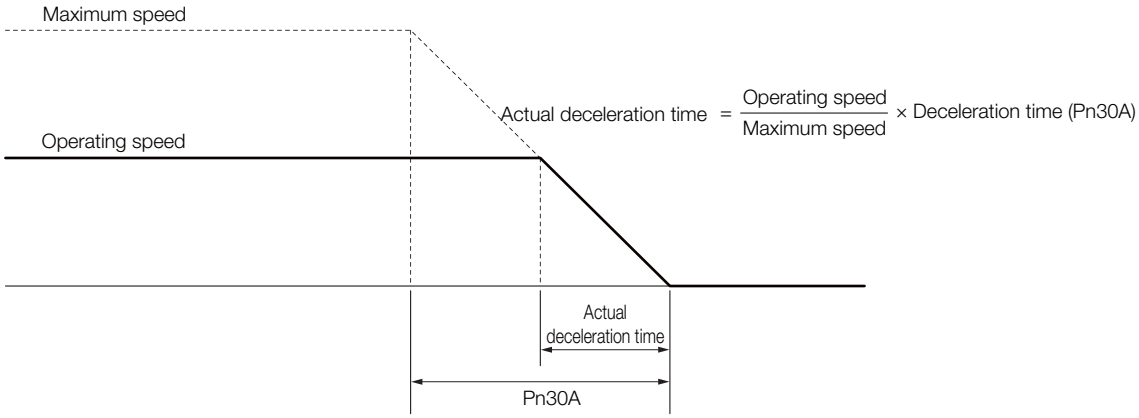

6.13.3 Resetting Method for Forced Stops

This section describes the reset methods that can be used after stopping operation for an FSTP (Forced Stop Input) signal.

If the FSTP (Forced Stop Input) signal is OFF and the SV_ON (Servo ON) command is sent, the forced stop state will be maintained even after the FSTP signal is turned ON.

Send the SV_OFF (Servo OFF) command to place the SERVOPACK in the base block (BB) state and then send the SV_ON (Servo ON) command.

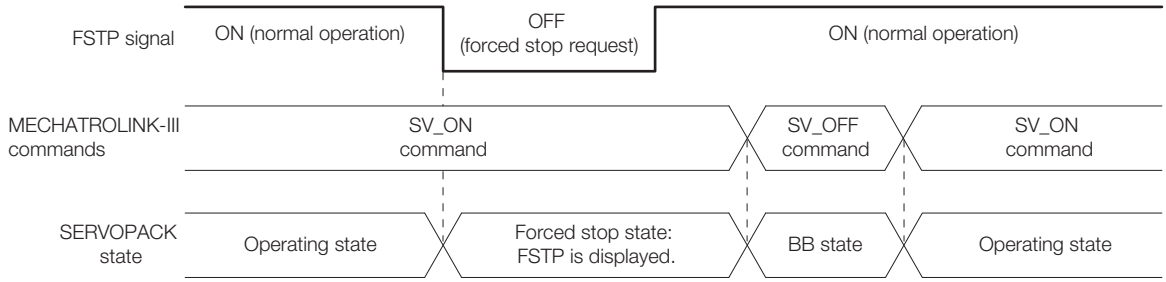

6.14 Overheat Protection

Overheat protection detects an A.93B warning (Overheat Warning) and an A.862 alarm (Overheat Alarm) by monitoring the overheat protection input signal from a Yaskawa SGLFW2 Linear Servomotor or from a sensor attached to the machine.

SERVOPACKs with software version 0023 or higher support overheat protection.

When you use overheat protection, you must wire the overheat protection input (TH) signal and select overheat protection (Pn61A = n.□□□X).

6.14.1 Connecting the Overheat Protection Input (TH) Signal

To use overheat protection, you must connect an overheat protection input (TH) signal to the SERVOPACK. This section describes the connection methods for the overheat protection input (TH) signal.

Using Overheat Protection in the Linear Servomotor

- If you use a Serial Converter Unit, connect the connector for the polarity sensor and thermostat cable of the Linear Servomotor to the Serial Converter Unit.
- If you do not use a Serial Converter Unit, connect the thermostat cable of the Linear Servomotor to CN1-5 on the SERVOPACK.

Using Overheat Protection for the Machine

To use overheat protection for the machine, connect the overheat protection input (an analog voltage input) from the sensor mounted to the machine to the CN1-5 on the SERVOPACK.

6.14.2 Overheat Protection Selection

The overheat protection function is selected with Pn61A = n.□□□X (Overheat Protection Selections).

Parameter		Meaning	When Enabled	Classification
Pn61A	n.□□□0 (default setting)	Disable overheat protection.	After restart	Setup
	n.□□□1	Use overheat protection in the Yaskawa Linear Servomotor.*		
	n.□□□2	Monitor a negative voltage input from a sensor attached to the machine and use overheat protection.		
	n.□□□3	Monitor a positive voltage input from a sensor attached to the machine and use overheat protection.		

* The SGLFW2 is the only Yaskawa Linear Servomotor that supports this function.

Using Overheat Protection in the Yaskawa Linear Servomotor

To use the overheat protection in the Yaskawa Linear Servomotor (SGLFW2), set Pn61A to n.□□□1.

An A.93B warning (Overheat Warning) will be detected if the overheat protection input (TH) signal from the Yaskawa SGLFW2 Linear Servomotor exceeds the warning temperature.

An A.862 alarm (Overheat Alarm) will be detected if the overheat protection input (TH) signal from the Yaskawa SGLFW2 Linear Servomotor exceeds the alarm temperature.

Important

- If the overheat protection input signal line is disconnected or short-circuited, an A.862 alarm will occur.
- If you set Pn61A to n.□□□1 (Use overheat protection in the Yaskawa Linear Servomotor), the parameters in the Servomotor are enabled and the following parameters are disabled.
  - Overheat Alarm Level (Pn61B)
  - Overheat Warning Level (Pn61C)
  - Overheat Alarm Filter Time (Pn61D)

Monitoring the Machine's Temperature and Using Overheat Protection

Set Pn61A = n.□□□X to 2 or 3 to use overheat protection for the machine.

Set the following parameters as required.

Pn61B	Overheat Alarm Level			Speed Position Torque	
	Setting Range	Setting Unit	Default Setting	When Enabled	Classification
	0 to 500	0.01 V	250	Immediately	Setup
Pn61C	Overheat Warning Level			Speed Position Torque	
	Setting Range	Setting Unit	Default Setting	When Enabled	Classification
	0 to 100	1%	100	Immediately	Setup
Pn61D	Overheat Alarm Filter Time			Speed Position Torque	
	Setting Range	Setting Unit	Default Setting	When Enabled	Classification
	0 to 65,535	1 s	0	Immediately	Setup

Important

- When Pn61A is set to n.□□□2, an A.862 alarm will occur if the overheat protection input signal line is disconnected or short-circuited.
- When Pn61A is set to n.□□□3, an A862 alarm will not occur if the overheat protection input signal line is disconnected or short-circuited. To ensure safety, we recommend that you connect the external circuits so that you can use a negative voltage input for the overheat protection input (an analog voltage input).

Trial Operation and Actual Operation

7

This chapter provides information on the flow and procedures for trial operation and convenient functions to use during trial operation.

7.1 Flow of Trial Operation 7-2

7.1.1 Flow of Trial Operation for Rotary Servomotors . . 7-2
7.1.2 Flow of Trial Operation for Linear Servomotors . . 7-3

7.2 Inspections and Confirmations before Trial Operation . . 7-6

7.3 Trial Operation for the Servomotor without a Load . . 7-7

7.3.1 Preparations 7-7
7.3.2 Applicable Tools 7-8
7.3.3 Operating Procedure 7-8

7.4 Trial Operation with MECHATROLINK-III Communications . . 7-10

7.5 Trial Operation with the Servomotor Connected to the Machine . . 7-12

7.5.1 Precautions 7-12
7.5.2 Preparations 7-12
7.5.3 Operating Procedure 7-13

7.6 Convenient Function to Use during Trial Operation . . 7-14

7.6.1 Program Jogging 7-14
7.6.2 Origin Search 7-19
7.6.3 Test without a Motor 7-21

7.7 Operation Using MECHATROLINK-III Commands . . 7-26

7.1 Flow of Trial Operation

7.1.1 Flow of Trial Operation for Rotary Servomotors

The procedure for trial operation is given below.

- Preparations for Trial Operation

Step	Meaning	Reference
1	Installation Install the Servomotor and SERVOPACK according to the installation conditions. First, operation is checked with no load. Do not connect the Servomotor to the machine.	*Chapter 3 SERVOPACK Installation*
2	Wiring and Connections Wire and connect the SERVOPACK. First, Servomotor operation is checked without a load. Do not connect the CN1 connector on the SERVOPACK.	*Chapter 4 Wiring and Connecting SERVOPACKs*
3	Confirmations before Trial Operation	*7.2 Inspections and Confirmations before Trial Operation* on page 7-6
4	Power ON	–
5	Resetting the Absolute Encoder This step is necessary only for a Servomotor with an Absolute Encoder.	*5.16 Resetting the Absolute Encoder* on page 5-50

- Trial Operation

Step	Meaning	Reference
1	Trial Operation for the Servomotor without a Load 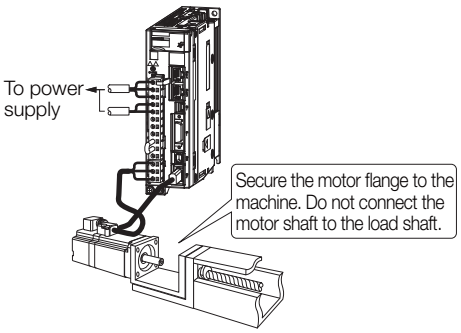 	*7.3 Trial Operation for the Servomotor without a Load* on page 7-7
2	Trial Operation with MECHATROLINK-III Communications 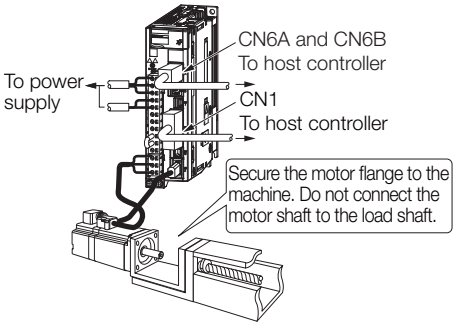 	*7.4 Trial Operation with MECHATROLINK-III Communications* on page 7-10

Continued on next page.

Continued from previous page.

Step	Meaning	Reference
3	Trial Operation with the Servomotor Connected to the Machine 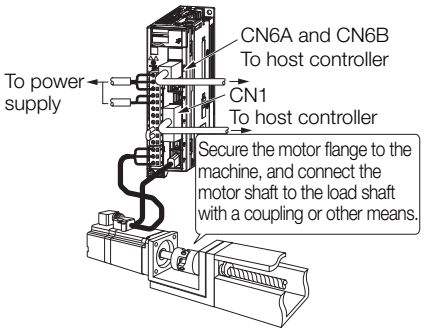 	*7.5 Trial Operation with the Servomotor Connected to the Machine* on page 7-12

7.1.2 Flow of Trial Operation for Linear Servomotors

The procedure for trial operation is given below.

- Preparations for Trial Operation

Step	Meaning	Reference
1	Installation Install the Servomotor and SERVOPACK according to the installation conditions. First, operation is checked with no load. Do not connect the Servomotor to the machine.	*Chapter 3 SERVOPACK Installation*
2	Wiring and Connections Wire and connect the SERVOPACK. First, Servomotor operation is checked without a load. Do not connect the CN1 connector on the SERVOPACK.	*Chapter 4 Wiring and Connecting SERVOPACKs*
3	Confirmations before Trial Operation	*7.2 Inspections and Confirmations before Trial Operation* on page 7-6
4	Power ON	–

Continued on next page.

Continued from previous page.

Step	Meaning	Reference
5	Setting Parameters in the SERVOPACK	
6	Setting the Origin of the Absolute Linear Encoder	*5.17.2 Setting the Origin of the Absolute Linear Encoder* on page 5-53

Step	No. of Parameter to Set	Description	Remarks	Reference
5-1	Pn282	Linear Encoder Pitch	Set this parameter only if you are using a Serial Converter Unit.	page 5-18
5-2	–	Writing Parameters to the Linear Servomotor	Set this parameter only if you are not using a Serial Converter Unit.	page 5-19
5-3	Pn080 = n.□□X□	Motor Phase Sequence Selection	–	page 5-23
5-4	Pn080 = n.□□□X	Polarity Sensor Selection	–	page 5-25
5-5	–	Polarity Detection	This step is necessary only for a Linear Servomotor with a Polarity Sensor.	page 5-26
5-6	Pn50A = n.X□□□ and Pn50B = n.□□□X	Overtravel Signal Allocations	–	page 5-29
5-7	Pn483, Pn484	Force Control	–	page 6-28

• Trial Operation

Step	Meaning	Reference
1	Trial Operation for the Servomotor without a Load 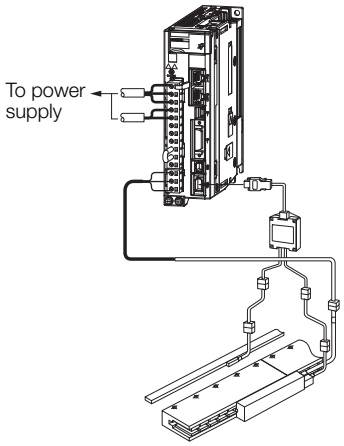	*7.3 Trial Operation for the Servomotor without a Load* on page 7-7

Continued on next page.

Continued from previous page.

Step	Meaning	Reference
2	Trial Operation with MECHATROLINK-III Communications 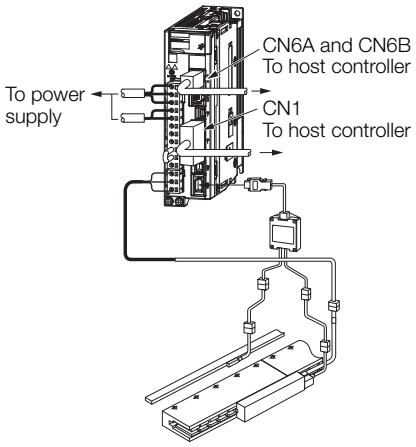 	*7.4 Trial Operation with MECHATROLINK-III Communications* on page 7-10
3	Trial Operation with the Servomotor Connected to the Machine 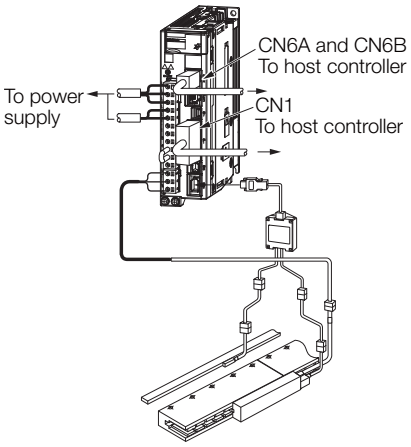 	*7.5 Trial Operation with the Servomotor Connected to the Machine* on page 7-12

7.2 Inspections and Confirmations before Trial Operation

To ensure safe and correct trial operation, check the following items before you start trial operation.

- Make sure that the SERVOPACK and Servomotor are installed, wired, and connected correctly.
- Make sure that the correct power supply voltage is supplied to the SERVOPACK.
- Make sure that there are no loose parts in the Servomotor mounting.
- If you are using a Servomotor with an Oil Seal, make sure that the oil seal is not damaged. Also make sure that oil has been applied.
- If you are performing trial operation on a Servomotor that has been stored for a long period of time, make sure that all Servomotor inspection and maintenance procedures have been completed.
  Refer to the manual for your Servomotor for Servomotor maintenance and inspection information.
- If you are using a Servomotor with a Holding Brake, make sure that the brake is released in advance. To release the brake, you must apply the specified voltage of 24 VDC to the brake. A circuit example for trial operation is provided below.

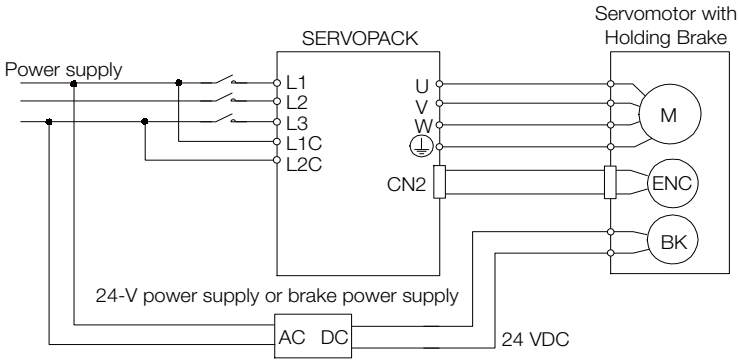

7.3 Trial Operation for the Servomotor without a Load

You use jogging for trial operation of the Servomotor without a load.

Jogging is used to check the operation of the Servomotor without connecting the SERVOPACK to the host controller. The Servomotor is moved at the preset jogging speed.

⚠ CAUTION

- During jogging, the overtravel function is disabled. Consider the range of motion of your machine when you jog the Servomotor.

Important

The tuning-less function is enabled as the default setting. When the tuning-less function is enabled, gain will increase and vibration may occur if the Servomotor is operated with no load. If vibration occurs, disable the tuning-less function (Pn170 = n.□□□0).

7.3.1 Preparations

Always check the following before you execute jogging.

- The parameters must not be write prohibited.
- The main circuit power supply must be ON.
- There must be no alarms.
- There must be no hard wire base block (HWBB).
- The servo must be OFF.
- The jogging speed must be set considering the operating range of the machine.
  The jogging speed is set with the following parameters.
  - Rotary Servomotors

Pn304	Jogging Speed			Speed Position Torque	
	Setting Range	Setting Unit	Default Setting	When Enabled	Classification
	0 to 10,000	1 min^{-1}	500	Immediately	Setup
Pn305	Soft Start Acceleration Time			Speed	
	Setting Range	Setting Unit	Default Setting	When Enabled	Classification
	0 to 10,000	1 ms	0	Immediately	Setup
Pn306	Soft Start Deceleration Time			Speed	
	Setting Range	Setting Unit	Default Setting	When Enabled	Classification
	0 to 10,000	1 ms	0	Immediately	Setup

  - Direct Drive Servomotors

Pn304	Jogging Speed			Speed Position Torque	
	Setting Range	Setting Unit	Default Setting	When Enabled	Classification
	0 to 10,000	0.1 min^{-1}	500	Immediately	Setup
Pn305	Soft Start Acceleration Time			Speed	
	Setting Range	Setting Unit	Default Setting	When Enabled	Classification
	0 to 10,000	1 ms	0	Immediately	Setup
Pn306	Soft Start Deceleration Time			Speed	
	Setting Range	Setting Unit	Default Setting	When Enabled	Classification
	0 to 10,000	1 ms	0	Immediately	Setup

- Linear Servomotors

Pn383	Jogging Speed			Speed Position Force	
	Setting Range	Setting Unit	Default Setting	When Enabled	Classification
	0 to 10,000	1 mm/s	50	Immediately	Setup
Pn305	Soft Start Acceleration Time			Speed	
	Setting Range	Setting Unit	Default Setting	When Enabled	Classification
	0 to 10,000	1 ms	0	Immediately	Setup
Pn306	Soft Start Deceleration Time			Speed	
	Setting Range	Setting Unit	Default Setting	When Enabled	Classification
	0 to 10,000	1 ms	0	Immediately	Setup

7.3.2 Applicable Tools

The following table lists the tools that you can use to perform jogging and the applicable tool functions.

Tool	Function	Operating Procedure Reference
Digital Operator	Fn002	Σ-7-Series Digital Operator Operating Manual (Manual No.: SIEP S800001 33)
SigmaWin+	***Operation - Jog***	*Operating Procedure* on page 7-8

7.3.3 Operating Procedure

Use the following procedure to jog the motor.

1. Click the Servo Drive Button in the workspace of the Main Window of the SigmaWin+.
2. Select **JOG Operation** in the Menu Dialog Box.
   The Jog Operation Dialog Box will be displayed.
3. Read the warnings and then click the **OK** Button.

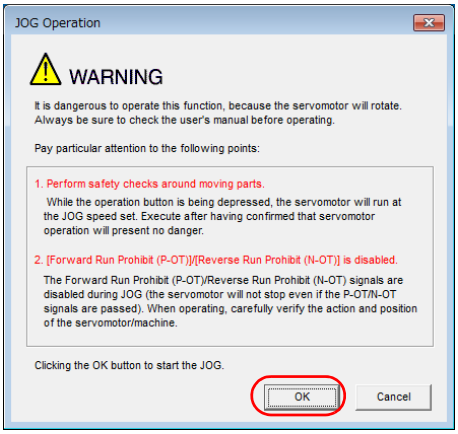

4. Check the jogging speed and then click the **Servo ON** Button.

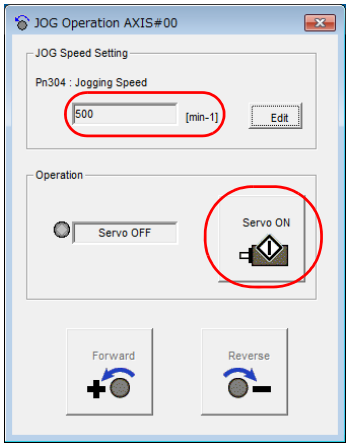

The display in the **Operation** Area will change to **Servo ON**.

Information To change the speed, click the **Edit** Button and enter the new speed.

5. Click the **Forward** Button or the **Reverse** Button.
Jogging will be performed only while you hold down the mouse button.

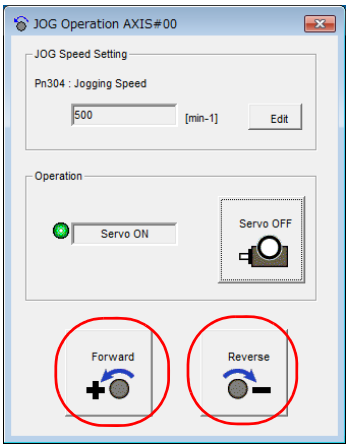

6. After you finish jogging, turn the power supply to the SERVOPACK OFF and ON again.

This concludes the jogging procedure.

7.4 Trial Operation with MECHATROLINK-III Communications

A trial operation example for MECHATROLINK-III communications is given below.

Refer to the following manual for command details.

Σ-7-Series MECHATROLINK-III Communications Standard Servo Profile Command Manual (Manual No.: SIEP S800001 31)

1. Confirm that the wiring is correct, and then connect the I/O signal connector (CN1 connector).
   Refer to the following chapter for details on wiring.
   Chapter 4 Wiring and Connecting SERVOPACKs

2. Turn ON the power supplies to the SERVOPACK and host controller.
   If control power is being supplied correctly, the PWR indicator on the SERVOPACK will light.
   If main circuit power is being supplied correctly, the CHARGE indicator on the SERVOPACK will light.
   If communications are established, the L1 or L2 indicators, whichever one corresponds to the CN6A or CN6B connector where the MECHATROLINK-III Communications Cable (RJ-45) is connected, will light. If the L1 or L2 indicator does not light, recheck the settings of MECHATROLINK-III setting switches (S1, S2, and S3) and then turn the power supply OFF and ON again.

3. Send the CONNECT command from the host controller.
   If the SERVOPACK correctly receives the CONNECT command, the CN indicator will light.
   If the CN indicator does not light, the settings of the CONNECT command are not correct. Correct the settings of the CONNECT command, and then send it from the host controller again.

4. Confirm the product model with the ID_RD command.
   The SERVOPACK will return the product model (example: SGD7S-R90A30A).

5. Set the following items, which are necessary for trial operation.

Setting	Reference
Electronic Gear	*5.15 Electronic Gear Settings* on page 5-44
Motor Direction	*5.5 Motor Direction Setting* on page 5-17
Overtravel	*5.11 Overtravel and Related Settings* on page 5-29

6. Save the settings that you made in step 5.
   If the settings are saved in the host controller, use the SVPRM_WR command with the mode set to RAM to save them.
   If the settings are saved in the SERVOPACK, use the SVPRM_WR command with the mode set to non-volatile memory to save them.

7. Send the CONFIG command to enable the settings.

8. Send the SENS_ON command to obtain the position information (encoder ready).

9. Send the SV_ON command.
   Servomotor operation will be enabled and the SERVOPACK will return 1 for SVON (power supplied to motor) in the status.

10. Operate the Servomotor at low speed.
    Operating Example for a Positioning Command
    Command: POSING
    Command settings: Positioning position = 10,000 (If you are using an absolute encoder, add 10,000 to the present position), rapid traverse speed = 400.

11. While operation is in progress for step 10, confirm the following items.

Confirmation Item	Reference
Confirm that the rotational direction of the Servomotor agrees with the forward or reverse reference. If they do not agree, correct the rotation direction of the Servomotor.	☞ *5.5 Motor Direction Setting* on page 5-17
Confirm that no abnormal vibration, noise, or temperature rise occurs. If any abnormalities are found, implement corrections.	☞ *12.5 Troubleshooting Based on the Operation and Conditions of the Servomotor* on page 12-59

Note: If the load machine is not sufficiently broken in before trial operation, the Servomotor may become overloaded.

7.5 Trial Operation with the Servomotor Connected to the Machine

This section provides the procedure for trial operation with both the machine and Servomotor.

7.5.1 Precautions

⚠ WARNING

- Operating mistakes that occur after the Servomotor is connected to the machine may not only damage the machine, but they may also cause accidents resulting in personal injury.

Important

If you disabled the overtravel function for trial operation of the Servomotor without a load, enable the overtravel function (P-OT and N-OT signal) before you preform trial operation with the Servomotor connected to the machine in order to provide protection.

If you will use a holding brake, observe the following precautions during trial operation.

- Before you check the operation of the brake, implement measures to prevent the machine from falling due to gravity and to prevent vibration from being caused by an external force.
- First check the Servomotor operation and brake operation with the Servomotor uncoupled from the machine. If no problems are found, connect the Servomotor to the machine and perform trial operation again.

Control the operation of the brake with the /BK (Brake) signal output from the SERVOPACK.

Refer to the following sections for information on wiring and the related parameter settings.

☞ *4.4.4 Wiring the SERVOPACK to the Holding Brake* on page 4-33
☞ *5.12 Holding Brake* on page 5-34

Important

Failures caused by incorrect wiring or incorrect voltage application in the brake circuit may cause the SERVOPACK to fail, damage the SERVOPACK, damage the equipment, or cause an accident resulting in death or injury.
Observe the precautions and instructions for wiring and trial operation precisely as described in this manual.

7.5.2 Preparations

Always confirm the following before you perform the trial operation procedure for both the machine and Servomotor.

- Make sure that the procedure described in *7.4 Trial Operation with MECHATROLINK-III Communications* on page 7-10 has been completed.
- Make sure that the SERVOPACK is connected correctly to both the host controller and the peripheral devices.
  - Safety Function Wiring
    - If you are not using the safety function, leave the Safety Jumper Connector (provided as an accessory with the SERVOPACK) connected to CN8.
    - If you are using the safety function, remove the Safety Jumper Connector from CN8 and connect the safety function device.
  - Overtravel wiring
  - Brake wiring
  - Allocation of the /BK (Brake) signal to a pin on the I/O signal connector (CN1)
  - Emergency stop circuit wiring
  - Host controller wiring

7.5.3 Operating Procedure

1. Enable the overtravel signals.
   ☞ *5.11.2 Setting to Enable/Disable Overtravel* on page 5-30

2. Make the settings for the protective functions, such as the safety function, overtravel, and the brake.
   ☞ *4.6 Connecting Safety Function Signals* on page 4-41
   ☞ *5.11 Overtravel and Related Settings* on page 5-29
   ☞ *5.12 Holding Brake* on page 5-34

3. Turn OFF the power supply to the SERVOPACK.
   The control power supply and main circuit power supply will turn OFF.

4. Couple the Servomotor to the machine.

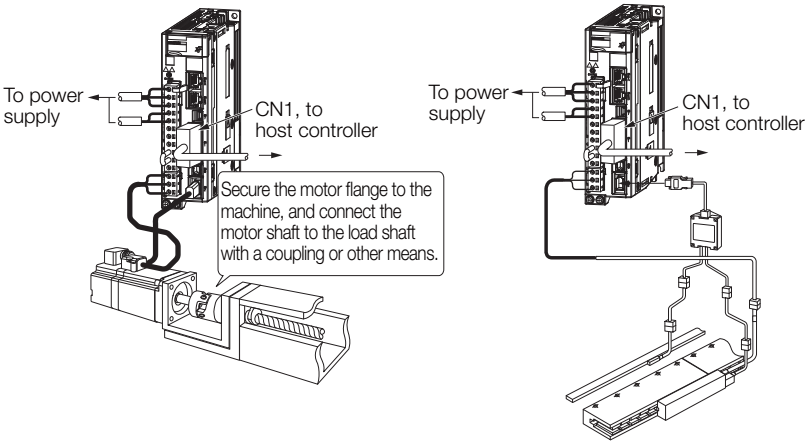

5. Turn ON the power supply to the machine and host controller and turn ON the control power supply and main circuit power supply to the SERVOPACK.

6. Check the protective functions, such as overtravel and the brake, to confirm that they operate correctly.
   Note: Enable activating an emergency stop so that the Servomotor can be stopped safely should an error occur during the remainder of the procedure.

7. Perform trial operation according to *7.4 Trial Operation with MECHATROLINK-III Communications* on page 7-10 and confirm that the same results are obtained as when trial operation was performed on the Servomotor without a load.

8. If necessary, adjust the servo gain to improve the Servomotor response characteristics.
   The Servomotor and machine may not be broken in completely for the trial operation. Therefore, let the system run for a sufficient amount of time to ensure that it is properly broken in.

9. For future maintenance, save the parameter settings with one of the following methods.
   - Use the SigmaWin+ to save the parameters as a file.
   - Use the Parameter Copy Mode of the Digital Operator.
   - Record the settings manually.

This concludes trial operation with both the machine and Servomotor.

7.6 Convenient Function to Use during Trial Operation

This section describes some convenient operations that you can use during trial operation. Use them as required.

7.6.1 Program Jogging

You can use program jogging to perform continuous operation with a preset operation pattern, travel distance, movement speed, acceleration/deceleration time, waiting time, and number of movements.

You can use this operation when you set up the system in the same way as for normal jogging to move the Servomotor without connecting it to the host controller in order to check Servomotor operation and execute simple positioning operations.

Preparations

Always check the following before you execute program jogging.

- The parameters must not be write prohibited.
- The main circuit power supply must be ON.
- There must be no alarms.
- There must be no hard wire base block (HWBB).
- The servo must be OFF.
- The range of machine motion and the safe movement speed of your machine must be considered when you set the travel distance and movement speed.
- There must be no overtravel.

Additional Information

- You can use the functions that are applicable to position control. However, parameters related to motion control through MECHATROLINK communications (i.e., Pn800 and higher) are disabled.
- The overtravel function is enabled.

Program Jogging Operation Pattern

An example of a program jogging operation pattern is given below. In this example, the Servomotor direction is set to Pn000 = n.□□□0 (Use CCW as the forward direction).

Setting of Pn530	Setting	Operation Pattern
n.□□□0	(Waiting time → Forward travel distance) × Number of movements	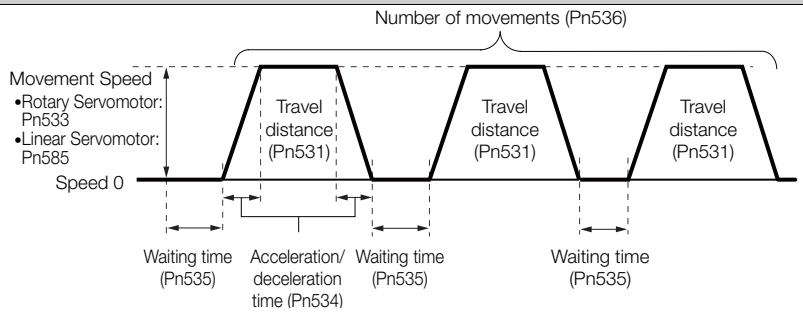

Continued on next page.

Continued from previous page.

Setting of Pn530	Setting	Operation Pattern
n.□□□1	(Waiting time → Reverse by travel distance) × Number of movements	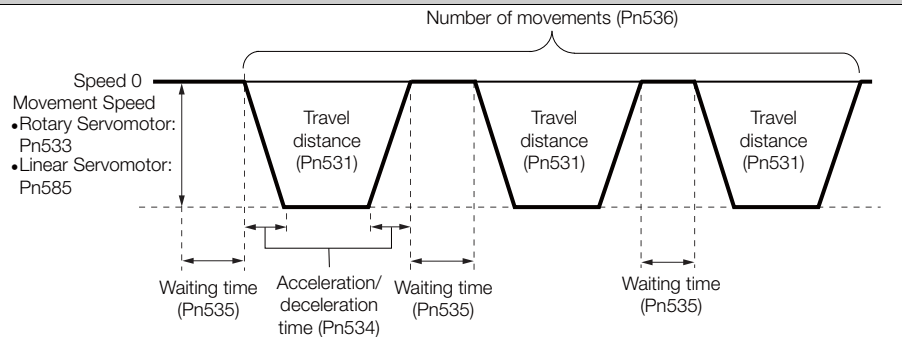
n.□□□2	(Waiting time → Forward by travel distance) × Number of movements → (Waiting time → Reverse by travel distance) × Number of movements	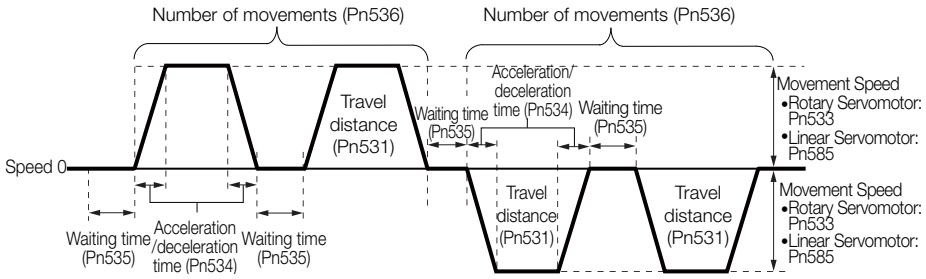
n.□□□3	(Waiting time → Reverse by travel distance) × Number of movements → (Waiting time → Forward by travel distance) × Number of movements	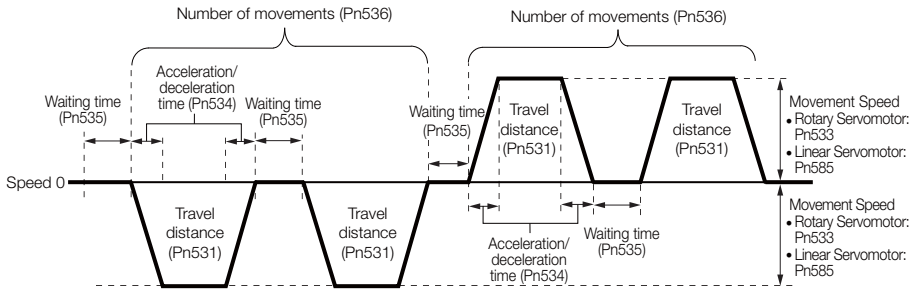
n.□□□4	(Waiting time → Forward by travel distance → Waiting time → Reverse by travel distance) × Number of movements	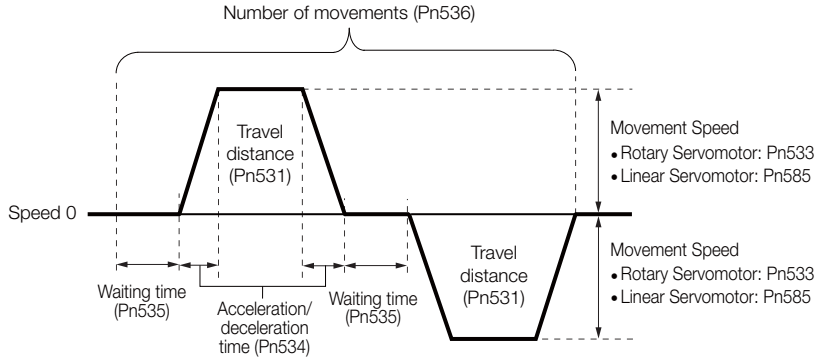
n.□□□5	(Waiting time → Reverse by travel distance → Waiting time → Forward by travel distance) × Number of movements	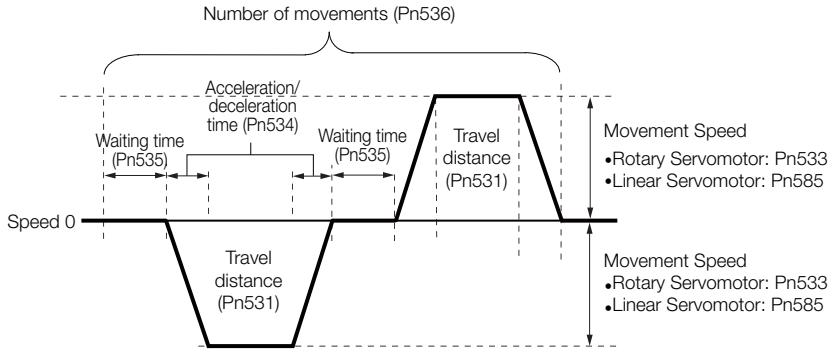

Information

If Pn530 is set to n.□□□0, n.□□□1, n.□□□4, or n.□□□5, you can set Pn536 (Program Jogging Number of Movements) to 0 to perform infinite time operation.
You cannot use infinite time operation if Pn530 is set to n.□□□2 or n.□□□3.
If you perform infinite time operation from the Digital Operator, press the **JOG/SVON** Key to turn OFF the servo to end infinite time operation.

Related Parameters

Use the following parameters to set the program jogging operation pattern. Do not change the settings while the program jogging operation is being executed.

- Rotary Servomotors

Pn530	Program Jogging-Related Selections			Speed Position Torque	
	Setting Range	Setting Unit	Default Setting	When Enabled	Classification
	0000 to 0005	–	0000	Immediately	Setup
Pn531	Program Jogging Travel Distance			Speed Position Torque	
	Setting Range	Setting Unit	Default Setting	When Enabled	Classification
	1 to 1,073,741,824	1 reference unit	32,768	Immediately	Setup
Pn533	Program Jogging Movement Speed			Speed Position Torque	
	Setting Range	Setting Unit	Default Setting	When Enabled	Classification
	1 to 10,000	1 min^{-1}	500	Immediately	Setup
Pn534	Program Jogging Acceleration/Deceleration Time			Speed Position Torque	
	Setting Range	Setting Unit	Default Setting	When Enabled	Classification
	2 to 10,000	1 ms	100	Immediately	Setup
Pn535	Program Jogging Waiting Time			Speed Position Torque	
	Setting Range	Setting Unit	Default Setting	When Enabled	Classification
	0 to 10,000	1 ms	100	Immediately	Setup
Pn536	Program Jogging Number of Movements			Speed Position Torque	
	Setting Range	Setting Unit	Default Setting	When Enabled	Classification
	0 to 1,000	1	1	Immediately	Setup

- Direct Drive Servomotors

Pn530	Program Jogging-Related Selections			Speed Position Torque	
	Setting Range	Setting Unit	Default Setting	When Enabled	Classification
	0000 to 0005	–	0000	Immediately	Setup
Pn531	Program Jogging Travel Distance			Speed Position Torque	
	Setting Range	Setting Unit	Default Setting	When Enabled	Classification
	1 to 1,073,741,824	1 reference unit	32,768	Immediately	Setup
Pn533	Program Jogging Movement Speed			Speed Position Torque	
	Setting Range	Setting Unit	Default Setting	When Enabled	Classification
	1 to 10,000	0.1 min^{-1}	500	Immediately	Setup
Pn534	Program Jogging Acceleration/Deceleration Time			Speed Position Torque	
	Setting Range	Setting Unit	Default Setting	When Enabled	Classification
	2 to 10,000	1 ms	100	Immediately	Setup
Pn535	Program Jogging Waiting Time			Speed Position Torque	
	Setting Range	Setting Unit	Default Setting	When Enabled	Classification
	0 to 10,000	1 ms	100	Immediately	Setup
Pn536	Program Jogging Number of Movements			Speed Position Torque	
	Setting Range	Setting Unit	Default Setting	When Enabled	Classification
	0 to 1,000	1	1	Immediately	Setup

- Linear Servomotors

Pn530	Program Jogging-Related Selections			Speed Position Force	
	Setting Range	Setting Unit	Default Setting	When Enabled	Classification
	0000 to 0005	–	0000	Immediately	Setup
Pn531	Program Jogging Travel Distance			Speed Position Force	
	Setting Range	Setting Unit	Default Setting	When Enabled	Classification
	1 to 1,073,741,824	1 reference unit	32,768	Immediately	Setup
Pn585	Program Jogging Movement Speed			Speed Position Force	
	Setting Range	Setting Unit	Default Setting	When Enabled	Classification
	1 to 10,000	1 mm/s	50	Immediately	Setup
Pn534	Program Jogging Acceleration/Deceleration Time			Speed Position Force	
	Setting Range	Setting Unit	Default Setting	When Enabled	Classification
	2 to 10,000	1 ms	100	Immediately	Setup
Pn535	Program Jogging Waiting Time			Speed Position Force	
	Setting Range	Setting Unit	Default Setting	When Enabled	Classification
	0 to 10,000	1 ms	100	Immediately	Setup
Pn536	Program Jogging Number of Movements			Speed Position Force	
	Setting Range	Setting Unit	Default Setting	When Enabled	Classification
	0 to 1,000	1	1	Immediately	Setup

Applicable Tools

The following table lists the tools that you can use to perform program jogging and the applicable tool functions.

Tool	Function	Reference
Digital Operator	Fn004	Σ-7-Series Digital Operator Operating Manual (Manual No.: SIEP S800001 33)
SigmaWin+	***Operation - Program JOG Operation***	*Operating Procedure* on page 7-17

Operating Procedure

Use the following procedure for a program jog operation.

1. Click the Servo Drive Button in the workspace of the Main Window of the SigmaWin+.

2. Select **JOG Program** in the Menu Dialog Box.
   The Jog Program Dialog Box will be displayed.

3. Read the warnings and then click the **OK** Button.

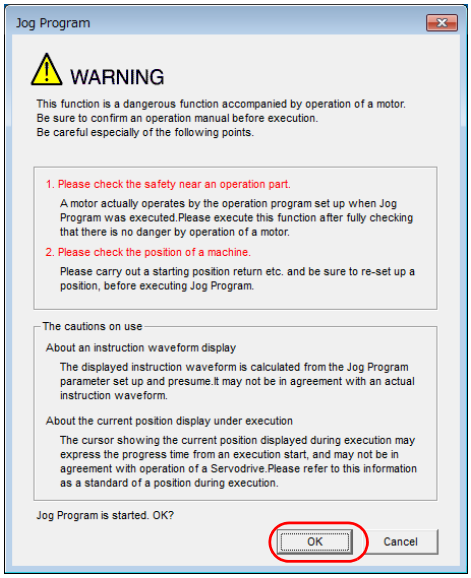

4. Set the operating conditions, click the **Apply** Button, and then click the **Run** Button.
A graph of the operation pattern will be displayed.

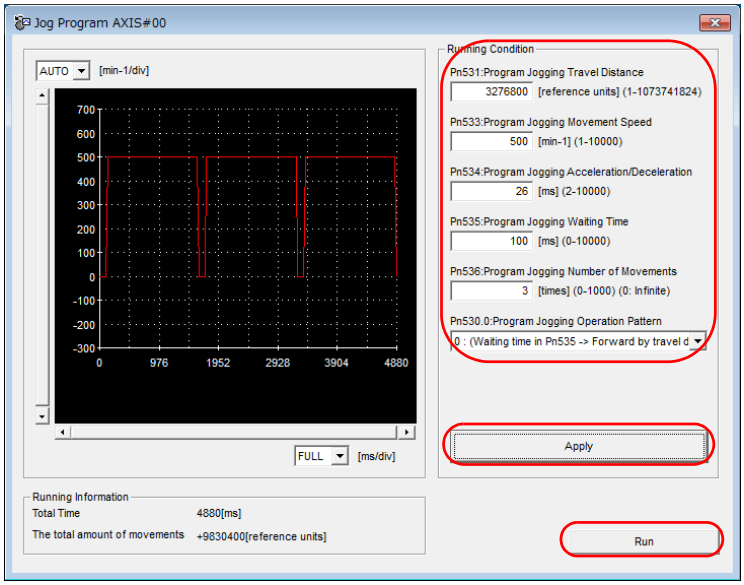

5. Click the **Servo ON** Button and then the **Execute** Button. The program jogging operation will be executed.

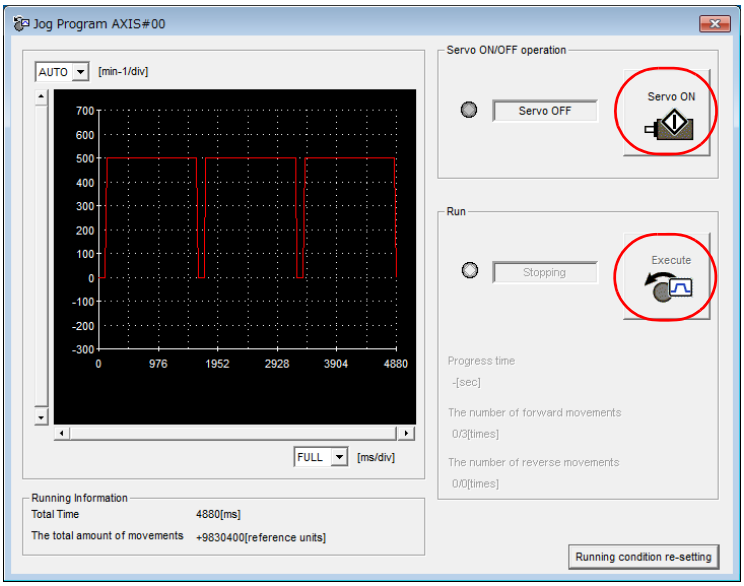

⚠ CAUTION

- Be aware of the following points if you cancel the program jogging operation while the Servomotor is operating.
  - If you cancel operation with the **Servo OFF** Button, the Servomotor will stop according to setting of the Servo OFF stopping method (Pn001 = n.□□□X).
  - If you cancel operation with the **Cancel** Button, the Servomotor will decelerate to a stop and then enter a zero-clamped state.

This concludes the program jogging procedure.

7.6.2 Origin Search

The origin search operation positions the motor to the origin within one rotation and then clamps it there.

⚠ CAUTION

- Make sure that the load is not coupled when you execute an origin search.
  The Forward Drive Prohibit (P-OT) signal and Reverse Drive Prohibit (N-OT) signal are disabled during an origin search.

Use an origin search when it is necessary to align the origin within one rotation with the machine origin. The following speeds are used for origin searches.

- Rotary Servomotors: 60 min^{-1}
- Direct Drive Servomotors: 6 min^{-1}
- Linear Servomotors: 15 mm/s

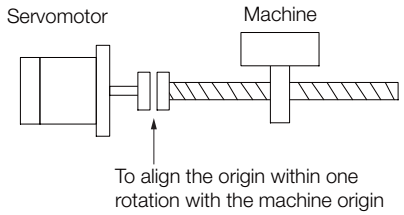

Preparations

Always check the following before you execute an origin search.

- The parameters must not be write prohibited.
- The main circuit power supply must be ON.
- There must be no alarms.
- There must be no hard wire base block (HWBB).
- The servo must be OFF.

Applicable Tools

The following table lists the tools that you can use to perform an origin search and the applicable tool functions.

Tool	Function	Reference
Digital Operator	Fn003	Σ-7-Series Digital Operator Operating Manual (Manual No.: SIEP S800001 33)
SigmaWin+	***Encoder Setting - Origin Search***	*Operating Procedure* on page 7-20

Operating Procedure

Use the following procedure to perform an origin search.

1. Click the Servo Drive Button in the workspace of the Main Window of the SigmaWin+.
2. Select **Search Origin** in the Menu Dialog Box.
   The Origin Search Dialog Box will be displayed.
3. Read the warnings and then click the **OK** Button.

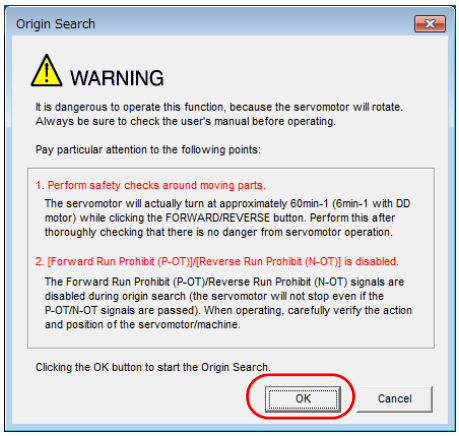

4. Click the **Servo ON** Button.

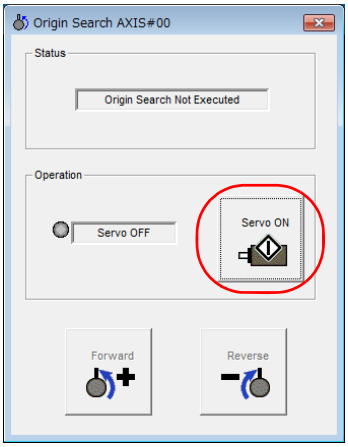

5. Click the **Forward** Button or the **Reverse** Button.
An origin search will be performed only while you hold down the mouse button. The motor will stop when the origin search has been completed.

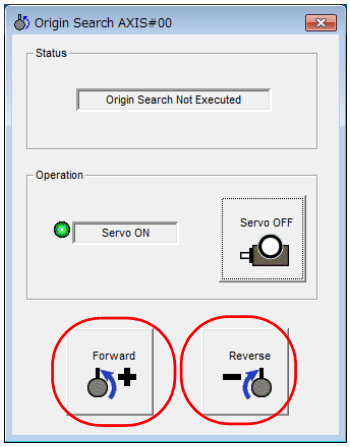

This concludes the origin search procedure.

7.6.3 Test without a Motor

A test without a motor is used to check the operation of the host controller and peripheral devices by simulating the operation of the Servomotor in the SERVOPACK, i.e., without actually operating a Servomotor. This test allows you to check wiring, debug the system, and verify parameters to shorten the time required for setup work and to prevent damage to the machine that may result from possible malfunctions. The operation of the Servomotor can be checked with this test regardless of whether the Servomotor is actually connected or not.

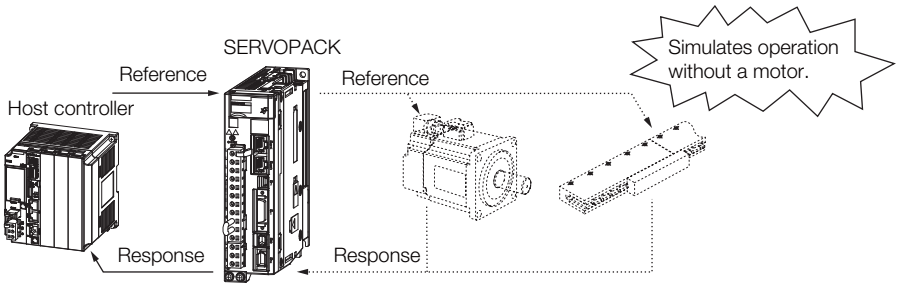

Use Pn00C = n.□□□X to enable or disable the test without a motor.

Parameter		Meaning	When Enabled	Classification
Pn00C	n.□□□0 (default setting)	Disable tests without a motor.	After restart	Setup
	n.□□□1	Enable tests without a motor.		

Information An asterisk is displayed on the status display of the Digital Operator while a test without a motor is being executed.

Motor Information and Encoder Information

The motor and encoder information is used during tests without a motor. The source of the information depends on the device connection status.

- Rotary Servomotor

Motor Connection Status	Information That Is Used	Source of Information
Connected	Motor information • Rated motor speed • Maximum motor speed	Information in the Servomotor that is connected
	Encoder information • Encoder resolution • Encoder type	
Not connected	Motor information • Rated motor speed • Maximum motor speed	• Setting of Pn000 = n.X□□□ (Rotary/Linear Startup Selection When Encoder Is Not Connected) • Rated motor speed and maximum motor speed The values previously saved in the SERVOPACK will be used for the rated motor speed and maximum motor speed. Use the monitor displays (Un020: Rated Motor Speed and Un021: Maximum Motor Speed) to check the values.
	Encoder information • Encoder resolution • Encoder type	• Encoder resolution: Setting of Pn00C = n.□□X□ (Encoder Resolution for Tests without a Motor) • Encoder type: Setting of Pn00C = n.□X□□ (Encoder Type Selection for Tests without a Motor)

If you use fully-closed loop control, the external encoder information is also used.

External Encoder Connection Status	Information That Is Used	Source of Information
Connected	External encoder information • Resolution • Encoder type	Information in the external encoder that is connected
Not connected		• Resolution: 256 • Encoder type: Incremental encoder

- Linear Servomotors

Motor Connection Status	Information That Is Used	Source of Information
Connected	Motor information	Information in the motor that is connected
	Linear encoder information • Resolution • Encoder pitch • Encoder type	Information in the linear encoder that is connected
Not connected	Motor information	Setting of Pn000 = n.X□□□ (Rotary/Linear Startup Selection When Encoder Is Not Connected)
	Linear encoder information • Resolution • Encoder pitch • Encoder type	• Resolution: 256 • Encoder pitch: Setting of Pn282 (Linear Encoder Pitch) • Encoder type: Setting of Pn00C = n.□X□□ (Encoder Type Selection for Tests without a Motor)

- Related Parameters

Parameter		Meaning	When Enabled	Classification
Pn000	n.0□□□ (default setting)	When an encoder is not connected, start as SERVOPACK for Rotary Servomotor.	After restart	Setup
	n.1□□□	When an encoder is not connected, start as SERVOPACK for Linear Servomotor.		

Pn282	Linear Encoder Pitch			Speed Position Force	
	Setting Range	Setting Unit	Default Setting	When Enabled	Classification
	0 to 6,553,600	0.01 μm	0	After restart	Setup

Parameter		Meaning	When Enabled	Classification
Pn00C	n.□□0□ (default setting)	Use 13 bits as encoder resolution for tests without a motor.	After restart	Setup
	n.□□1□	Use 20 bits as encoder resolution for tests without a motor.		
	n.□□2□	Use 22 bits as encoder resolution for tests without a motor.		
	n.□□3□	Use 24 bits as encoder resolution for tests without a motor.		
	n.□0□□ (default setting)	Use an incremental encoder for tests without a motor.		
	n.□1□□	Use an absolute encoder for tests without a motor.		

Motor Position and Speed Responses

For a test without a motor, the following responses are simulated for references from the host controller according to the gain settings for position or speed control.

- Servomotor position
- Motor speed
- External encoder position

The load model will be for a rigid system with the moment of inertia ratio that is set in Pn103.

Restrictions

The following functions cannot be used during the test without a motor.

- Regeneration and dynamic brake operation
- Brake output signal
- Items marked with "×" in the following utility function table

SigmaWin+		Digital Operator		Executable?		Reference
Menu Bar Button	SigmaWin+ Function Name	Fn No.	Utility Function Name	Motor Not Connected	Motor Connected	
Basic Functions	Initialize*1	Fn005	Initializing Parameters	○	○	page 5-11
	Software Reset	Fn030	Software Reset	○	○	page 6-48
	Product Information	Fn011	Display Servomotor Model	○	○	page 9-2
		Fn012	Display Software Version	○	○	
		Fn01E	Display SERVOPACK and Servomotor IDs	○	○	
		Fn01F	Display Servomotor ID from Feedback Option Module	○	○	
Encoder Setting	Reset Absolute Encoder	Fn008	Reset Absolute Encoder	×	○	page 5-51
	Multi-turn Limit Setup	Fn013	Multiturn Limit Setting after Multiturn Limit Disagreement Alarm	×	○	page 6-40
	Search Origin*2	Fn003	Origin Search	○	○	page 7-19
	Zero Point Position Setting	Fn020	Set Absolute Linear Encoder Origin	×	○	page 5-53
	Polarity Detection	Fn080	Polarity Detection	×	×	page 5-26
Trouble-shooting	Display Alarm	Fn000	Display Alarm History	○	○	page 12-43
		Fn006	Clear Alarm History	○	○	page 12-44
		Fn014	Reset Option Module Configuration Error	○	○	page 12-45
	Reset Motor Type Alarm	Fn021	Reset Motor Type Alarm	○	○	page 12-47
Operation	Jog	Fn002	Jog	○	○	page 7-7
	Program JOG Operation	Fn004	Jog Program	○	○	page 7-14
Tuning	Tuning - Autotuning without Host Reference	Fn201	Advanced Autotuning without Reference	×	×	page 8-24
	Tuning - Autotuning with Host Reference	Fn202	Advanced Autotuning with Reference	×	×	page 8-35
	Tuning - Custom Tuning	Fn203	One-Parameter Tuning	×	×	page 8-42
	Tuning - Custom Tuning - Adjust Anti-resonance Control	Fn204	Adjust Anti-resonance Control	×	×	page 8-51
	Tuning - Custom Tuning - Vibration Suppression	Fn205	Vibration Suppression	×	×	page 8-56
	Response Level Setting	Fn200	Tuning-less Level Setting	×	×	page 8-16
Diagnostic	Easy FFT	Fn206	Easy FFT	×	×	page 8-97

Continued on next page.

Continued from previous page.

SigmaWin+		Digital Operator		Executable?		Reference
Menu Bar Button	SigmaWin+ Function Name	Fn No.	Utility Function Name	Motor Not Connected	Motor Connected	
Others	Adjust the Analog Monitor Output	Fn00C	Adjust Analog Monitor Output Offset	○	○	page 9-9
		Fn00D	Adjust Analog Monitor Output Gain	○	○	
	Adjust the Motor Current Detection Offsets	Fn00E	Autotune Motor Current Detection Signal Offset	×	○	page 6-55
		Fn00F	Manually Adjust Motor Current Detection Signal Offset	×	○	
	Initialize Vibration Detection Level	Fn01B	Initialize Vibration Detection Level	×	×	page 6-51
	Write Prohibited Setting	Fn010	Write Prohibition Setting	○	○	page 5-8

*1. An **Initialize** Button will be displayed in the Parameter Editing Dialog Box.
*2. Cannot be used when connecting a Linear Servomotor.

7.7 Operation Using MECHATROLINK-III Commands

Refer to the following manual for information on MECHATROLINK-III commands.

Σ-7-Series MECHATROLINK-III Communications Standard Servo Profile Command Manual (Manual No.: SIEP S800001 31)

Information

The SERVOPACK's device code is as follows:

ID Code	Description	Data Size	Data Type	Support
02h	Device Code	4 bytes	Binary data	Yes
	02250002h (Σ-7S-series SERVOPACK with RJ-45 Connector (SGD7S-□□□□30□)) There is a specific code for each device.			

Tuning

8

This chapter provides information on the flow of tuning, details on tuning functions, and related operating procedures.

8.1 Overview and Flow of Tuning 8-4

8.1.1 Tuning Functions 8-5
8.1.2 Diagnostic Tool 8-6

8.2 Monitoring Methods 8-7

8.3 Precautions to Ensure Safe Tuning 8-8

8.3.1 Overtravel Settings 8-8
8.3.2 Torque Limit Settings 8-8
8.3.3 Setting the Position Deviation Overflow Alarm Level 8-8
8.3.4 Vibration Detection Level Setting 8-10
8.3.5 Setting the Position Deviation Overflow Alarm Level at Servo ON 8-10

8.4 Tuning-less Function 8-12

8.4.1 Application Restrictions 8-12
8.4.2 Operating Procedure 8-13
8.4.3 Troubleshooting Alarms 8-14
8.4.4 Parameters Disabled by Tuning-less Function . . 8-15
8.4.5 Automatically Adjusted Function Setting 8-15
8.4.6 Related Parameters 8-15

8.5 Estimating the Moment of Inertia 8-16

8.5.1 Outline 8-16
8.5.2 Restrictions 8-16
8.5.3 Applicable Tools 8-17
8.5.4 Operating Procedure 8-17

8.6 Autotuning without Host Reference 8-24
8.6.1 Outline 8-24
8.6.2 Restrictions 8-25
8.6.3 Applicable Tools 8-26
8.6.4 Operating Procedure 8-26
8.6.5 Troubleshooting Problems in Autotuning without a Host Reference 8-30
8.6.6 Automatically Adjusted Function Settings 8-32
8.6.7 Related Parameters 8-34

8.7 Autotuning with a Host Reference 8-35
8.7.1 Outline 8-35
8.7.2 Restrictions 8-36
8.7.3 Applicable Tools 8-36
8.7.4 Operating Procedure 8-37
8.7.5 Troubleshooting Problems in Autotuning with a Host Reference 8-40
8.7.6 Automatically Adjusted Function Settings 8-41
8.7.7 Related Parameters 8-41

8.8 Custom Tuning 8-42
8.8.1 Outline 8-42
8.8.2 Preparations 8-42
8.8.3 Applicable Tools 8-43
8.8.4 Operating Procedure 8-43
8.8.5 Automatically Adjusted Function Settings 8-48
8.8.6 Tuning Example for Tuning Mode 2 or 3 8-49
8.8.7 Related Parameters 8-50

8.9 Anti-Resonance Control Adjustment 8-51
8.9.1 Outline 8-51
8.9.2 Preparations 8-51
8.9.3 Applicable Tools 8-52
8.9.4 Operating Procedure 8-52
8.9.5 Related Parameters 8-54
8.9.6 Suppressing Different Vibration Frequencies with Anti-resonance Control 8-54

8.10 Vibration Suppression 8-56
8.10.1 Outline 8-56
8.10.2 Preparations 8-57
8.10.3 Applicable Tools 8-57
8.10.4 Operating Procedure 8-57
8.10.5 Setting Combined Functions 8-59
8.10.6 Related Parameters 8-59

8.11 Speed Ripple Compensation 8-60
8.11.1 Outline 8-60
8.11.2 Setting Up Speed Ripple Compensation 8-60
8.11.3 Setting Parameters 8-64

8.12 Additional Adjustment Functions 8-66
8.12.1 Gain Switching 8-66
8.12.2 Friction Compensation 8-70
8.12.3 Gravity Compensation 8-72
8.12.4 Current Control Mode Selection 8-73
8.12.5 Current Gain Level Setting 8-74
8.12.6 Speed Detection Method Selection 8-74
8.12.7 Speed Feedback Filter 8-74
8.12.8 Backlash Compensation 8-75

8.13 Manual Tuning 8-81
8.13.1 Tuning the Servo Gains 8-81
8.13.2 Compatible Adjustment Functions 8-91

8.14 Diagnostic Tools 8-95
8.14.1 Mechanical Analysis 8-95
8.14.2 Easy FFT 8-97

8.1 Overview and Flow of Tuning

Tuning is performed to optimize response by adjusting the servo gains in the SERVOPACK.

The servo gains are set using a combination of parameters, such as parameters for the speed loop gain, position loop gain, filters, friction compensation, and moment of inertia ratio. These parameters influence each other, so you must consider the balance between them.

The servo gains are set to stable settings by default. Use the various tuning functions to increase the response even further for the conditions of your machine.

The basic tuning procedure is shown in the following flowchart. Make suitable adjustments considering the conditions and operating requirements of your machine.

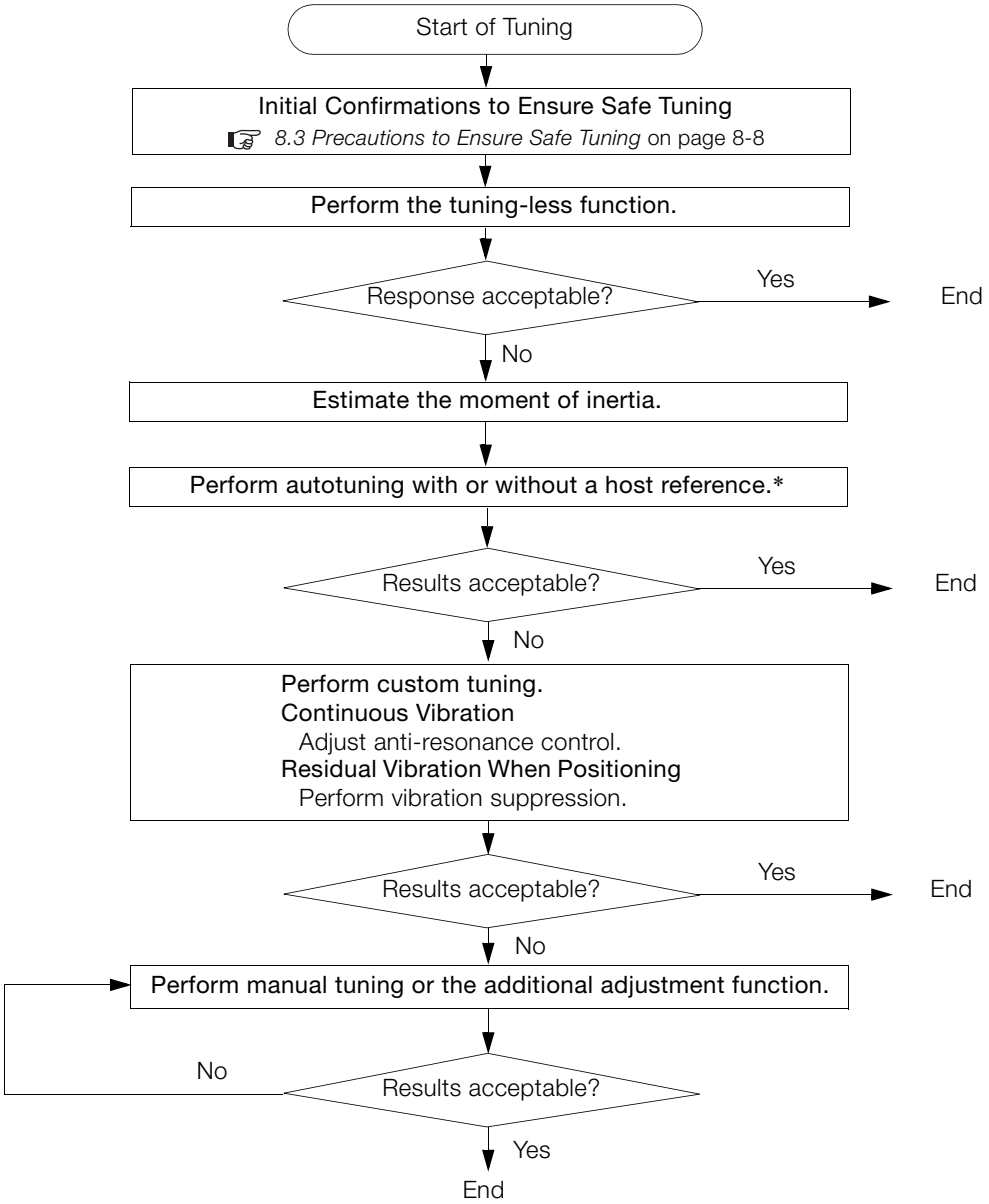

* If possible, perform autotuning with a host reference.
If a host controller is not available, set an operation pattern that is as close as possible to the host reference and perform autotuning without a host reference.
If an operation pattern that is close to the host reference is not possible, perform autotuning with a host reference while performing program jogging.

8.1.1 Tuning Functions

The following table provides an overview of the tuning functions.

Tuning Function	Outline	Applicable Control Methods	Reference
Tuning-less Function	This automatic adjustment function is designed to enable stable operation without servo tuning. This function can be used to obtain a stable response regardless of the type of machine or changes in the load. You can use it with the default settings.	Speed control or position control	page 8-12
Moment of Inertia Estimation	The moment of inertia ratio is calculated by operating the Servomotor a few times. The moment of inertia ratio that is calculated here is used in other tuning functions.	Speed control, position control, or torque control	page 8-16
Autotuning without Host Reference	The following parameters are automatically adjusted in the internal references in the SERVOPACK during automatic operation. • Gains (e.g., position loop gain and speed loop gain) • Filters (torque reference filter and notch filters) • Friction compensation • Anti-resonance control • Vibration suppression	Speed control or position control	page 8-24
Autotuning with Host Reference	The following parameters are automatically adjusted with the position reference input from the host controller while the machine is in operation. You can use this function for fine-tuning after you perform autotuning without a host reference. • Gains (e.g., position loop gain and speed loop gain) • Filters (torque reference filter and notch filters) • Friction compensation • Anti-resonance control • Vibration suppression	Position control	page 8-35
Custom Tuning	The following parameters are adjusted with the position reference or speed reference input from the host controller while the machine is in operation. • Gains (e.g., position loop gain and speed loop gain) • Filters (torque reference filter and notch filters) • Friction compensation • Anti-resonance control	Speed control or position control	page 8-42
Anti-resonance Control Adjustment	This function effectively suppresses continuous vibration.	Speed control or position control	page 8-51
Vibration Suppression	This function effectively suppresses residual vibration if it occurs when positioning.	Position control	page 8-56
Speed Ripple Compensation	This function reduces the ripple in the motor speed.	Speed control, position control, or torque control	page 8-60
Additional Adjustment Function	This function combines autotuning with custom tuning. You can use it to improve adjustment results.	Depends on the functions that you use.	page 8-66
Manual Tuning	You can manually adjust the servo gains to adjust the response.	Speed control, position control, or torque control	page 8-81

8.1.2 Diagnostic Tool

You can use the following tools to measure the frequency characteristics of the machine and set notch filters.

Diagnostic Tool	Outline	Applicable Control Methods	Reference
Mechanical Analysis	The machine is subjected to vibration to detect resonance frequencies. The measurement results are displayed as waveforms or numeric data.	Speed control, position control, or torque control	page 8-95
Easy FFT	The machine is subjected to vibration to detect resonance frequencies. The measurement results are displayed only as numeric data.	Speed control, position control, or torque control	page 8-97

8.2 Monitoring Methods

You can use the data tracing function of the SigmaWin+ or the analog monitor signals of the SERVOPACK for monitoring. If you perform custom tuning or manual tuning, always use the above functions to monitor the machine operating status and SERVOPACK signal waveform while you adjust the servo gains.

Check the adjustment results with the following response waveforms.

- Position Control

Item	Unit	
	Rotary Servomotor	Linear Servomotor
Torque reference	%	
Feedback speed	min^{-1}	mm/s
Position reference speed	min^{-1}	mm/s
Position deviation	Reference units	

- Speed Control

Item	Unit	
	Rotary Servomotor	Linear Servomotor
Torque reference	%	
Feedback speed	min^{-1}	mm/s
Reference speed	min^{-1}	mm/s

- Torque Control

Item	Unit	
	Rotary Servomotor	Linear Servomotor
Torque reference	%	
Feedback speed	min^{-1}	mm/s

8.3 Precautions to Ensure Safe Tuning

⚠ CAUTION

- Observe the following precautions when you perform tuning.
  - Do not touch the rotating parts of the motor when the servo is ON.
  - Before starting the Servomotor, make sure that an emergency stop can be performed at any time.
  - Make sure that trial operation has been successfully performed without any problems.
  - Provide an appropriate stopping device on the machine to ensure safety.

Perform the following settings in a way that is suitable for tuning.

8.3.1 Overtravel Settings

Overtravel settings are made to force the Servomotor to stop for a signal input from a limit switch when a moving part of the machine exceeds the safe movement range.

Refer to the following section for details.

☞ *5.11 Overtravel and Related Settings* on page 5-29

8.3.2 Torque Limit Settings

You can limit the torque that is output by the Servomotor based on calculations of the torque required for machine operation. You can use torque limits to reduce the amount of shock applied to the machine when problems occur, such as collisions or interference. If the torque limit is lower than the torque that is required for operation, overshooting or vibration may occur.

Refer to the following section for details.

☞ *6.7 Selecting Torque Limits* on page 6-28

8.3.3 Setting the Position Deviation Overflow Alarm Level

The position deviation overflow alarm is a protective function that is enabled when the SERVOPACK is used in position control.

If the alarm level is set to a suitable value, the SERVOPACK will detect excessive position deviation and will stop the Servomotor if the Servomotor operation does not agree with the reference.

The position deviation is the difference between the position reference value and the actual position.

You can calculate the position deviation from the position loop gain (Pn102) and the motor speed with the following formula.

- Rotary Servomotors

$$\text{Position deviation [reference units]} = \frac{\text{Motor speed [min}^{-1}\text{]}}{60} \times \frac{\text{Encoder resolution}^{*1}}{\text{Pn102 [0.1/s]/10}^{*2,\,*3}} \times \frac{\text{Pn210}}{\text{Pn20E}}$$

- Linear Servomotors

$$\text{Position deviation [reference units]} = \frac{\text{Motor speed [mm/s]}}{\text{Pn102 [0.1/s]/10}^{*2,\,*3}} \times \frac{\text{Resolution}}{\text{Linear encoder pitch [}\mu\text{m]/1,000}} \times \frac{\text{Pn210}}{\text{Pn20E}}$$

Position Deviation Overflow Alarm Level (Pn520) [setting unit: reference units]

- Rotary Servomotors

$$\text{Pn520} > \frac{\text{Maximum motor speed [min}^{-1}\text{]}}{60} \times \frac{\text{Encoder resolution}^{*1}}{\text{Pn102 [0.1/s]/10}^{*2,\,*3}} \times \frac{\text{Pn210}}{\text{Pn20E}} \times \underline{\underline{(1.2 \text{ to } 2)^{*4}}}$$

- Linear Servomotors

$$\text{Pn520} > \frac{\text{Maximum motor speed [mm/s]}}{\text{Pn102 [0.1/s]/10}^{*2,\,*3}} \times \frac{\text{Resolution}}{\text{Linear encoder pitch [μm]/1,000}} \times \frac{\text{Pn210}}{\text{Pn20E}} \times \underline{\underline{(1.2 \text{ to } 2)^{*4}}}$$

*1. Refer to the following section for details.
☞ *5.15 Electronic Gear Settings* on page 5-44

*2. When model following control (Pn140 = n.□□□1) is enabled, use the setting of Pn141 (Model Following Control Gain) instead of the setting of Pn102 (Position Loop Gain).

*3. To check the setting of Pn102 on the Digital Operator, change the parameter display setting to display all parameters (Pn00B = n.□□□1).

*4. The underlined coefficient "× (1.2 to 2)" adds a margin to prevent an A.d00 alarm (Position Deviation Overflow) from occurring too frequently.

If you set a value that satisfies the formula, an A.d00 alarm (Position Deviation Overflow) should not occur during normal operation.

If the Servomotor operation does not agree with the reference, position deviation will occur, an error will be detected, and the Servomotor will stop.

The following calculation example uses a Rotary Servomotor with a maximum motor speed of 6,000 and an encoder resolution of 16,777,216 (24 bits). Pn102 is set to 400. $\frac{\text{Pn210}}{\text{Pn20E}} = \frac{1}{16}$

$$\text{Pn520} = \frac{6{,}000}{60} \times \frac{16{,}777{,}216}{400/10} \times \frac{1}{16} \times 2$$

$$= 2{,}621{,}440 \times 2$$

$$= 5{,}242{,}880 \text{ (default setting of Pn520)}$$

If the acceleration/deceleration rate required for the position reference exceeds the tracking capacity of the Servomotor, the tracking delay will increase and the position deviation will no longer satisfy the above formulas. If this occurs, lower the acceleration/deceleration rate so that the Servomotor can follow the position reference or increase the position deviation overflow alarm level.

Related Parameters

Pn520	Position Deviation Overflow Alarm Level				Position
	Setting Range	Setting Unit	Default Setting	When Enabled	Classification
	1 to 1,073,741,823	1 reference unit	5,242,880	Immediately	Setup
Pn51E	Position Deviation Overflow Warning Level				Position
	Setting Range	Setting Unit	Default Setting	When Enabled	Classification
	10 to 100	1%	100	Immediately	Setup

Related Alarms

Alarm Number	Alarm Name	Alarm Meaning
A.d00	Position Deviation Overflow Alarm	This alarm is displayed when the position deviation exceeds the setting of Pn520 (Position Deviation Overflow Alarm Level).

Related Warnings

Warning Number	Warning Name	Warning Meaning
A.900	Position Deviation Overflow Warning	This warning occurs if the position deviation exceeds the specified percentage (Pn520 × Pn51E/100).

8.3.4 Vibration Detection Level Setting

You can set the vibration detection level (Pn312) to more accurately detect A.520 alarms (Vibration Alarm) and A.911 warnings (Vibration Warning) when vibration is detected during machine operation.

Set the initial vibration detection level to an appropriate value. Refer to the following section for details.

☞ *6.11 Initializing the Vibration Detection Level* on page 6-51

8.3.5 Setting the Position Deviation Overflow Alarm Level at Servo ON

If the servo is turned ON when there is a large position deviation, the Servomotor will attempt to return to the original position to bring the position deviation to 0, which may create a hazardous situation. To prevent this, you can set a position deviation overflow alarm level at servo ON to restrict operation.

The related parameters and alarms are given in the following tables.

Related Parameters

Pn526	Position Deviation Overflow Alarm Level at Servo ON			Position	
	Setting Range	Setting Unit	Default Setting	When Enabled	Classification
	1 to 1,073,741,823	1 reference unit	5,242,880	Immediately	Setup
Pn528	Position Deviation Overflow Warning Level at Servo ON			Position	
	Setting Range	Setting Unit	Default Setting	When Enabled	Classification
	10 to 100	1%	100	Immediately	Setup

- Rotary Servomotors

Pn529	Speed Limit Level at Servo ON			Position	
	Setting Range	Setting Unit	Default Setting	When Enabled	Classification
	0 to 10,000	1 min^{-1}	10,000	Immediately	Setup

- Linear Servomotors

Pn584	Speed Limit Level at Servo ON			Position	
	Setting Range	Setting Unit	Default Setting	When Enabled	Classification
	0 to 10,000	1 mm/s	10,000	Immediately	Setup

Related Alarms

Alarm Number	Alarm Name	Alarm Meaning
A.d01	Position Deviation Overflow Alarm at Servo ON	This alarm occurs if the servo is turned ON after the position deviation exceeded the setting of Pn526 (Excessive Position Deviation Alarm Level at Servo ON) while the servo was OFF.
A.d02	Position Deviation Overflow Alarm for Speed Limit at Servo ON	If position deviation remains in the deviation counter, the setting of Pn529 or Pn584 (Speed Limit Level at Servo ON) will limit the speed when the servo is turned ON. This alarm occurs if a position reference is input and the setting of Pn520 (Excessive Position Deviation Alarm Level) is exceeded.

Refer to the following section for information on troubleshooting alarms.

☞ *12.2.3 Resetting Alarms* on page 12-42

Related Warnings

Warning Number	Warning Name	Warning Meaning
A.901	Position Deviation Overflow Warning at Servo ON	This warning occurs if the servo is turned ON while the position deviation exceeds the specified percentage (Pn526 × Pn528/100).

8.4 Tuning-less Function

The tuning-less function performs autotuning to obtain a stable response regardless of the type of machine or changes in the load. Autotuning is started when the servo is turned ON.

⚠ CAUTION

- The tuning-less function is disabled during torque control.
- The Servomotor may momentarily emit a sound the first time the servo is turned ON after the Servomotor is connected to the machine. This sound is caused by setting the automatic notch filter. It does not indicate a problem. The sound will not be emitted from the next time the servo is turned ON.
- The Servomotor may vibrate if it exceeds the allowable load moment of inertia.
  If that occurs, set the tuning-less load level to 2 (Pn170 = n.2□□□) or reduce the Tuning-less Rigidity Level (Pn170 = n.□X□□).
- To ensure safety, make sure that you can perform an emergency stop at any time when you execute the tuning-less function.

8.4.1 Application Restrictions

The following application restrictions apply to the tuning-less function.

Function	Executable?	Remarks
Vibration Detection Level Initialization	○	–
Moment of Inertia Estimation	×	Disable the tuning-less function (Pn170 = n.□□□0) before you execute moment of inertia estimation.
Autotuning without Host Reference	×	Disable the tuning-less function (Pn170 = n.□□□0) before you execute autotuning without a host reference.
Autotuning with Host Reference	×	–
Custom Tuning	×	–
Anti-Resonance Control Adjustment	×	–
Vibration Suppression	×	–
Easy FFT	○	The tuning-less function is disabled while you execute Easy FFT and then it is enabled when Easy FFT has been completed.
Friction Compensation	×	–
Gain Selection	×	–
Mechanical Analysis	○	The tuning-less function is disabled while you execute mechanical analysis and then it is enabled when mechanical analysis has been completed.

* ○: Yes ×: No

8.4.2 Operating Procedure

The tuning-less function is enabled in the default settings. No specific procedure is required. You can use the following parameter to enable or disable the tuning-less function.

Parameter		Meaning	When Enabled	Classification
Pn170	n.□□□0	Disable tuning-less function.	After restart	Setup
	n.□□□1 (default setting)	Enable tuning-less function.		
	n.□□0□ (default setting)	Use for speed control.		
	n.□□1□	Use for speed control and use host controller for position control.		

When you enable the tuning-less function, you can select the tuning-less type. Normally, set Pn14F to n.□□2□ (Use tuning-less type 3) (default setting). If compatibility with previous models is required, set Pn14F to n.□□0□ (Use tuning-less type 1) or n.□□1□ (Use tuning-less type 2).

Parameter		Meaning	When Enabled	Classification
Pn14F	n.□□0□	Use tuning-less type 1.	After restart	Tuning
	n.□□1□	Use tuning-less type 2. (The noise level is improved more than with tuning-less type 1.)		
	n.□□2□ (default setting)	Use tuning-less type 3.		

Tuning-less Level Settings

If vibration or other problems occur, change the tuning-less levels. To change the tuning-less levels, use the SigmaWin+.

◆ Preparations

Always check the following before you set the tuning-less levels.

- The tuning-less function must be enabled (Pn170 = n.□□□1).
- The test without a motor function must be disabled (Pn00C = n.□□□0).

◆ Procedure

Use the following procedure to set the tuning-less levels.

In addition to the following procedure, you can also set the parameters directly. Refer to *Related Parameters*, below, for the parameters to set.

1. Click the Servo Drive Button in the workspace of the Main Window of the SigmaWin+.
2. Select **Response Level Setting** in the Menu Dialog Box.
   The Tuning-less Level Setting-Adj Dialog Box will be displayed.

3. Click the ▲ or ▼ Button to adjust the tuning-less level setting. Increase the tuning-less level setting to increase the response. Decrease the tuning-less level setting to suppress vibration.
The default response level setting is 4.

Tuning-less Level	Description	Remarks
7	Response level: High	You cannot select these levels if tuning-less type 1 or 2 (Pn14F = n.□□0□ or n.□□1□) is used.
6		
5		
4 (default setting)		–
3		
2		
1		
0	Response level: Low	

4. Click the **Completed** Button.
The adjustment results will be saved in the SERVOPACK.

◆ Related Parameters

■ Tuning-less Rigidity Level

If you use tuning-less type 1 or 2 (Pn14F = n.□□0□ or n.□□1□), set the tuning-less level to between 0 and 4 (Pn170 = n.□0□□ to n.□4□□). Do not set the tuning-less level to between 5 and 7 (Pn170 = n.□5□□ to n.□7□□).

Parameter		Description	When Enabled	Classification
Pn170	n.□0□□	Tuning-less rigidity level 0 (low rigidity)	Immediately	Setup
	n.□1□□	Tuning-less rigidity level 1		
	n.□2□□	Tuning-less rigidity level 2		
	n.□3□□	Tuning-less rigidity level 3		
	n.□4□□ (default setting)	Tuning-less rigidity level 4		
	n.□5□□	Tuning-less rigidity level 5		
	n.□6□□	Tuning-less rigidity level 6		
	n.□7□□	Tuning-less rigidity level 7 (high rigidity)		

■ Tuning-less Load Level

Parameter		Description	When Enabled	Classification
Pn170	n.0□□□	Tuning-less load level 0	Immediately	Setup
	n.1□□□ (default setting)	Tuning-less load level 1		
	n.2□□□	Tuning-less load level 2		

8.4.3 Troubleshooting Alarms

An A.521 alarm (Autotuning Alarm) will occur if a resonant sound occurs or if excessive vibration occurs during position control. If an alarm occurs, implement the following measures.

- Resonant Sound
  Decrease the setting of Pn170 = n.X□□□ or the setting of Pn170 = n.□X□□.
- Excessive Vibration during Position Control
  Increase the setting of Pn170 = n.X□□□ or decrease the setting of Pn170 = n.□X□□.

8.4.4 Parameters Disabled by Tuning-less Function

When the tuning-less function is enabled (Pn170 = n.□□□1) (default setting), the parameters in the following table are disabled.

Item	Parameter Name	Parameter Number
Gain-Related Parameters	Speed Loop Gain Second Speed Loop Gain	Pn100 Pn104
	Speed Loop Integral Time Constant Second Speed Loop Integral Time Constant	Pn101 Pn105
	Position Loop Gain Second Position Loop Gain	Pn102 Pn106
	Moment of Inertia Ratio	Pn103
Advanced Control-Related Parameters	Friction Compensation Function Selection	Pn408 = n.X□□□
	Anti-Resonance Control Selection	Pn160= n.□□□X
Gain Selection-Related Parameters	Gain Switching Selection	Pn139= n.□□□X

The tuning-less function is disabled during torque control, Easy FFT, and mechanical analysis for a vertical axis. The gain-related parameters in the above table are enabled for torque control, Easy FFT, and mechanical analysis. Of these, Pn100, Pn103, and Pn104 are enabled for torque control.

8.4.5 Automatically Adjusted Function Setting

You can also automatically adjust notch filters.

Normally, set Pn460 to n.□1□□ (Adjust automatically) (default setting). Vibration is automatically detected and a notch filter is set.
Set Pn460 to n.□0□□ (Do not adjust automatically) only if you do not change the setting of the notch filter before you execute the tuning-less function.

Parameter		Meaning	When Enabled	Classification
Pn460	n.□0□□	Do not adjust the second stage notch filter automatically when the tuning-less function is enabled or during execution of autotuning without a host reference, autotuning with a host reference, and custom tuning.	Immediately	Tuning
	n.□1□□ (default setting)	Adjust the second stage notch filter automatically when the tuning-less function is enabled or during execution of autotuning without a host reference, autotuning with a host reference, and custom tuning.		

8.4.6 Related Parameters

The following parameters are automatically adjusted when you execute the tuning-less function.

Do not manually change the settings of these parameters after you have enabled the tuning-less function.

Parameter	Name
Pn401	First Stage First Torque Reference Filter Time Constant
Pn40C	Second Stage Notch Filter Frequency
Pn40D	Second Stage Notch Filter Q Value

8.5 Estimating the Moment of Inertia

This section describes how the moment of inertia is calculated.

The moment of inertia ratio that is calculated here is used in other tuning functions. You can also estimate the moment of inertia during autotuning without a host reference. Refer to the following section for the procedure.

☞ *8.6.4 Operating Procedure* on page 8-26

8.5.1 Outline

The moment of inertia during operation is automatically calculated by the SERVOPACK for round-trip (forward and reverse) operation. A reference from the host controller is not used.

The moment of inertia ratio (i.e., the ratio of the load moment of inertia to the motor moment of inertia) is a basic parameter for adjusting gains. It must be set as accurately as possible.

Although the load moment of inertia can be calculated from the weight and structure of the mechanisms, doing so is very troublesome and calculating it accurately can be very difficult with the complex mechanical structures that are used these days. With moment of inertia estimation, you can get an accurate load moment of inertia simply by operating the Servomotor in the actual system in forward and reverse a few times.

The Servomotor is operated with the following specifications.

- Maximum speed: ±1,000 min^{-1} (can be changed)
- Acceleration rate: ±20,000 min^{-1}/s (can be changed)
- Travel distance: ±2.5 rotations max. (can be changed)

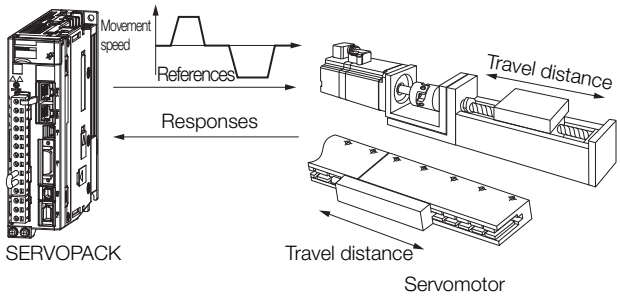

Note: Execute moment of inertia estimation after jogging to a position that ensures a suitable range of motion.

8.5.2 Restrictions

The following restrictions apply to estimating the moment of inertia.

Systems for which Execution Cannot Be Performed

- When the machine system can move only in one direction
- When the range of motion is 0.5 rotations or less

Systems for Which Adjustments Cannot Be Made Accurately

- When a suitable range of motion is not possible
- When the moment of inertia changes within the set operating range
- When the machine has high dynamic friction
- When the rigidity of the machine is low and vibration occurs when positioning is performed
- When the position integration function is used
- When proportional control is used

  Note: If you specify calculating the moment of inertia, an error will occur if V_PPI in the servo command output signals (SVCMD_IO) changes to specify the proportional action during moment of inertia estimation.
- When mode switching is used

  Note: If you specify moment of inertia estimation, mode switching will be disabled and PI control will be used while the moment of inertia is being calculated. Mode switching will be enabled after moment of inertia estimation has been completed.
- When speed feedforward or torque feedforward is input

Preparations

Always check the following before you execute moment of inertia estimation.

- The main circuit power supply must be ON.
- There must be no overtravel.
- The servo must be OFF.
- The control method must not be set to torque control.
- The gain selection switch must be set to manual gain selection (Pn139 = n.□□□0).
- The first gains must be selected.
- The test without a motor function must be disabled (Pn00C = n.□□□0).
- There must be no alarms or warnings.
- There must be no hard wire base block (HWBB).
- The parameters must not be write prohibited.
- The tuning-less function must be disabled (Pn170 = n.□□□0).

8.5.3 Applicable Tools

The following table lists the tools that you can use to estimate the moment of inertia and the applicable tool functions.

Tool	Function	Operating Procedure Reference
Digital Operator	You cannot estimate the moment of inertia from the Digital Operator.	
SigmaWin+	***Tuning - Tuning***	☞ *8.5.4 Operating Procedure* on page 8-17

8.5.4 Operating Procedure

Use the following procedure to set the moment of inertia ratio.

⚠ WARNING

- **Estimating the moment of inertia requires operating the Servomotor and therefore presents hazards. Observe the following precaution.**
  - Confirm safety around moving parts.
    This function involves automatic operation with vibration. Make sure that you can perform an emergency stop (to turn OFF the power supply) at any time. There will be movement in both directions within the set range of movement. Check the range of movement and the directions and implement protective controls for safety, such as the overtravel functions.

⚠ CAUTION

- Be aware of the following points if you cancel the moment of inertia estimation while the Servomotor is operating.
  - If you cancel operation with the **Servo OFF** Button, the Servomotor will stop according to setting of the Servo OFF stopping method (Pn001 = n.□□□X).
  - If you cancel operation with the **Cancel** Button, the Servomotor will decelerate to a stop and then enter a zero-clamped state.

1. Click the Servo Drive Button in the workspace of the Main Window of the SigmaWin+.

2. Select **Tuning** in the Menu Dialog Box.
   The Tuning Dialog Box will be displayed.
   Click the **Cancel** Button to cancel tuning.

3. Click the **Execute** Button.

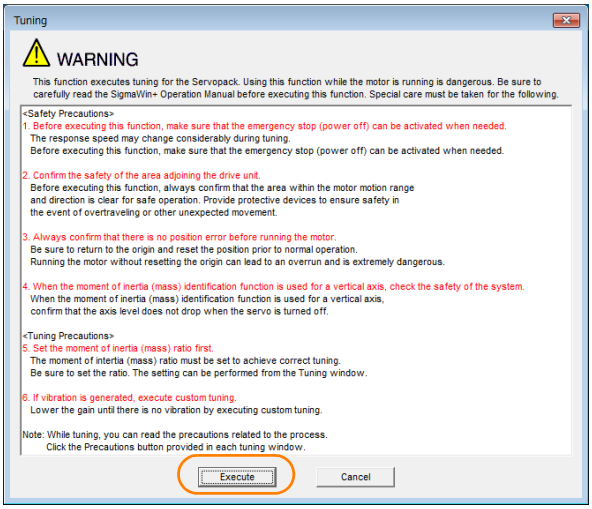

4. Click the **Execute** Button.

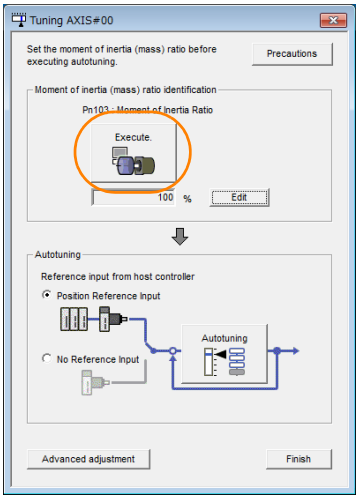

5. Set the conditions as required.

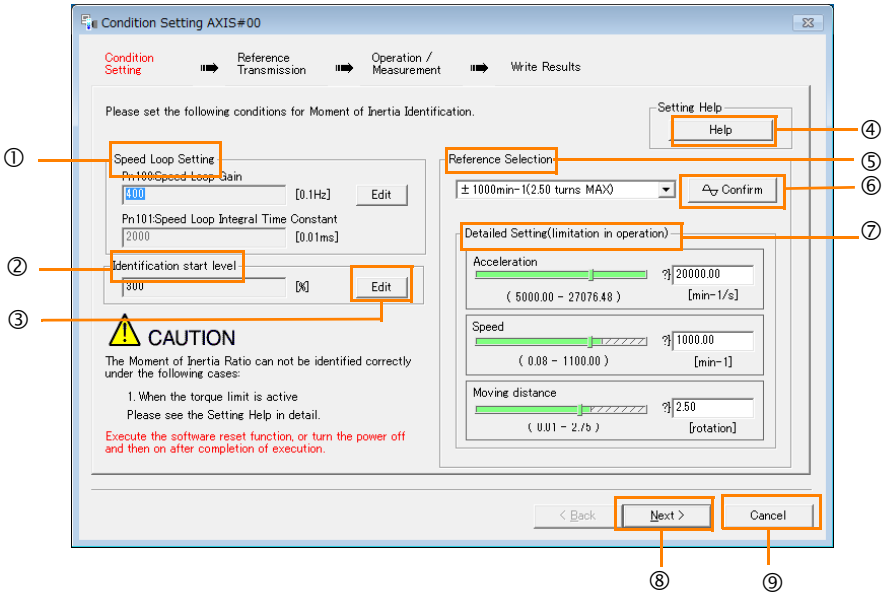

① **Speed Loop Setting** Area
Make the speed loop settings in this area.
If the speed loop response is too bad, it will not be possible to measure the moment of inertia ratio accurately.
The values for the speed loop response that are required for moment of inertia estimation are set for the default settings. It is normally not necessary to change these settings.
If the default speed loop gain is too high for the machine (i.e., if vibration occurs), lower the setting. It is not necessary to increase the setting any farther.

② **Identification Start Level** Group
This is the setting of the moment of inertia calculation starting level.
If the load is large or the machine has low rigidity, the torque limit may be applied, causing moment of inertia estimation to fail.
If that occurs, estimation may be possible if you double the setting of the start level.

③ **Edit** Buttons
Click the button to display a dialog box to change the settings related to the speed loop or estimation start level.

④ **Help** Button
Click this button to display guidelines for setting the reference conditions. Make the following settings as required.

- Operate the Servomotor to measure the load moment of inertia of the machine in comparison with the rotor moment of inertia.
- Set the operation mode, reference pattern (maximum acceleration rate, maximum speed, and maximum travel distance), and speed loop-related parameters.
- Correct measurement of the moment of inertia ratio may not be possible depending on the settings. Set suitable settings using the measurement results as reference.

⑤ **Reference Selection** Area
Either select the reference pattern for estimation processing from the box, or set the values in the **Detailed Setting** Group. Generally speaking, the larger the maximum acceleration rate is, the more accurate the moment of inertia estimation will be.
Set the maximum acceleration range within the possible range of movement considering the gear ratio, e.g., the pulley diameters or ball screw pitch.

⑥ **Confirm** Button
Click this button to display the Reference Confirmation Dialog Box.

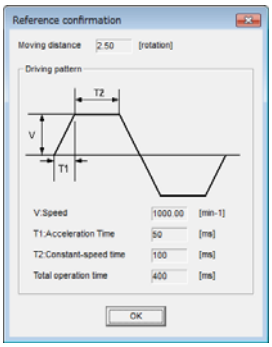

⑦ **Detailed Setting** Area
You can change the settings by moving the bars or directly inputting the settings to create the required reference pattern.
⑧ **Next** Button
Click this button to display the Reference Transmission Dialog Box.
⑨ **Cancel** Button
Click this button to return to the Tuning Dialog Box.

⚠ CAUTION

- The travel distance is the distance for one operation in the forward or reverse direction. During multiple operations, the operation starting position may move in one direction or the other. Confirm the possible operating range for each measurement or operation.
- Depending on the parameter settings and the moment of inertia of the machine, overshooting and undershooting may occur and may cause the maximum speed setting to be exceeded temporarily. Allow sufficient leeway in the settings.

Information

When Measurement Is Not Correct
Estimating the moment of inertia ratio cannot be performed correctly if the torque limit is activated. Adjust the limits or reduce the acceleration rate in the reference selection so that the torque limit is not activated.

6. Click the **Next** Button.
The Reference Transmission Dialog Box will be displayed.

7. Click the **Start** Button.

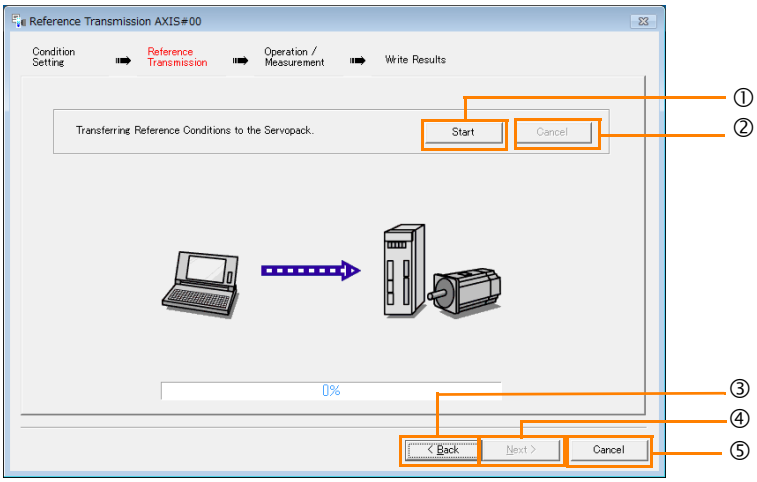

① **Start** Button
The reference conditions will be transferred to the SERVOPACK. A progress bar will show the progress of the transfer.
② **Cancel** Button
The **Cancel** Button is enabled only while data is being transferred to the SERVOPACK. You cannot use it after the transfer has been completed.

③ **Back** Button
This button returns you to the Condition Setting Dialog Box. It is disabled while data is being transferred.
④ **Next** Button
This button is enabled only when the data has been transferred correctly. You cannot use it if an error occurs or if you cancel the transfer before it is completed.
Click the **Next** Button to display the Operation/Measurement Dialog Box.
⑤ **Cancel** Button
This button cancels processing and returns you to the Tuning Dialog Box.

8. Click the **Next** Button.
The Operation/Measurement Dialog Box will be displayed.

9. Click the **Servo On** Button.

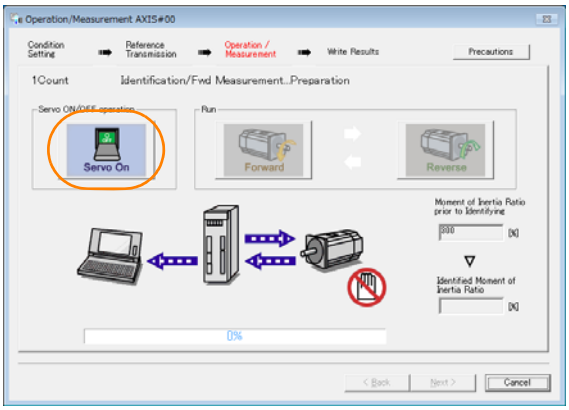

10. Click the **Forward** Button.
The Servomotor shaft will rotate in the forward direction and the measurement will start. After the measurement and data transfer have been completed, the **Reverse** Button will be displayed in color.

11. Click the **Reverse** Button.

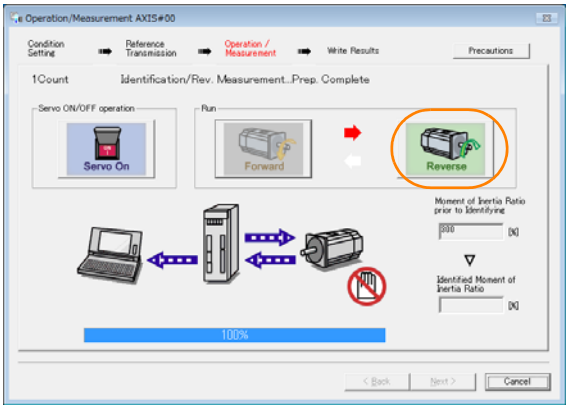

The Servomotor shaft will rotate in the reverse direction and the measurement will start. After the measurement and data transfer have been completed, the **Forward** Button will be displayed in color.

12. Repeat steps 9 to 11 until the **Next** Button is enabled.
Measurements are performed from 2 to 7 times and then verified. The number of measurements is displayed in upper left corner of the dialog box. A progress bar at the bottom of the dialog box will show the progress of the transfer each time.

13. When the measurements have been completed, click the **Servo On** Button to turn OFF the servo.

14. Click the **Next** Button.
The Write Results Dialog Box will be displayed.

Information If you click the **Next** Button before you turn OFF the servo, the following Dialog Box will be displayed. Click the **OK** Button to turn OFF the servo.

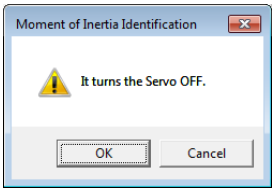

15. Click the **Writing Results** Button.

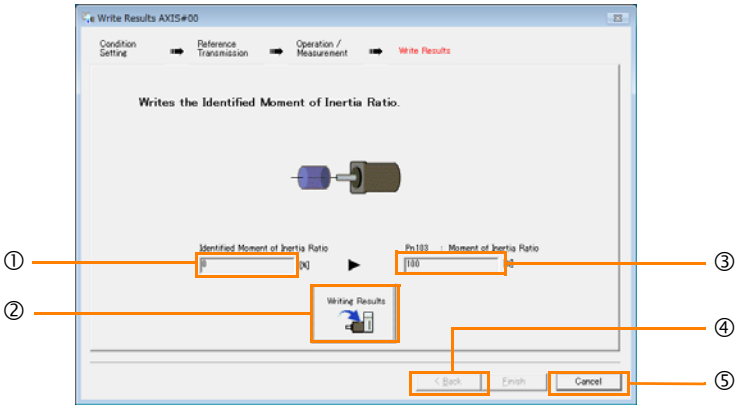

① **Identified Moment of Inertia Ratio** Box
The moment of inertia ratio that was found with operation and measurements is displayed here.
② **Writing Results** Button
If you click this button, Pn103 (Moment of Inertia Ratio) in the SERVOPACK is set to the value that is displayed for the identified moment of inertia ratio.
③ **Pn103: Moment of Inertia Ratio** Box
The value that is set for the parameter is displayed here.
After you click the **Writing Results** Button, the value that was found with operation and measurements will be displayed as the new setting.
④ **Back** Button
This button is disabled.
⑤ **Cancel** Button
This button will return you to the Tuning Dialog Box.

16. Confirm that the **Identified Moment of Inertia Ratio** Box and the **Pn103: Moment of Inertia Ratio** Box show the same value and then click the **Finish** Button.

17. Click the **OK** Button.

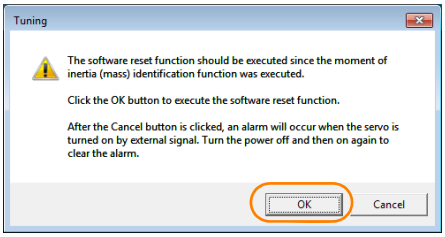

18. Click the **Execute** Button.

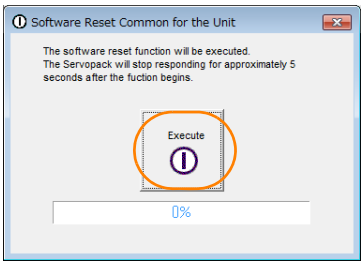

If the setting of the moment of inertia ratio (Pn103) was changed, the new value will be saved and the Tuning Dialog Box will be displayed again.

This concludes the procedure to estimate the moment of inertia ratio.

8.6 Autotuning without Host Reference

This section describes autotuning without a host reference.

Important

- Autotuning without a host reference performs adjustments based on the setting of the speed loop gain (Pn100). Therefore, precise adjustments cannot be made if there is vibration when adjustments are started. Make adjustments after lowering the speed loop gain (Pn100) until vibration is eliminated.
- You cannot execute autotuning without a host reference if the tuning-less function is enabled (Pn170 = n.□□□1 (default setting)). Disable the tuning-less function (Pn170 = n.□□□0) before you execute autotuning without a host reference.
- If you change the machine load conditions or drive system after you execute autotuning without a host reference and then you execute autotuning without a host reference with moment of inertia estimation specified, use the following parameter settings. If you execute autotuning without a host reference for any other conditions, the machine may vibrate and may be damaged.
  Pn140 = n.□□□0 (Do not use model following control.)
  Pn160 = n.□□□0 (Do not use anti-resonance control.)
  Pn408 = n.00□0 (Disable friction compensation, first stage notch filter, and second stage notch filter.)
  Note: If you are using the Digital Operator and the above parameters are not displayed, change the parameter display setting to display all parameters (Pn00B = n.□□□1) and then turn the power supply OFF and ON again.

8.6.1 Outline

For autotuning without a host reference, operation is automatically performed by the SERVOPACK for round-trip (forward and reverse) operation to adjust for machine characteristics during operation. A reference from the host controller is not used.

The following items are adjusted automatically.

- Moment of inertia ratio
- Gains (e.g., speed loop gain and position loop gain)
- Filters (torque reference filter and notch filters)
- Friction compensation
- Anti-resonance control
- Vibration suppression (only for mode 2 or 3)

Refer to the following section for details on the parameters that are adjusted.

☞ *8.6.7 Related Parameters* on page 8-34

The Servomotor is operated with the following specifications.

Maximum speed	Rated motor speed × $\frac{2}{3}$	
Acceleration Torque	Rated motor torque: Approx. 100% Note: The acceleration torque depends on the setting of the moment of inertia ratio (Pn103), and the influences of machine friction and external disturbance.	
Travel Distance	Rotary Servomotors	You can set the desired travel distance. The default setting is for a value equivalent to 3 Servomotor shaft rotations.
	Direct Drive Servomotors	You can set the desired travel distance. The default setting is for a value equivalent to 0.3 rotations.
	Linear Servomotors	You can set the desired travel distance in increments of 1,000 reference units. (The default setting is for 90 mm.)

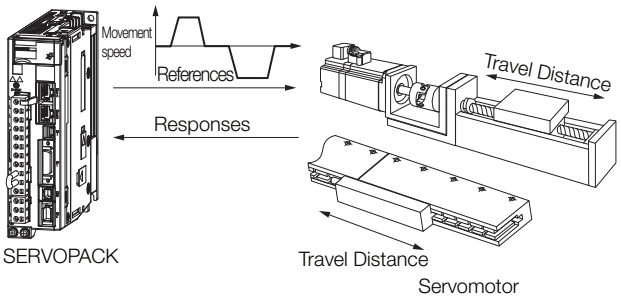

Note: Execute autotuning without a host reference after jogging to a position that ensures a suitable range of motion.

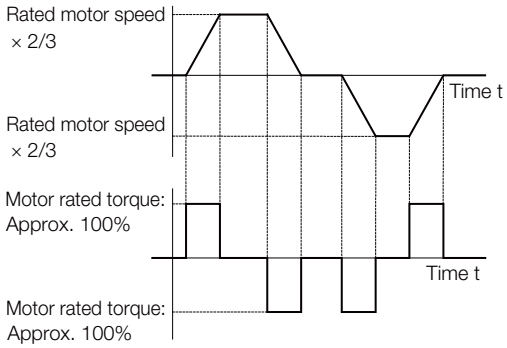

Example of Automatic Operation Pattern

⚠ WARNING

- **Autotuning without a host reference requires operating the Servomotor and therefore presents hazards. Observe the following precaution.**
  - Confirm safety around moving parts.
    This function involves automatic operation with vibration. Make sure that you can perform an emergency stop (to turn OFF the power supply) at any time. There will be movement in both directions within the set range of movement. Check the range of movement and the directions and implement protective controls for safety, such as the overtravel functions.

8.6.2 Restrictions

The following restrictions apply to autotuning without a host reference.

If you cannot use autotuning without a host reference because of these restrictions, use autotuning with a host reference or custom tuning. Refer to the following sections for details.

☞ *8.7 Autotuning with a Host Reference* on page 8-35
☞ *8.8 Custom Tuning* on page 8-42

Systems for Which Execution Cannot Be Performed

- When the machine system can move only in one direction
- When the range of motion is 0.5 rotations or less

Systems for Which Adjustments Cannot Be Made Accurately

- When a suitable range of motion is not possible
- When the moment of inertia changes within the set operating range
- When the machine has high friction
- When the rigidity of the machine is low and vibration occurs when positioning is performed
- When the position integration function is used
- When proportional control is used

  Note: If you specify calculating the moment of inertia, an error will occur if V_PPI in the servo command output signals (SVCMD_IO) changes to specify the proportional action during moment of inertia estimation.
- When mode switching is used

  Note: If you specify moment of inertia estimation, mode switching will be disabled and PI control will be used while the moment of inertia is being calculated. Mode switching will be enabled after moment of inertia estimation has been completed.
- When speed feedforward or torque feedforward is input
- When the positioning completed width (Pn522) is too narrow

Preparations

Always check the following before you execute autotuning without a host reference.

- The main circuit power supply must be ON.
- There must be no overtravel.
- The servo must be OFF.
- The control method must not be set to torque control.
- The gain selection switch must be set to manual gain selection (Pn139 = n.□□□0).
- The first gains must be selected.
- The test without a motor function must be disabled (Pn00C = n.□□□0).
- There must be no alarms or warnings.
- There must be no hard wire base block (HWBB).
- The parameters must not be write prohibited.
- The tuning-less function must be disabled (Pn170 = n.□□□0), or the tuning-less function must be enabled (Pn170 = n.□□□1) (default setting) and moment of inertia estimation must be specified.
- If you execute autotuning without a host reference during speed control, set the mode to 1.

Information

- If you start autotuning without a host reference while the SERVOPACK is in speed control for mode 2 or 3, the SERVOPACK will change to position control automatically to perform autotuning without a host reference. The SERVOPACK will return to speed control after autotuning has been completed.

8.6.3 Applicable Tools

The following table lists the tools that you can use to perform autotuning without a host reference and the applicable tool functions.

Tool	Function	Operating Procedure Reference
Digital Operator	Fn201	Σ-7-Series Digital Operator Operating Manual (Manual No.: SIEP S800001 33)
SigmaWin+	***Tuning - Tuning***	*8.6.4 Operating Procedure* on page 8-26

8.6.4 Operating Procedure

Use the following procedure to perform autotuning without a host reference.

⚠ CAUTION

- If you specify not estimating the moment of inertia, set the moment of inertia ratio (Pn103) correctly. If the setting greatly differs from the actual moment of inertia ratio, normal control of the machine may not be possible, and vibration may result.
- If you are using an MP3000-series Controller for phase control, set the mode selection to 1. If 2 or 3 is selected for the mode, correct phase control may not be possible.

1. Confirm that the moment of inertia ratio (Pn103) is set correctly.

2. Click the Servo Drive Button in the workspace of the Main Window of the SigmaWin+.

3. Select **Tuning** in the Menu Dialog Box.
   The Tuning Dialog Box will be displayed.
   Click the **Cancel** Button to cancel tuning.

4. Click the **Execute** Button.

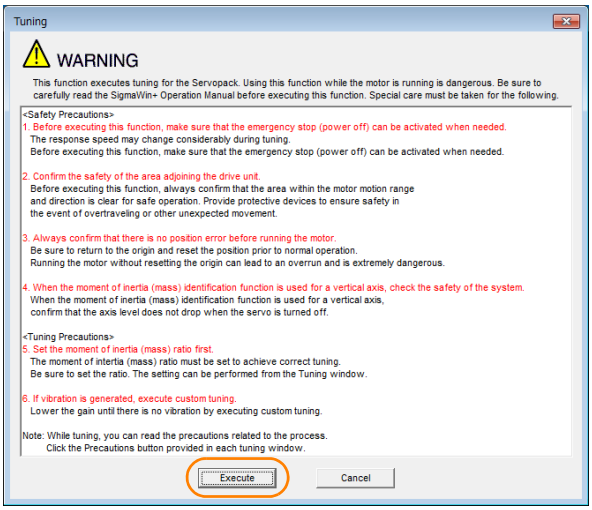

5. Select the **No Reference Input** Option in the **Autotuning** Area and then click the **Autotuning** Button.

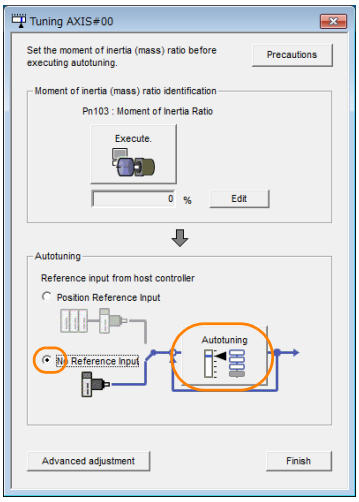

Information When the following dialog box is displayed, click the **OK** Button and then confirm that the correct moment of inertia ratio is set in Pn103 (Moment of Inertia Ratio).

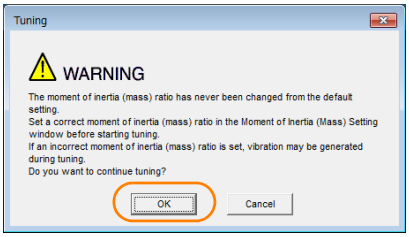

6. Set the conditions in the **Switching the load moment of inertia (load mass) identification** Box, the **Mode selection** Box, the **Mechanism selection** Box, and the **Distance Box**, and then click the **Next** Button.

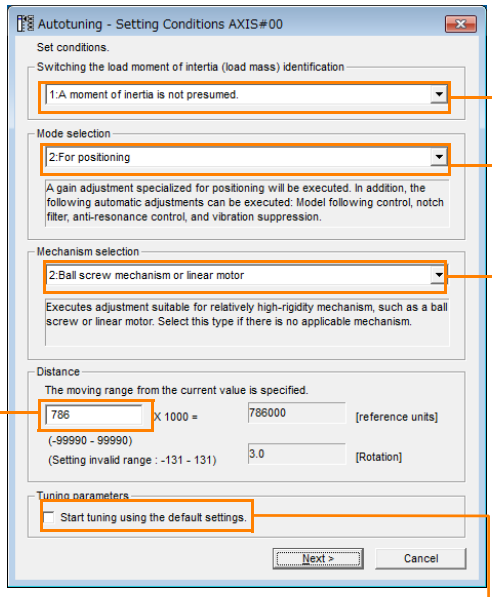

- **Switching the load moment of inertia (load mass) identification** Box
  Specify whether to estimate the moment of inertia.
  0: A moment of inertia is presumed. (default setting)
  1: A moment of inertia is not presumed.

- **Mode selection** Box
  Set the mode.

Mode Selection	Description
1: Standard	Standard gain adjustment is performed. In addition to gain adjustment, notch filters and anti-resonance control are automatically adjusted.
2: For positioning	Tuning is performed for positioning applications. In addition to gain adjustment, model following control, notch filters, anti-resonance control, and vibration suppression are automatically adjusted.
3: For positioning especially to prevent overshooting	Tuning is performed for positioning applications with emphasis on eliminating overshooting. In addition to gain adjustment, notch filters, anti-resonance control, and vibration suppression are automatically adjusted.

- **Distance** Box
  Set the travel distance.
  Movement range: -99,990,000 to +99,990,000 [reference units]
  Minimum setting increment for travel distance: 1,000 [reference units]
  Negative values are for reverse operation and positive values are for forward operation from the current position.
  Default settings:
  Rotary Servomotors: Approx. 3 rotations
  Direct Drive Servomotors: Approx. 0.3 rotations
  Linear Servomotors: Approx 90 mm
  Set the distance to the following values or higher. To ensure tuning precision, we recommend that you use approximately the default distance setting.
  Rotary Servomotors: 0.5 rotations
  Direct Drive Servomotors: 0.05 rotations
  Linear Servomotors: 5 mm

- **Mechanism selection** Box
  Select the type according to the machine element to drive.
  If there is noise or if the gain does not increase, better results may be obtained by changing the rigidity type.
  Select the type according to the following guidelines.

Mechanism Selection	Description
1: Belt mechanism	Tuning is performed for a mechanism with relatively low rigidity, e.g., a belt.
2: Ball screw mechanism or linear motor	Tuning is performed for a mechanism with relatively high rigidity, e.g., a ball screw or Linear Servomotor. Use this setting if there is no other appropriate setting.
3: Rigid model	Tuning is performed for a mechanism with high rigidity, e.g., a rigid body system.

- **Tuning parameters** Box
  Specify the parameters to use for tuning.
  If you select the **Start tuning using the default settings** Check Box, the tuning parameters will be returned to the default settings before tuning is started.

7. Click the **Servo ON** Button.

8. Click the **Start tuning** Button.

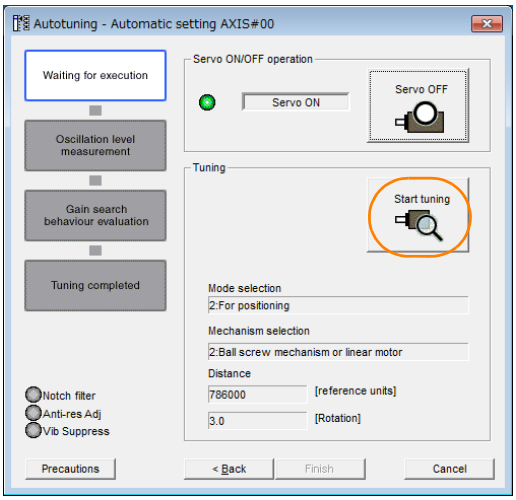

9. Confirm safety around moving parts and click the **Yes** Button.

The Servomotor will start operating and tuning will be executed.
Vibration that occurs during tuning will be detected automatically and suitable settings will be made for that vibration. When the settings have been completed, the indicators for the functions that were used will light at the lower left of the dialog box.

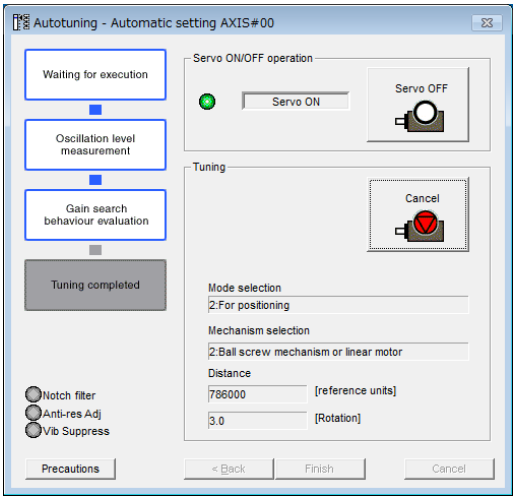

10. When tuning has been completed, click the **Finish** Button.
The results of tuning will be set in the parameters and you will return to the Tuning Dialog Box.

This concludes the procedure to perform autotuning without a host reference.

8.6.5 Troubleshooting Problems in Autotuning without a Host Reference

The following tables give the causes of and corrections for problems that may occur in autotuning without a host reference.

◆ Autotuning without a Host Reference Was Not Performed

Possible Cause	Corrective Action
Main circuit power supply is OFF.	Turn ON the main circuit power supply.
An alarm or warning occurred.	Remove the cause of the alarm or warning.
Overtraveling occurred.	Remove the cause of overtraveling.
The second gains were selected with the gain selection.	Disable automatic gain switching.
The HWBB was activated.	Release the HWBB.
The setting of the travel distance is too small.	Set the travel distance again in step 6 of the procedure.
The settings for the tuning-less function are not correct.	• Disable the tuning-less function (Pn170 = n.□□□0). • Enable the tuning-less function (Pn170 = n.□□□1) and specify moment of inertia estimation.

◆ When an Error Occurs during Execution of Autotuning without a Host Reference

Error	Possible Cause	Corrective Action
The gain adjustments were not successfully completed.	Machine vibration occurs or the positioning completion signal is not stable when the Servomotor stops.	• Increase the setting of the positioning completed width (Pn522). • Change the mode from 2 to 3. • If machine vibration occurs, suppress the vibration with the anti-resonance control adjustment and the vibration suppression function.
An error occurred during calculation of the moment of inertia.	Refer to the following section for troubleshooting information. ☞ ◆ *When an Error Occurs during Calculation of Moment of Inertia* on page 8-31	
Positioning was not completed within approximately 10 seconds after position adjustment was completed.	The positioning completed width is too narrow or proportional control is being used.	• Increase the setting of the positioning completed width (Pn522). • Set V_PPI to 0 in the servo command output signals (SVCMD_IO).

◆ When an Error Occurs during Calculation of Moment of Inertia

Possible Cause	Corrective Action
The SERVOPACK started calculating the moment of inertia but the calculation was not completed.	• Increase the setting of the speed loop gain (Pn100). • Increase the stroke (travel distance).
The moment of inertia fluctuated greatly and did not converge within 10 tries.	Set Pn103 (Moment of Inertia Ratio) from the machine specifications and specify not estimating the moment of inertia.
Low-frequency vibration was detected.	Double the setting of moment of inertia calculation starting level (Pn324).
The torque limit was reached.	• If you are using the torque limit, increase the torque limit. • Double the setting of moment of inertia calculation starting level (Pn324).
The speed control section changed to proportional control during calculation of the moment of inertia, e.g., V_PPI in the servo command output signals (SVCMD_IO) was set to 1.	Use PI control when calculating the moment of inertia.

◆ Adjustment Results Are Not Satisfactory for Position Control

You may be able to improve the adjustment results by changing the settings of the positioning completed width (Pn522) and the electronic gear (Pn20E/Pn210).

If satisfactory results are still not possible, adjust the overshoot detection level (Pn561). That may improve the adjustment results.

- Pn561 = 100% (default setting)
  This will allow tuning with overshooting that is equivalent to the positioning completed width.
- Pn561 = 0%
  This will allow tuning to be performed without overshooting within the positioning completed width, but the positioning completed width may be extended.

Pn561	Overshoot Detection Level			Speed Position Torque	
	Setting Range	Setting Unit	Default Setting	When Enabled	Classification
	0 to 100	1%	100	Immediately	Setup

8.6.6 Automatically Adjusted Function Settings

You can specify whether to automatically adjust the following functions during autotuning.

◆ Automatic Notch Filters

Normally, set Pn460 to n.□1□□ (Adjust automatically) (default setting).

Vibration will be detected during autotuning without a host reference and a notch filter will be adjusted.

Set Pn460 to n.□0□□ (Do not adjust automatically) only if you do not change the setting of the notch filter before you execute this function.

Parameter		Function	When Enabled	Classification
Pn460	n.□□□0	Do not adjust the first stage notch filter automatically during execution of autotuning without a host reference, autotuning with a host reference, and custom tuning.	Immediately	Tuning
	n.□□□1 (default setting)	Adjust the first stage notch filter automatically during execution of autotuning without a host reference, autotuning with a host reference, and custom tuning.		
	n.□0□□	Do not adjust the second stage notch filter automatically when the tuning-less function is enabled or during execution of autotuning without a host reference, autotuning with a host reference, and custom tuning.		
	n.□1□□ (default setting)	Adjust the second stage notch filter automatically when the tuning-less function is enabled or during execution of autotuning without a host reference, autotuning with a host reference, and custom tuning.		

◆ Anti-Resonance Control Adjustment

This function reduces low vibration frequencies, for which the notch filters cannot be used.

Normally, set Pn160 to n.□□1□ (Adjust automatically) (default setting).
Vibration will be detected during autotuning without a host reference and anti-resonance control will be automatically adjusted.

Parameter		Function	When Enabled	Classification
Pn160	n.□□0□	Do not adjust anti-resonance control automatically during execution of autotuning without a host reference, autotuning with a host reference, and custom tuning.	Immediately	Tuning
	n.□□1□ (default setting)	Adjust anti-resonance control automatically during execution of autotuning without a host reference, autotuning with a host reference, and custom tuning.		

◆ Vibration Suppression

You can use vibration suppression to suppress transitional vibration at a low frequency from 1 Hz to 100 Hz, which is generated mainly when the machine vibrates during positioning.

Normally, set Pn140 to n.□1□□ (Adjust automatically) (default setting).
Vibration will be detected during autotuning without a host reference and vibration suppression control will be automatically set.
Set Pn140 = n.□0□□ (Do not adjust automatically) only if you do not change the settings for vibration suppression before you execute autotuning without a host reference.

Note: Autotuning without a host reference uses model following control. Therefore, it can be executed only if the mode is set to 2 or 3.

Parameter		Function	When Enabled	Classification
Pn140	n.□0□□	Do not adjust vibration suppression automatically during execution of autotuning without a host reference, autotuning with a host reference, and custom tuning.	Immediately	Tuning
	n.□1□□ (default setting)	Adjust vibration suppression automatically during execution of autotuning without a host reference, autotuning with a host reference, and custom tuning.		

◆ Friction Compensation

Friction compensation compensates for changes in the following conditions.

- Changes in the viscous resistance of the lubricant, such as grease, on the sliding parts of the machine
- Changes in the friction resistance resulting from variations in the machine assembly
- Changes in the friction resistance due to aging

The conditions for applying friction compensation depend on the mode selection.

Mode Selection Settings	Friction Compensation
1: Standard	Based on the setting of Pn408 = n.X□□□ (Friction Compensation Function Selection)*
2: For position control	Adjusted with friction compensation.
3: For position control (emphasis on overshooting)	

Parameter		Function	When Enabled	Classification
Pn408	n.0□□□ (default setting)	Disable friction compensation.	Immediately	Setup
	n.1□□□	Enable friction compensation.		

* Refer to the following section for details.

☞ *Required Parameter Settings* on page 8-70

◆ Feedforward

If Pn140 is set to n.0□□□ (Do not use model following control and speed/torque feedforward together (default setting)) and tuning is performed with the mode selection set to 2 or 3, feedforward (Pn109), the speed feedforward input (VFF), and the torque feedforward input (TFF) will be disabled.

To use the speed feedforward input (VFF), the torque feedforward input (TFF), and model following control from the host controller in the system, set Pn140 to n.1□□□ (Use model following control and speed/torque feedforward together).

Parameter		Function	When Enabled	Classification
Pn140	n.0□□□ (default setting)	Do not use model following control and speed/torque feedforward together.	Immediately	Tuning
	n.1□□□	Use model following control and speed/torque feedforward together.		

Refer to the following manual for information on the torque feedforward input (TFF) and the speed feedforward input (VFF).

📖 Σ-7-Series MECHATROLINK-III Communications Standard Servo Profile Command Manual (Manual No.: SIEP S800001 31)

Important

When model following control is used with the feedforward function, it is used to make optimum feedforward settings in the SERVOPACK. Therefore, model following control is not normally used together with either the speed feedforward input (VFF) or torque feedforward input (TFF) from the host controller. However, model following control can be used with the speed feedforward input (VFF) or torque feedforward input (TFF) if required. An unsuitable feedforward input may result in overshooting.

8.6.7 Related Parameters

The following parameters are automatically adjusted or used as reference when you execute autotuning without a host reference.

Do not change the settings while autotuning without a host reference is being executed.

Parameter	Name	Automatic Changes
Pn100	Speed Loop Gain	Yes
Pn101	Speed Loop Integral Time Constant	Yes
Pn102	Position Loop Gain	Yes
Pn103	Moment of Inertia Ratio	Yes
Pn121	Friction Compensation Gain	Yes
Pn123	Friction Compensation Coefficient	Yes
Pn124	Friction Compensation Frequency Correction	No
Pn125	Friction Compensation Gain Correction	Yes
Pn401	First Stage First Torque Reference Filter Time Constant	Yes
Pn408	Torque-Related Function Selections	Yes
Pn409	First Stage Notch Filter Frequency	Yes
Pn40A	First Stage Notch Filter Q Value	Yes
Pn40C	Second Stage Notch Filter Frequency	Yes
Pn40D	Second Stage Notch Filter Q Value	Yes
Pn140	Model Following Control-Related Selections	Yes
Pn141	Model Following Control Gain	Yes
Pn142	Model Following Control Gain Correction	Yes
Pn143	Model Following Control Bias in the Forward Direction	Yes
Pn144	Model Following Control Bias in the Reverse Direction	Yes
Pn145	Vibration Suppression 1 Frequency A	Yes
Pn146	Vibration Suppression 1 Frequency B	Yes
Pn147	Model Following Control Speed Feedforward Compensation	Yes
Pn160	Anti-Resonance Control-Related Selections	Yes
Pn161	Anti-Resonance Frequency	Yes
Pn163	Anti-Resonance Damping Gain	Yes
Pn531	Program Jogging Travel Distance	No
Pn533	Program Jogging Movement Speed for Rotary Servomotor	No
Pn585	Program Jogging Movement Speed for Linear Servomotor	No
Pn534	Program Jogging Acceleration/Deceleration Time	No
Pn535	Program Jogging Waiting Time	No
Pn536	Program Jogging Number of Movements	No

Yes: The parameter is automatically set.

No: The parameter is not automatically set, but the setting is read during execution.

8.7 Autotuning with a Host Reference

This section describes autotuning with a host reference.

> **Important**
> Autotuning with a host reference makes adjustments based on the set speed loop gain (Pn100). Therefore, precise adjustments cannot be made if there is vibration when adjustments are started. Make adjustments after lowering the speed loop gain (Pn100) until vibration is eliminated.

8.7.1 Outline

Autotuning with a host reference automatically makes optimum adjustments for operation references from the host controller.

The following items are adjusted automatically.

- Gains (e.g., speed loop gain and position loop gain)
- Filters (torque reference filter and notch filters)
- Friction compensation
- Anti-resonance control
- Vibration suppression

Refer to the following section for details on the parameters that are adjusted.

☞ *8.7.7 Related Parameters* on page 8-41

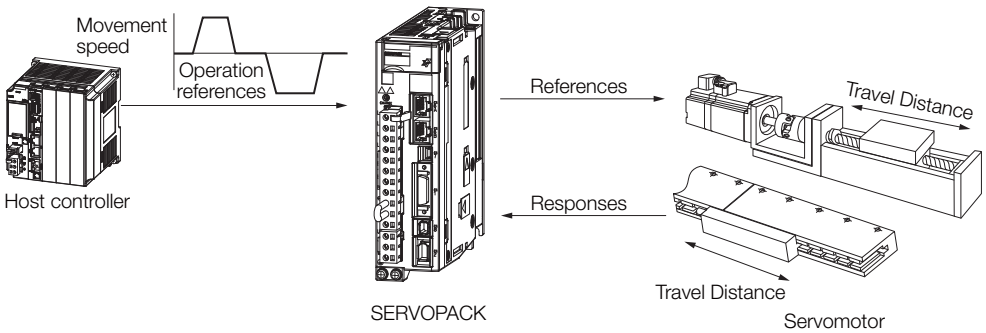

⚠ CAUTION

- Because autotuning with a host reference adjusts the SERVOPACK during automatic operation, vibration or overshooting may occur. To ensure safety, make sure that you can perform an emergency stop at any time.

8.7.2 Restrictions

Systems for Which Adjustments Cannot Be Made Accurately

Adjustments will not be made correctly for autotuning with a host reference in the following cases. Use custom tuning.

- When the travel distance for the reference from the host controller is equal to or lower than the setting of the positioning completed width (Pn522)
- Rotary Servomotors: When the movement speed for the reference from the host controller is equal to or lower than the setting of the rotation detection level (Pn502)
- Linear Servomotors: When the movement speed for the reference from the host controller is equal to or lower than the setting of the zero speed level (Pn581)
- When the time required to stop is 10 ms or less
- When the rigidity of the machine is low and vibration occurs when positioning is performed
- When the position integration function is used
- When proportional control is used
- When mode switching is used
- When the positioning completed width (Pn522) is too narrow

Refer to the following sections for details on custom tuning.

☞ *8.8 Custom Tuning* on page 8-42

Preparations

Always check the following before you execute autotuning with a host reference.

- The servo must be in ready status.
- There must be no overtravel.
- The servo must be OFF.
- Position control must be selected if power is supplied to the motor (i.e., when the servo is ON).
- The gain selection switch must be set to manual gain selection (Pn139 = n.□□□0).
- The first gains must be selected.
- The test without a motor function must be disabled (Pn00C = n.□□□0).
- There must be no warnings.
- The tuning-less function must be disabled (Pn170 = n.□□□0).
- The parameters must not be write prohibited.

8.7.3 Applicable Tools

The following table lists the tools that you can use to perform autotuning with a host reference and the applicable tool functions.

Tool	Function	Operating Procedure Reference
Digital Operator	Fn202	📖 Σ-7-Series Digital Operator Operating Manual (Manual No.: SIEP S800001 33)
SigmaWin+	***Tuning - Tuning***	☞ *8.7.4 Operating Procedure* on page 8-37

8.7.4 Operating Procedure

Use the following procedure to perform autotuning with a host reference.

⚠ CAUTION

- If you are using an MP3000-Series Controller for phase control, set the mode selection to 1. If 2 or 3 is selected for the mode, correct phase control may not be possible.

1. Confirm that the moment of inertia ratio (Pn103) is set correctly.

2. Click the Servo Drive Button in the workspace of the Main Window of the SigmaWin+.

3. Select **Tuning** in the Menu Dialog Box.
   The Tuning Dialog Box will be displayed.
   Click the **Cancel** Button to cancel tuning.

4. Click the **Execute** Button.

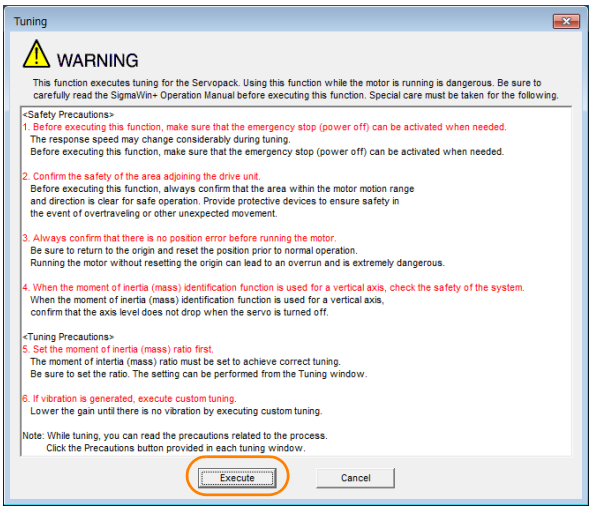

5. Select the **Position reference input** Option in the **Autotuning** Area and then click the **Autotuning** Button.

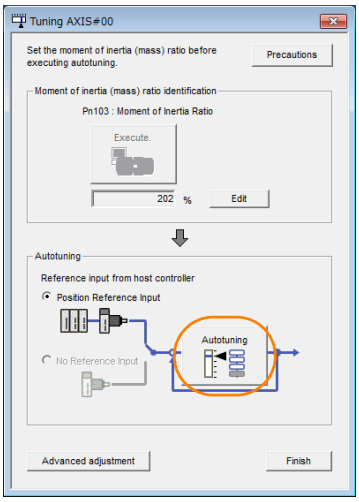

Information When the following dialog box is displayed, click the **OK** Button and then confirm that the correct moment of inertia ratio is set in Pn103 (Moment of Inertia Ratio).

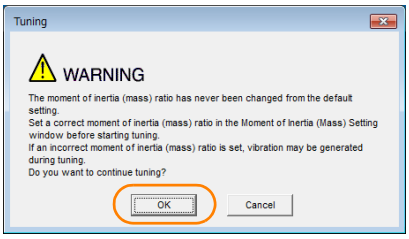

6. Set the conditions in the **Mode selection** Box and the **Mechanism selection** Box, and then click the **Next** Button.
If you select the **Start tuning using the default settings** Check Box in the **Tuning parameters** Area, the tuning parameters will be returned to the default settings before tuning is started.

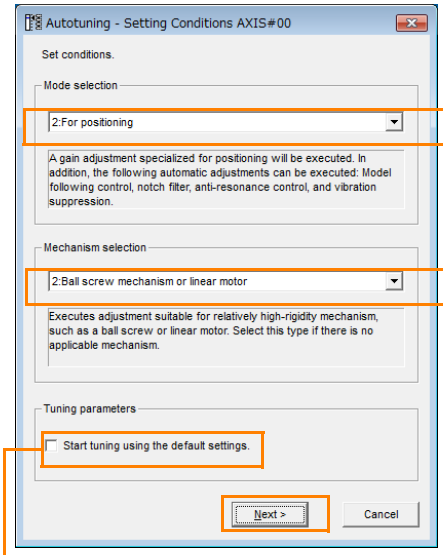

- **Mode selection** Box
  Set the mode.

Mode Selection	Description
1: Standard	Standard gain adjustment is performed. In addition to gain adjustment, notch filters and anti-resonance control are automatically adjusted.
2: For positioning	Tuning is performed for positioning applications. In addition to gain adjustment, model following control, notch filters, anti-resonance control, and vibration suppression are automatically adjusted.
3: For positioning especially to prevent overshooting	Tuning is performed for positioning applications with emphasis on eliminating overshooting. In addition to gain adjustment, notch filters, anti-resonance control, and vibration suppression are automatically adjusted.

- **Tuning parameters** Box
  Specify the parameters to use for tuning.
  If you select the **Start tuning using the default settings** Check Box, the tuning parameters will be returned to the default settings before tuning is started.

- **Mechanism selection** Box
  Select the type according to the machine element to drive.
  If there is noise or if the gain does not increase, better results may be obtained by changing the rigidity type.
  Select the type according to the following guidelines.

Mechanism Selection	Description
1: Belt mechanism	Tuning is performed for a mechanism with relatively low rigidity, e.g., a belt.
2: Ball screw mechanism or linear motor	Tuning is performed for a mechanism with relatively high rigidity, e.g., a ball screw or Linear Servomotor. Use this setting if there is no other appropriate setting.
3: Rigid model	Tuning is performed for a mechanism with high rigidity, e.g., a rigid body system.

7. Click the **Yes** Button.

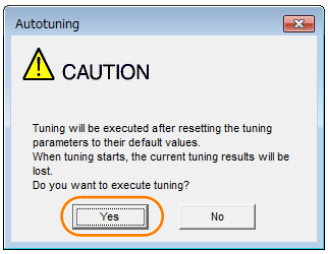

8. Input the correct moment of inertia ratio and click the **Next** Button.

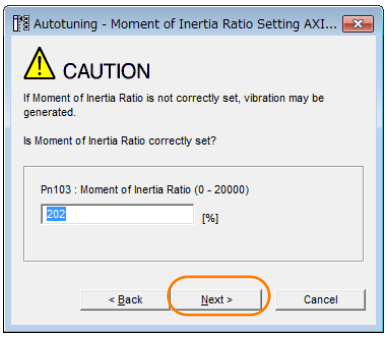

9. First confirm safety around moving parts. Turn ON the servo, enter a reference from the host controller, and then click the **Start tuning** Button.

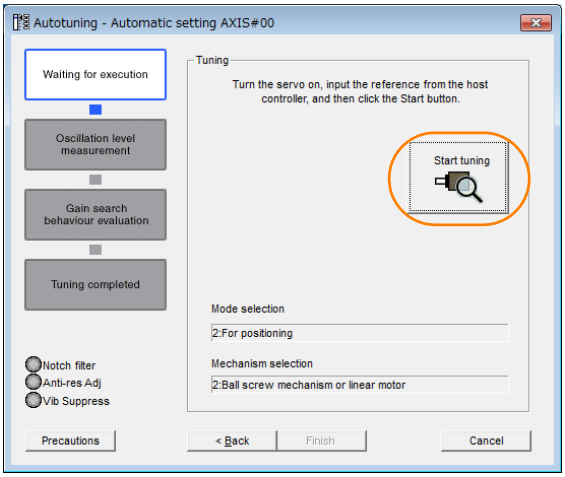

10. Click the **Yes** Button.

Tuning will be executed.
Vibration that occurs during tuning will be detected automatically and suitable settings will be made for that vibration. When the settings have been completed, the indicators for the functions that were used will light at the lower left of the dialog box.

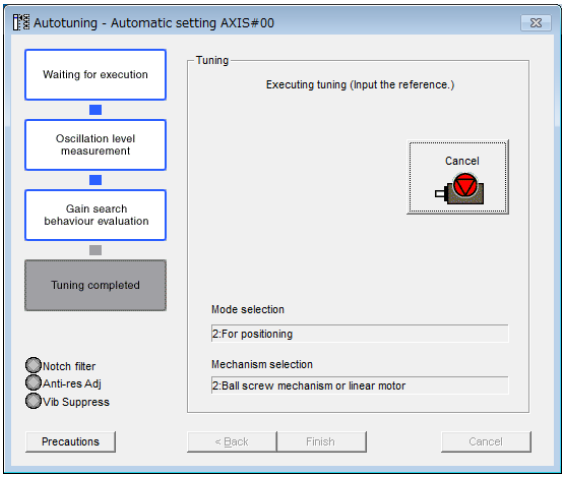

11. When tuning has been completed, click the **Finish** Button.
The results of tuning will be set in the parameters and you will return to the Tuning Dialog Box.

This concludes the procedure to perform autotuning with a host reference.

8.7.5 Troubleshooting Problems in Autotuning with a Host Reference

The following tables give the causes of and corrections for problems that may occur in autotuning with a host reference.

◆ Autotuning with a Host Reference Was Not Performed

Possible Cause	Corrective Action
Main circuit power supply is OFF.	Turn ON the main circuit power supply.
An alarm or warning occurred.	Remove the cause of the alarm or warning.
Overtraveling occurred.	Remove the cause of overtraveling.
The second gains were selected with the gain selection.	Disable automatic gain switching.
The HWBB was activated.	Release the HWBB.

◆ Troubleshooting Errors

Error	Possible Cause	Corrective Action
The gain adjustments were not successfully completed.	Machine vibration occurs or positioning completion is not stable when the Servomotor stops.	• Increase the setting of the positioning completed width (Pn522). • Change the mode from 2 to 3. • If machine vibration occurs, suppress the vibration with the anti-resonance control adjustment and the vibration suppression function.
Positioning was not completed within approximately 10 seconds after position adjustment was completed.	The positioning completed width is too narrow or proportional control is being used.	• Increase the setting of the positioning completed width (Pn522). • Set V_PPI to 0 in the servo command output signals (SVCMD_IO).

◆ Adjustment Results Are Not Satisfactory for Position Control

You may be able to improve the adjustment results by changing the settings of the positioning completed width (Pn522) and the electronic gear ratio (Pn20E/Pn210).

If satisfactory results are still not possible, adjust the overshoot detection level (Pn561). That may improve the adjustment results.

- Pn561 = 100% (default setting)
  This will allow tuning with overshooting that is equivalent to the positioning completed width.
- Pn561 = 0%
  This will allow tuning to be performed without overshooting within the positioning completed width, but the positioning completed width may be extended.

Pn561	Overshoot Detection Level			Speed Position Torque	
	Setting Range	Setting Unit	Default Setting	When Enabled	Classification
	0 to 100	1%	100	Immediately	Setup

8.7.6 Automatically Adjusted Function Settings

These function settings are the same as for autotuning without a host reference. Refer to the following section.

☞ *8.6.6 Automatically Adjusted Function Settings* on page 8-32

8.7.7 Related Parameters

The following parameters are automatically adjusted or used as reference when you execute autotuning with a host reference.

Do not change the settings while autotuning with a host reference is being executed.

Parameter	Name	Automatic Changes
Pn100	Speed Loop Gain	Yes
Pn101	Speed Loop Integral Time Constant	Yes
Pn102	Position Loop Gain	Yes
Pn103	Moment of Inertia Ratio	No
Pn121	Friction Compensation Gain	Yes
Pn123	Friction Compensation Coefficient	Yes
Pn124	Friction Compensation Frequency Correction	No
Pn125	Friction Compensation Gain Correction	Yes
Pn401	First Stage First Torque Reference Filter Time Constant	Yes
Pn408	Torque-Related Function Selections	Yes
Pn409	First Stage Notch Filter Frequency	Yes
Pn40A	First Stage Notch Filter Q Value	Yes
Pn40C	Second Stage Notch Filter Frequency	Yes
Pn40D	Second Stage Notch Filter Q Value	Yes
Pn140	Model Following Control-Related Selections	Yes
Pn141	Model Following Control Gain	Yes
Pn142	Model Following Control Gain Correction	Yes
Pn143	Model Following Control Bias in the Forward Direction	Yes
Pn144	Model Following Control Bias in the Reverse Direction	Yes
Pn145	Vibration Suppression 1 Frequency A	Yes
Pn146	Vibration Suppression 1 Frequency B	Yes
Pn147	Model Following Control Speed Feedforward Compensation	Yes
Pn160	Anti-Resonance Control-Related Selections	Yes
Pn161	Anti-Resonance Frequency	Yes
Pn163	Anti-Resonance Damping Gain	Yes

Yes: The parameter is automatically set.
No: The parameter is not automatically set, but the setting is read during execution.

8.8 Custom Tuning

This section describes custom tuning.

8.8.1 Outline

You can use custom tuning to manually adjust the servo during operation using a speed or position reference input from the host controller. You can use it to fine-tune adjustments that were made with autotuning.

The following items are adjusted automatically.

- Gains (e.g., speed loop gain and position loop gain)
- Filters (torque reference filter and notch filters)
- Friction compensation
- Anti-resonance control

Refer to the following section for details on the parameters that are adjusted.

☞ *8.8.7 Related Parameters* on page 8-50

There are two adjustment methods that you can use for custom tuning.

■ Tuning Mode 0 (Setting Servo Gains Giving Priority to Stability) or 1 (Setting Servo Gains Giving Priority to Good Response)

These modes allow you to set stable control conditions for multiple servo gains by manipulating only one tuning level. Automatic setting of notch filters and anti-resonance control is provided if vibration is detected. Manual anti-resonance control adjustment is also possible during custom tuning.

■ Tuning Mode 2 (Setting Servo Gains Giving Priority to Position Control Applications) or 3 (Setting Servo Gains Giving Priority to Preventing Overshooting in Position Control Applications)

Two tuning levels are manipulated to reduce positioning time even further and set multiple servo gains.
Model following control is used to reduce the positioning time. If vibration is detected, notch filters and anti-resonance control are automatically adjusted, and friction compensation is automatically set. Manual anti-resonance control adjustment and vibration suppression are also possible during custom tuning.

⚠ CAUTION

- Vibration or overshooting may occur during custom tuning. To ensure safety, make sure that you can perform an emergency stop at any time.

8.8.2 Preparations

Always check the following before you execute custom tuning.

- The test without a motor function must be disabled (Pn00C = n.□□□0).
- The tuning-less function must be disabled (Pn170 = n.□□□0).
- If speed control is used, tuning mode 0 or 1 must be set.
- The parameters must not be write prohibited.

8.8.3 Applicable Tools

The following table lists the tools that you can use to perform custom tuning and the applicable tool functions.

Tool	Function	Operating Procedure Reference
Digital Operator	Fn203	Σ-7-Series Digital Operator Operating Manual (Manual No.: SIEP S800001 33)
SigmaWin+	***Tuning* – *Tuning***	*8.8.4 Operating Procedure* on page 8-43

8.8.4 Operating Procedure

Use the following procedure to perform custom tuning.

WARNING

- Before you execute custom tuning, check the information provided in the SigmaWin+ operating manual.
  Observe the following precautions.
  - Make sure that you can perform an emergency stop at any time.
    When custom tuning is started, several parameters will be overwritten with the recommended settings, which may greatly affect the response before and after execution. Make sure that you can perform an emergency stop at any time.
  - Set the moment of inertia correctly before you execute custom tuning.
    If the setting greatly differs from the actual moment of inertia, vibration may occur.
  - If you change the feedforward level, the new setting will not be used immediately. It will be used after positioning is completed.

CAUTION

- If you are using an MP3000-series Controller for phase control, set the tuning mode to 0 or 1. If 2 or 3 is selected for the tuning mode, correct phase control may not be possible.

1. Confirm that the moment of inertia ratio (Pn103) is set correctly.

2. Click the Servo Drive Button in the workspace of the Main Window of the SigmaWin+.

3. Select **Tuning** in the Menu Dialog Box.
   The Tuning Dialog Box will be displayed.
   Click the **Cancel** Button to cancel tuning.

4. Click the **Execute** Button.

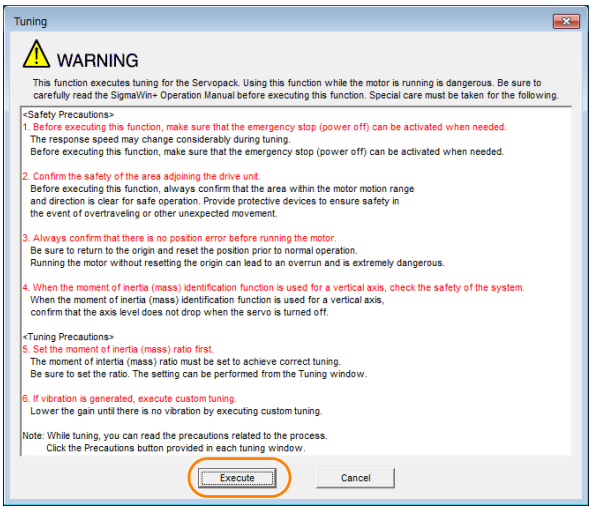

5. Click the **Advanced adjustment** Button.

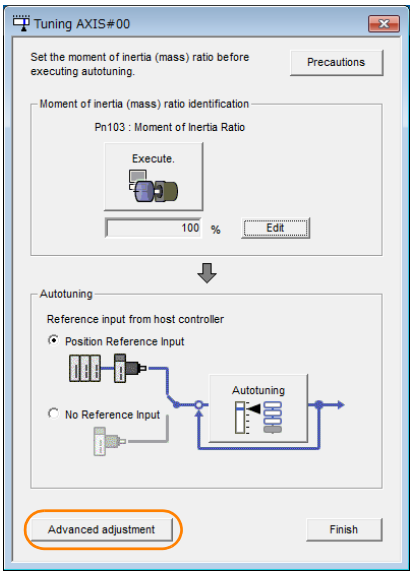

Information

When the following dialog box is displayed, click the **OK** Button and then confirm that the correct moment of inertia ratio is set in Pn103 (Moment of Inertia Ratio).

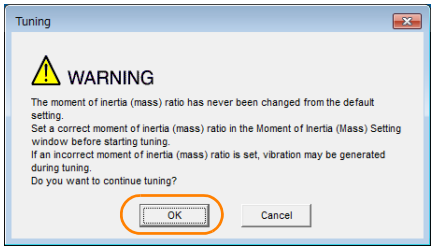

6. Click the **Custom tuning** Button.

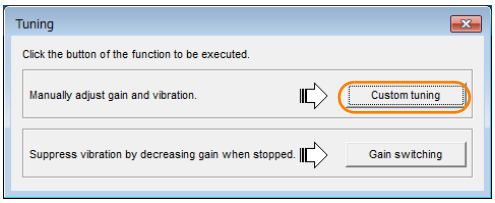

7. Set the **Tuning mode** Box and **Mechanism selection** Box, and then click the **Next** Button.

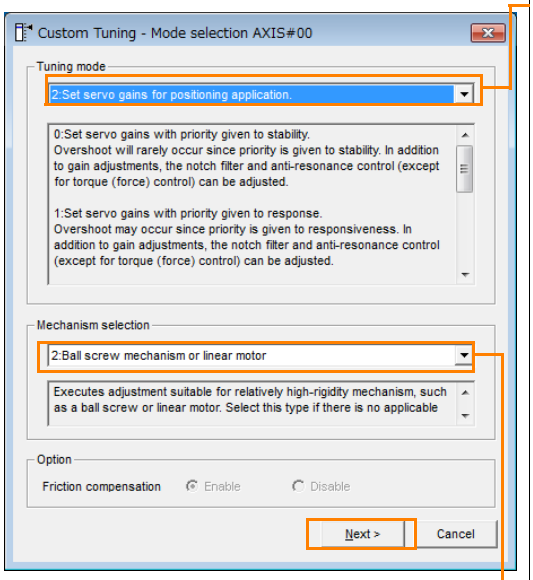

Tuning mode Box

Mode Selection	Description
0: Set servo gains with priority given to stability.	This setting gives priority to stability and preventing overshooting. In addition to gain adjustment, notch filters and anti-resonance control (except during torque control) are automatically adjusted.
1: Set servo gains with priority given to response.	Overshooting may occur because priority is given to response. In addition to gain adjustment, notch filters and anti-resonance control (except during torque control) are automatically adjusted.
2: Set servo gains for positioning application.	Tuning is performed for positioning applications. In addition to gain adjustment, notch filters, anti-resonance control, and vibration suppression are adjusted.
3: Set servo gains especially to prevent overshooting during positioning application.	Tuning is performed for positioning applications with emphasis on eliminating overshooting. In addition to gain adjustment, notch filters, anti-resonance control, and vibration suppression are adjusted.

- **Mechanism Selection** Box
  Select the type according to the machine element to drive.
  If there is noise or if the gain does not increase, better results may be obtained by changing the rigidity type. Select the type according to the following guidelines.

Mechanism Selection	Description
1: Belt mechanism	Tuning is performed for a mechanism with relatively low rigidity, e.g., a belt.
2: Ball screw mechanism or Linear motor	Tuning is performed for a mechanism with relatively high rigidity, e.g., a ball screw or Linear Servomotor. Use this setting if there is no other appropriate setting.
3: Rigid body system	Tuning is performed for a mechanism with high rigidity, e.g., a rigid body system.

Information The tuning modes that you can select depend on the SERVOPACK setting.

8. If the moment of inertia ratio is not set correctly, correct the setting and then click the **Next** Button.

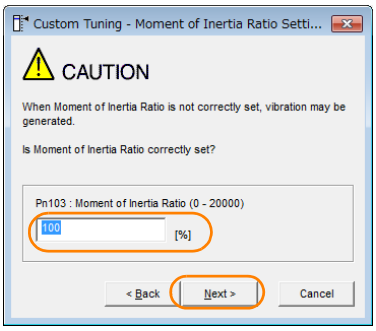

9. Turn ON the servo, enter a reference from the host controller, and then click the **Start tuning** Button.

Tuning Mode 0 or 1

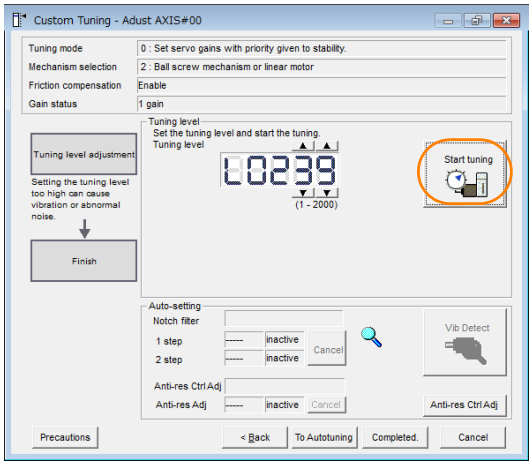

Tuning Mode 2 or 3

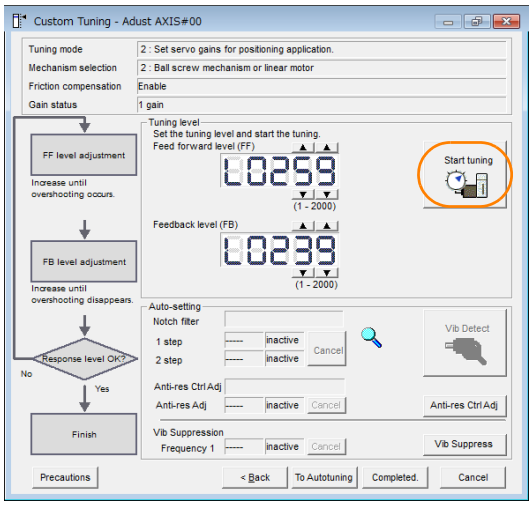

10. Use the ▲ and ▼ Buttons to change the tuning level.

Click the **Back** Button during tuning to restore the setting to its original value. The tuning level will return to the value from before when custom tuning was started.

Tuning Mode 0 or 1

Increase the tuning level until overshooting occurs.

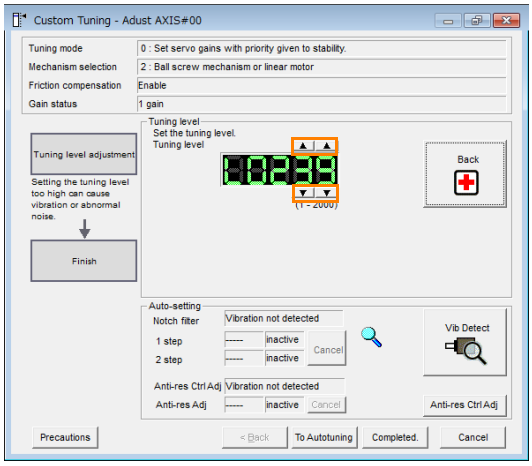

Tuning Mode 2 or 3

Increase the feedforward level until overshooting occurs and then increase the feedback level until overshooting is eliminated. Repeat these changes to make the adjustment.

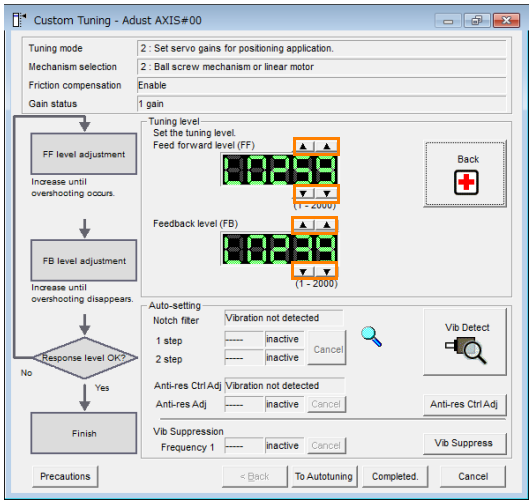

Information The new feedforward level will not be used until the positioning completed signal is output.

11. You can set the functions to suppress vibration (notch filters, automatic anti-resonance control setting, anti-resonance control adjustment, and autotuning with a host reference) as required.

Refer to the following section for details.

☞ *Vibration Suppression Functions* on page 8-47

12. When tuning has been completed, click the **Completed** Button.
The values that were changed will be saved in the SERVOPACK and you will return to the Tuning Dialog Box.

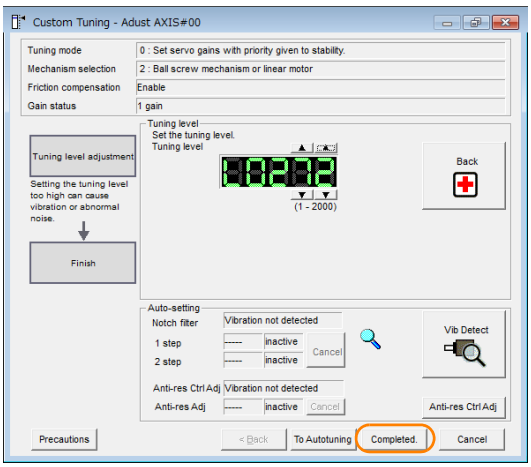

This concludes the procedure to set up custom tuning.

Vibration Suppression Functions

◆ Notch Filters and Automatic Anti-resonance Control Setting

If the vibration frequency that occurs when you increase the servo gains is at 1,000 Hz or higher, notch filters are effective to suppress vibration. If the vibration is between 100 Hz and 1,000 Hz, anti-resonance control is effective.

◆ Automatic Setting

To set vibration suppression automatically, use the parameters to enable notch filters and automatic anti-resonance control setting.
The notch filter frequency (stage 1 or 2) or anti-resonance control frequency that is effective for the vibration that was detected during tuning will be automatically set.

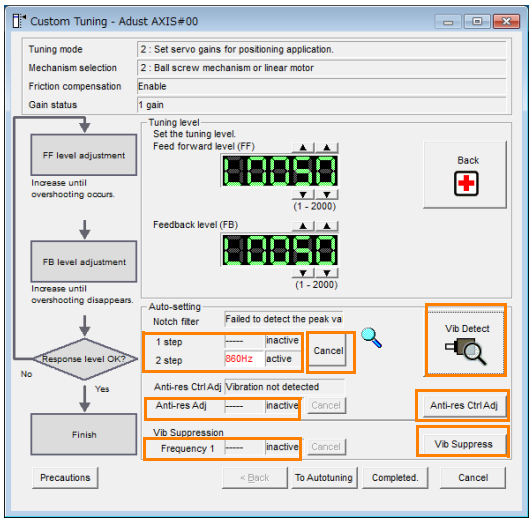

- **Auto-setting Cancel** Buttons
  The automatically set notch filter frequencies or the anti-resonance control frequencies may not always suppress vibration. Click the **Cancel** Button to reset the notch filter frequencies or the anti-resonance control frequencies to the values from just before these frequencies were set automatically.
  When they are reset, vibration detection will start again.
- **Vib Detect** Button
  While the notch filter or automatic anti-resonance control setting function is enabled, you can click the **Vib Detect** Button to manually detect vibration. When you click the **Vib Detect** Button, the SERVOPACK will detect vibration at that time, and set the notch filter frequency (stage 1 or 2) or anti-resonance control frequency that is effective for the detected vibration. You can also perform manual vibration detection even when the SERVOPACK does not detect vibration.
- **Anti-res Ctrl Adj** Button
  You can use the **Anti-res Ctrl Adj** Button to execute the anti-resonance control adjustment if fine-tuning is required. Refer to the following section.
  ☞ *8.9 Anti-Resonance Control Adjustment* on page 8-51
- **Vib Suppress** Button
  Click the **Vib Suppress** Button to suppress low and transient vibration (oscillation) of approximately 1 Hz to 100 Hz that occurs during positioning. Refer to the following section.
  ☞ *8.10 Vibration Suppression* on page 8-56

◆ Autotuning with a Host Reference

You can perform autotuning with a host reference. Refer to the following section for details.
☞ *8.7 Autotuning with a Host Reference* on page 8-35

8.8.5 Automatically Adjusted Function Settings

You cannot use vibration suppression functions at the same time. Other automatic function settings are the same as for autotuning without a host reference. Refer to the following section.
☞ *8.6.6 Automatically Adjusted Function Settings* on page 8-32

8.8.6 Tuning Example for Tuning Mode 2 or 3

Step	Measurement Display Examples	Operation
1	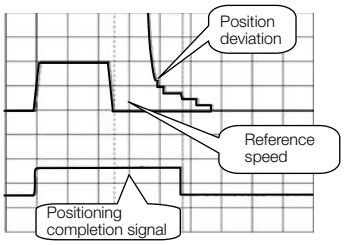	The positioning time is measured after the moment of inertia ratio (Pn103) is set correctly. Tuning is completed if the specifications are met. The tuning results are saved in the SERVOPACK.
2	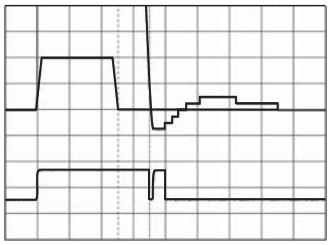	The positioning time will be reduced if the feedforward level is increased. Tuning is completed if the specifications are met. The tuning results are saved in the SERVOPACK. If overshooting occurs before the specifications are met, proceed to step 3.
3	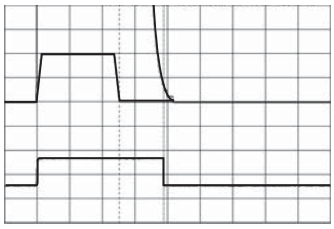	Overshooting will be reduced if the feedback level is increased. If the overshooting is eliminated, proceed to step 4.
4	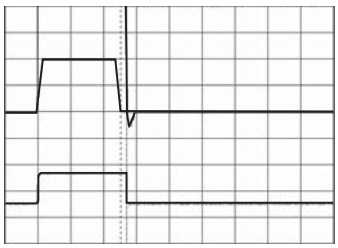	The graph shows overshooting that occurred when the feedforward level was increased even more after step 3. In this state, overshooting occurs, but the positioning settling time is shorter. Tuning is completed if the specifications are met. The tuning results are saved in the SERVOPACK. If overshooting occurs before the specifications are met, repeat steps 3 and 4. If vibration occurs before the overshooting is eliminated, the vibration is suppressed with the notch filters and anti-resonance control.
5	–	The tuning results are saved in the SERVOPACK.

8.8.7 Related Parameters

The following parameters are automatically adjusted or used as reference when you execute custom tuning.

Do not change the settings while custom tuning is being executed.

Parameter	Name	Automatic Changes
Pn100	Speed Loop Gain	Yes
Pn101	Speed Loop Integral Time Constant	Yes
Pn102	Position Loop Gain	Yes
Pn103	Moment of Inertia Ratio	No
Pn121	Friction Compensation Gain	Yes
Pn123	Friction Compensation Coefficient	Yes
Pn124	Friction Compensation Frequency Correction	No
Pn125	Friction Compensation Gain Correction	Yes
Pn401	First Stage First Torque Reference Filter Time Constant	Yes
Pn408	Torque-Related Function Selections	Yes
Pn409	First Stage Notch Filter Frequency	Yes
Pn40A	First Stage Notch Filter Q Value	Yes
Pn40C	Second Stage Notch Filter Frequency	Yes
Pn40D	Second Stage Notch Filter Q Value	Yes
Pn140	Model Following Control-Related Selections	Yes
Pn141	Model Following Control Gain	Yes
Pn142	Model Following Control Gain Correction	Yes
Pn143	Model Following Control Bias in the Forward Direction	Yes
Pn144	Model Following Control Bias in the Reverse Direction	Yes
Pn145	Vibration Suppression 1 Frequency A	No
Pn146	Vibration Suppression 1 Frequency B	No
Pn147	Model Following Control Speed Feedforward Compensation	Yes
Pn160	Anti-Resonance Control-Related Selections	Yes
Pn161	Anti-Resonance Frequency	Yes
Pn163	Anti-Resonance Damping Gain	Yes

Yes: The parameter is automatically set.

No: The parameter is not automatically set, but the setting is read during execution.

8.9 Anti-Resonance Control Adjustment

This section describes anti-resonance control.

8.9.1 Outline

Anti-resonance control increases the effectiveness of vibration suppression after custom tuning.

Anti-resonance control is effective for suppression of continuous vibration frequencies from 100 to 1,000 Hz that occur when the control gain is increased. Vibration can be eliminated by setting vibration frequencies through automatic detection or by manually setting them to adjust the damping gain. Input an operation reference and execute this anti-resonance control adjustment when there is vibration.

Anti-resonance control is automatically set by autotuning without a host reference or autotuning with a host reference. Use anti-resonance control adjustment only if fine-tuning is required or readjustment is required as a result of a failure to detect vibration.

Perform custom tuning if required to increase the response after performing anti-resonance control adjustment. If the control gain is increased, e.g., when custom tuning is performed, vibration may occur again. If that occurs, perform anti-resonance control adjustment again to fine-tune the parameters.

⚠ CAUTION

- Related parameters will be set automatically when anti-resonance control adjustment is executed. This may greatly affect the response before and after execution. Make sure that you can perform an emergency stop at any time.
- Before you execute anti-resonance control adjustment, set the correct moment of inertia ratio (Pn103). If the setting greatly differs from the actual moment of inertia ratio, normal control of the machine may not be possible, and vibration may occur.

Important

- Anti-resonance control adjustment detects vibration frequencies between 100 Hz and 1,000 Hz. If the vibration frequency is not within this range, use custom tuning with tuning mode 2 selected to automatically set a notch filter or use vibration suppression.
- Vibration reduction can be made more effective by increasing the anti-resonance damping gain (Pn163), but the vibration may become larger if the damping gain is too high. Increase the damping gain by approximately 0% to 200% in 10% increments while checking the effect on vibration. If vibration reduction is still insufficient at a gain of 200%, cancel the setting, and lower the control gain by using a different method, such as custom tuning.

8.9.2 Preparations

Always check the following before you execute anti-resonance control adjustment.

- The tuning-less function must be disabled (Pn170 = n.□□□0).
- The test without a motor function must be disabled (Pn00C = n.□□□0).
- The control method must not be set to torque control.
- The parameters must not be write prohibited.

8.9.3 Applicable Tools

The following table lists the tools that you can use to perform anti-resonance control adjustment and the applicable tool functions.

Tool	Function	Operating Procedure Reference
Digital Operator	Fn204	Σ-7-Series Digital Operator Operating Manual (Manual No.: SIEP S800001 33)
SigmaWin+	***Tuning - Tuning***	*8.9.4 Operating Procedure* on page 8-52

8.9.4 Operating Procedure

To execute anti-resonance control adjustment, an operation reference is input, and the adjustment is executed while vibration is occurring.

The following methods can be used to execute anti-resonance control adjustment.

- To automatically detect the vibration frequency
- To manually set the vibration frequency

Use the following procedure.

⚠ CAUTION

- Before you execute anti-resonance control adjustment, check the information provided in the SigmaWin+ operating manual.
  Observe the following precautions.
  - Make sure that you can perform an emergency stop at any time.
    Parameters will be set automatically when anti-resonance control adjustment is executed. This may greatly affect the response before and after execution. Make sure that you can perform an emergency stop (to turn OFF the power supply) at any time.
  - Set the moment of inertia correctly before you execute anti-resonance control adjustment.
    If the setting greatly differs from the actual moment of inertia, effective vibration reduction may not be possible.
  - If you have already performed anti-resonance control adjustment and then you change the frequency, the current anti-resonance control effect may be lost. Caution is particularly required when automatically detecting the vibration frequency.
  - If effective vibration reduction is not achieved even after you execute anti-resonance control adjustment, cancel the function and lower the control gain by using a different method, such as custom tuning.
  - Perform custom tuning separately if required to increase the response after performing anti-resonance control adjustment.
    If the servo gain is increased, e.g., when custom tuning is performed, vibration may occur again. If that occurs, perform anti-resonance control adjustment again to fine-tune the parameters.

1. Perform steps 1 to 8 of the procedure for custom tuning. Refer to the following section for details.
   8.8.4 Operating Procedure on page 8-43

2. Click the **Anti-res Ctrl Adj** Button.
The rest of the procedure depends on whether you know the vibration frequency.

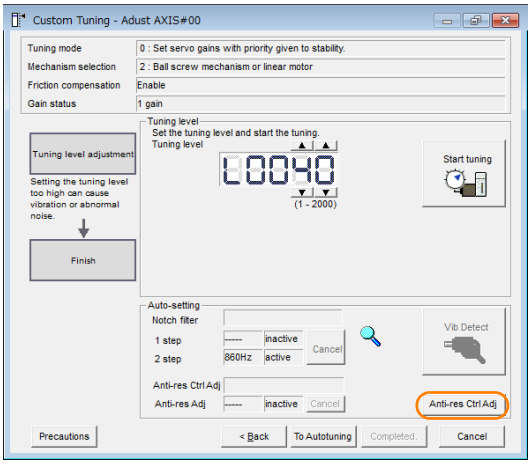

3. If you do not know the vibration frequency, click the **Auto Detect** Button. If you know the vibration frequency, click the **Manual Set** Button.

To Automatically Detect the Vibration Frequency

The frequency will be set.

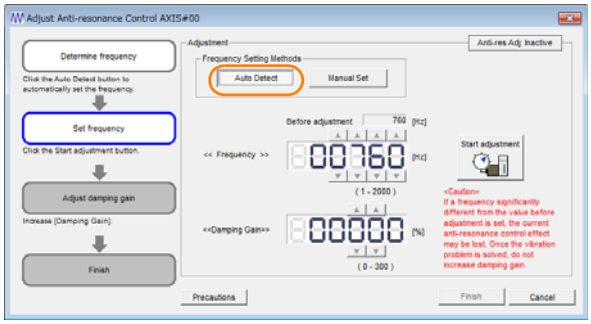

To Manually Set the Vibration Frequency

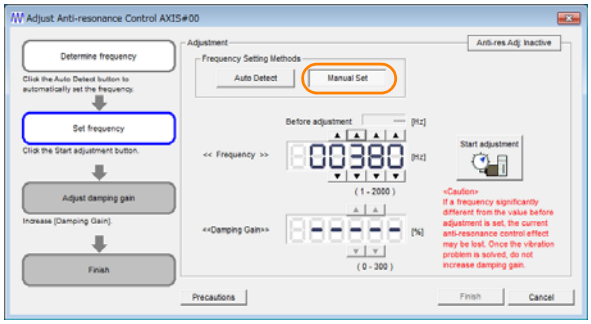

4. Click the **Start adjustment** Button.

5. Use the ▲ and ▼ Buttons in the **Adjustment** Area to change the settings.
Click the **Reset** Button during tuning to restore the setting to its original value. The tuning level will return to the value from before when custom tuning was started.

To Automatically Detect the Vibration Frequency

Change the setting of the damping gain.

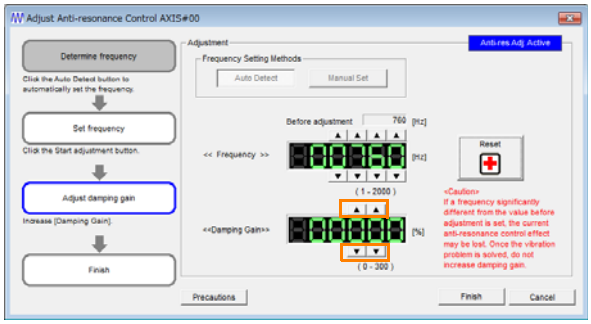

To Manually Set the Vibration Frequency

Change the settings of the frequency and damping gain.

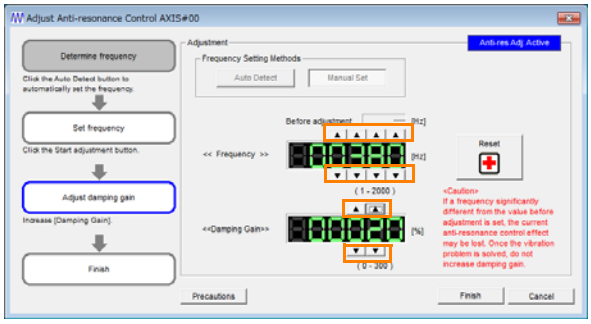

6. When the adjustment has been completed, click the **Finish** Button.
The values that were changed will be saved in the SERVOPACK and you will return to the Tuning Dialog Box.

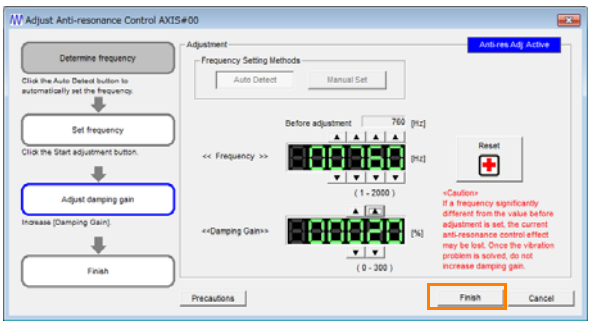

This concludes the procedure to set up anti-resonance control.

8.9.5 Related Parameters

The following parameters are automatically adjusted or used as reference when you execute anti-resonance control adjustment.

Do not change the settings while anti-resonance control adjustment is being executed.

Parameter	Name	Automatic Changes
Pn160	Anti-Resonance Control-Related Selections	Yes
Pn161	Anti-Resonance Frequency	Yes
Pn162	Anti-Resonance Gain Correction	No
Pn163	Anti-Resonance Damping Gain	Yes
Pn164	Anti-Resonance Filter Time Constant 1 Correction	No
Pn165	Anti-Resonance Filter Time Constant 2 Correction	No

Yes: The parameter is automatically set.

No: The parameter is not automatically set, but the setting is read during execution.

8.9.6 Suppressing Different Vibration Frequencies with Anti-resonance Control

When you use anti-resonance control and increase the control gain, for some mechanism, vibration can occur at a higher frequency than the frequency for which vibration was suppressed. If this occurs, you can suppress vibration for more than one frequency by adjusting Pn166 (Anti-Resonance Damping Gain 2).

Information

Guidelines for Vibration That Can Be Suppressed
Anti-resonance frequency (Pn161): fa [Hz], Another vibration frequency that occurs when the control gain is increased: fb [Hz]
- Vibration frequencies: 100 Hz to 1,000 Hz
- Range of different vibration frequencies: $1 < (fb/fa) \leq 3$ to 4

Required Parameter Settings

The following parameter settings are required to use anti-resonance control for more than one vibration frequency.

Parameter		Description	When Enabled	Classification
Pn160	n.□□□0 (default setting)	Do not use anti-resonance control.	After restart	Setup
	n.□□□1	Use anti-resonance control.		

Pn161	Anti-Resonance Frequency			Speed Position Torque	
	Setting Range	Setting Unit	Default Setting	When Enabled	Classification
	10 to 20,000	0.1 Hz	1000	Immediately	Tuning
Pn162	Anti-Resonance Gain Correction			Speed Position Torque	
	Setting Range	Setting Unit	Default Setting	When Enabled	Classification
	1 to 1,000	1%	100	Immediately	Tuning
Pn163	Anti-Resonance Damping Gain			Speed Position Torque	
	Setting Range	Setting Unit	Default Setting	When Enabled	Classification
	0 to 300	1%	0	Immediately	Tuning
Pn164	Anti-Resonance Filter Time Constant 1 Correction			Speed Position Torque	
	Setting Range	Setting Unit	Default Setting	When Enabled	Classification
	-1,000 to 1,000	0.01 ms	0	Immediately	Tuning
Pn165	Anti-Resonance Filter Time Constant 2 Correction			Speed Position Torque	
	Setting Range	Setting Unit	Default Setting	When Enabled	Classification
	-1,000 to 1,000	0.01 ms	0	Immediately	Tuning
Pn166	Anti-Resonance Damping Gain 2			Speed Position Torque	
	Setting Range	Setting Unit	Default Setting	When Enabled	Classification
	0 to 1,000	1%	0	Immediately	Tuning

Adjustment Procedure for Suppressing Different Vibration Frequencies with Anti-resonance Control

Use the following procedure to make adjustments to suppress different vibration frequencies with anti-resonance control.

Step	Operation
1	Use the gain adjustment and anti-resonance control. Refer to the following section for details. ☞ *8.9.4 Operating Procedure* on page 8-52
2	If there is vibration at a higher frequency than the vibration suppressed with anti-resonance control in step 1, adjust Pn166 (Anti-Resonance Damping Gain 2).
3	Adjust Pn166 (Anti-Resonance Damping Gain 2) while checking to see if vibration reduction is effective. To adjust Pn166 (Anti-Resonance Damping Gain 2), increase the setting by 10% at a time starting from the value that resulted in Pn163 (Anti-Resonance Damping Gain) from the adjustment in step 1.
4	If the vibration disappears, the adjustment is completed. However, if the vibration does not disappear even when you adjust Pn166 (Anti-Resonance Damping Gain 2), reduce the tuning level or feedback level until vibration does not occur.

8.10 Vibration Suppression

This section describes vibration suppression.

8.10.1 Outline

You can use vibration suppression to suppress transient vibration at a low frequency from 1 Hz to 100 Hz, which is generated mainly when the machine vibrates during positioning. This is effective for vibration frequencies for which notch filters and anti-resonance control adjustment are not effective.

Vibration suppression is automatically set by autotuning without a host reference or autotuning with a host reference. Use vibration suppression only if fine-tuning is required or readjustment is required as a result of a failure to detect vibration. To execute vibration suppression, input an operation reference and execute the function when there is vibration.

Perform custom tuning if required to increase the response after performing vibration suppression.

⚠ CAUTION

- Related parameters will be set automatically when vibration suppression is executed. This may greatly affect the response before and after execution. Make sure that you can perform an emergency stop at any time.
- Before you execute vibration suppression, set the correct moment of inertia ratio (Pn103) with autotuning without a host reference or another method. If the setting greatly differs from the actual moment of inertia ratio, normal control of the machine may not be possible, and vibration may occur.
- If you execute vibration suppression when you are using an MP3000-Series Controller for phase control, correct phase control may not be possible.

Important

- Vibration suppression detects vibration frequencies between 1 Hz and 100 Hz.
- Frequency detection will not be performed if there is no vibration in the position deviation or if the vibration frequency is outside the range of detectable frequencies. If that is a problem, use a device such as a displacement meter or vibration sensor to measure the vibration frequency.
- If an automatically detected vibration frequency is not suppressed, the actual frequency and the detected frequency may be different. Fine-tune the detected frequency if necessary.

Items That Influence Performance

If continuous vibration occurs while the Servomotor is stopping, vibration suppression cannot be used to suppress the vibration effectively. In this case, use anti-resonance control adjustment or custom tuning.

Detection of Vibration Frequencies

Frequency detection may not be possible if vibration does not appear in the position deviation or the vibration that results from the position deviation is too small. You can adjust the detection sensitivity by changing the setting of the residual vibration detection width (Pn560), which is set as a percentage of the positioning completed width (Pn522). Perform the detection of vibration frequencies again after adjusting the setting of Pn560.

Pn560	Residual Vibration Detection Width				Position
	Setting Range	Setting Unit	Default Setting	When Enabled	Classification
	1 to 3,000	0.1%	400	Immediately	Setup

Note: As a guideline, change the setting 10% at a time. If the setting of this parameter is lowered, the detection sensitivity will be increased. Vibration may not be detected accurately if the setting is too small.

Information The vibration frequencies that are automatically detected may vary somewhat with each positioning operation. Perform positioning several times and make adjustments while checking the effect of vibration suppression.

8.10.2 Preparations

Always check the following before you execute vibration suppression.

- Position control must be used.
- The tuning-less function must be disabled (Pn170 = n.□□□0).
- The test without a motor function must be disabled (Pn00C = n.□□□0).
- The parameters must not be write prohibited.

8.10.3 Applicable Tools

The following table lists the tools that you can use to perform vibration suppression and the applicable tool functions.

Tool	Function	Operating Procedure Reference
Digital Operator	Fn205	Σ-7-Series Digital Operator Operating Manual (Manual No.: SIEP S800001 33)
SigmaWin+	***Tuning - Tuning***	*8.10.4 Operating Procedure* on page 8-57

8.10.4 Operating Procedure

Use the following procedure to perform vibration suppression.

1. Perform steps 1 to 8 of the procedure for custom tuning. Refer to the following section for details.
   8.8.4 Operating Procedure on page 8-43

2. Click the **Vib Suppress** Button.

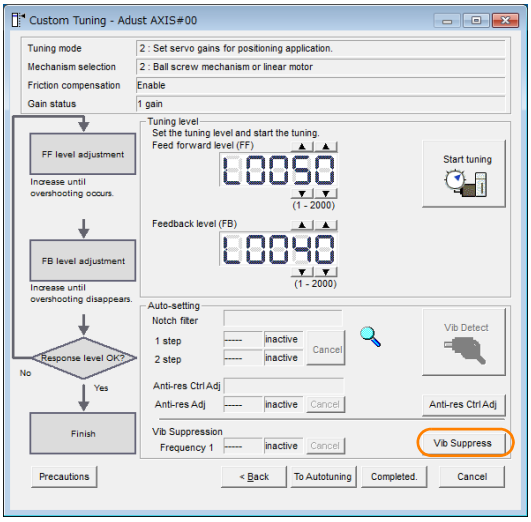

3. Click the **Import** Button or click ▲ and ▼ Button to manually adjust the set frequency.
   When you click the **Import** Button, the residual vibration frequency in the Servomotor is read as the set frequency. (The frequency can be read only when the residual vibration frequency is between 1.0 and 100.0.)

> **Important**
> Frequency detection will not be performed if there is no vibration or if the vibration frequency is outside the range of detectable frequencies. If a vibration frequency is not detected, provide a means of measuring the vibration frequency.

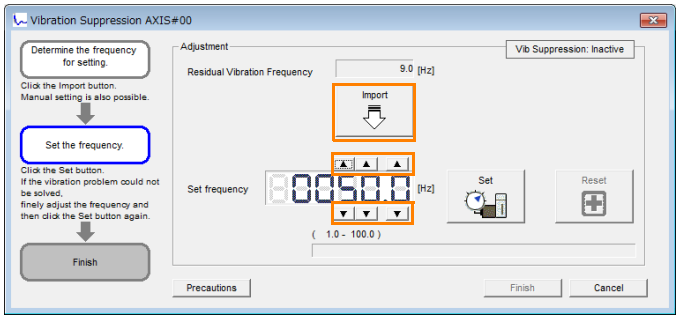

4. Click the **Set** Button.

> **Important**
> No settings related to vibration suppression are changed during operation.
> If the Servomotor does not stop within approximately 10 seconds after changing the setting, an update timeout will occur. The setting will be automatically returned to the previous value.

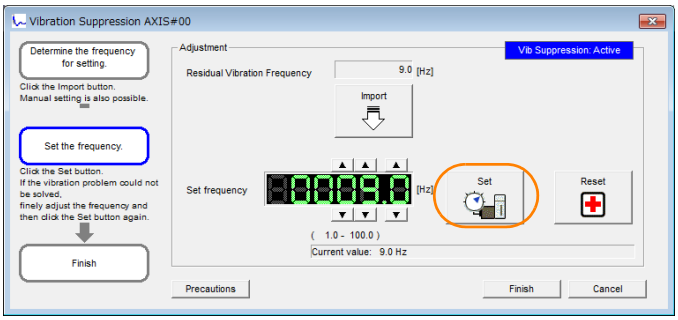

If the vibration is not eliminated, use the ▲ and ▼ Buttons for the set frequency to fine-tune the value and click the **Set** Button again.

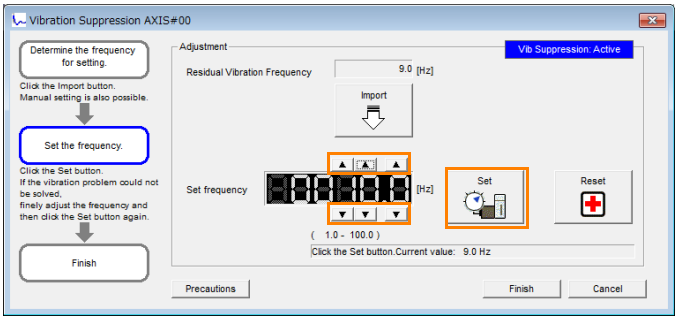

Click the **Reset** Button during adjustment to restore the setting to its original value. The status from before when adjustment was started will be restored.

5. When the vibration has been eliminated, click the **Finish** Button.
The updated value will be saved in the SERVOPACK.

> **Important**
> Vibration suppression will be enabled in step 5. The Servomotor response, however, will change when the Servomotor comes to a stop with no reference input.

This concludes the procedure to set up vibration suppression.

8.10.5 Setting Combined Functions

You can also use the feedforward function when you execute vibration suppression.

In the default settings, feedforward (Pn109), the speed feedforward input (VFF), and the torque feedforward input (TFF) are disabled.

To use the speed feedforward input (VFF), the torque feedforward input (TFF), and model following control from the host controller in the system, set Pn140 to n.1□□□ (Use model following control and speed/torque feedforward together).

Parameter		Function	When Enabled	Classification
Pn140	n.0□□□ (default setting)	Do not use model following control and speed/torque feedforward together.	Immediately	Tuning
	n.1□□□	Use model following control and speed/torque feedforward together.		

Refer to the following manual for information on the torque feedforward input (TFF) and the speed feedforward input (VFF).

Σ-7-Series MECHATROLINK-III Communications Standard Servo Profile Command Manual (Manual No.: SIEP S800001 31)

Important

When model following control is used with the feedforward function, it is used to make optimum feedforward settings in the SERVOPACK. Therefore, model following control is not normally used together with either the speed feedforward input (VFF) or torque feedforward input (TFF) from the host controller. However, model following control can be used with the speed feedforward input (VFF) or torque feedforward input (TFF) if required. An unsuitable feedforward input may result in overshooting.

8.10.6 Related Parameters

The following parameters are automatically adjusted or used as reference when you execute vibration suppression.

Do not change the settings while vibration suppression is being executed.

Parameter	Name	Automatic Changes
Pn140	Model Following Control-Related Selections	Yes
Pn141	Model Following Control Gain	Yes
Pn142	Model Following Control Correction	No
Pn143	Model Following Control Bias in the Forward Direction	No
Pn144	Model Following Control Bias in the Reverse Direction	No
Pn145	Vibration Suppression 1 Frequency A	Yes
Pn146	Vibration Suppression 1 Frequency B	Yes
Pn147	Model Following Control Speed Feedforward Compensation	No
Pn14A	Vibration Suppression 2 Frequency	No
Pn14B	Vibration Suppression 2 Correction	No

Yes: The parameter is automatically set.

No: The parameter is not automatically set, but the setting is read during execution.

8.11 Speed Ripple Compensation

This section describes speed ripple compensation.

8.11.1 Outline

Speed ripple compensation reduces the amount of ripple in the motor speed due to torque ripple or cogging torque. You can enable speed ripple compensation to achieve smoother operation. To enable it, you must set up ripple compensation on the SigmaWin+.

⚠ WARNING

- **Speed ripple compensation requires operating the Servomotor and therefore presents hazards. Observe the following precaution.**
  Confirm safety around moving parts.
  This function involves automatic operation. Make sure that you can perform an emergency stop (to turn OFF the power supply) at any time.

Important

Execute speed ripple compensation only after adjusting the gains.
- Reset speed ripple compensation after you replace the Servomotor or SERVOPACK.
- Execute speed ripple compensation after jogging to a position that ensures a suitable range of motion.

8.11.2 Setting Up Speed Ripple Compensation

Restrictions

The following restrictions apply to the setup for speed ripple compensation.

◆ Systems for Which Execution Cannot Be Performed

There are no restrictions.

◆ Systems for Which Adjustments Cannot Be Made Accurately

Systems for which there is not a suitable range of motion

◆ Preparations

Always check the following before you set up speed ripple compensation.
- The main circuit power supply must be ON.
- The servo must be OFF.
- There must be no alarms or warnings.
- There must be no hard wire base block (HWBB).
- The parameters must not be write prohibited.

Applicable Tools

The following table lists the tools that you can use to set up speed ripple compensation and the applicable tool functions.

Tool	Function	Reference
Digital Operator	You cannot set up speed ripple compensation from the Digital Operator.	
SigmaWin+	***Diagnostic* – *Ripple Compensation***	☞ *Operating Procedure* on page 8-61

Operating Procedure

Use the following procedure to set up speed ripple compensation.

1. Click the Servo Drive Button in the workspace of the Main Window of the SigmaWin+.
2. Select **Ripple Compensation** in the Menu Dialog Box.
   The Ripple Compensation Dialog Box will be displayed.
3. Click the **OK** Button.

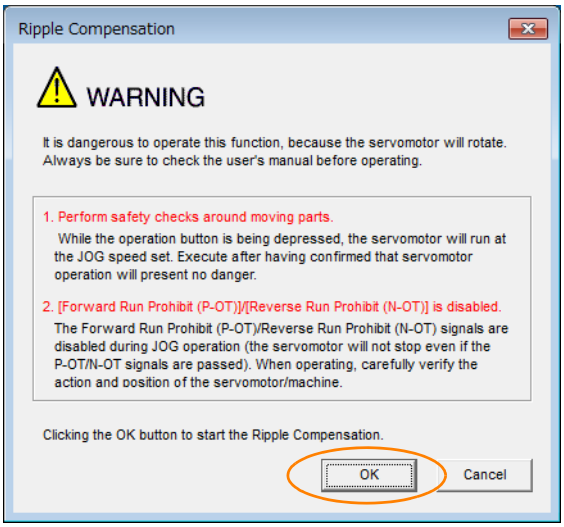

Information

1. Click the **Cancel** Button to cancel ripple compensation. The Main Window will return.
2. If write protection is set, the following dialog box will be displayed.

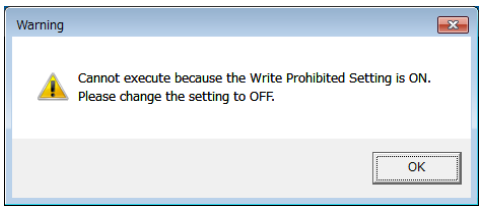

Click the **OK** Button to cancel write prohibition.

4. Click the **Edit** Button.

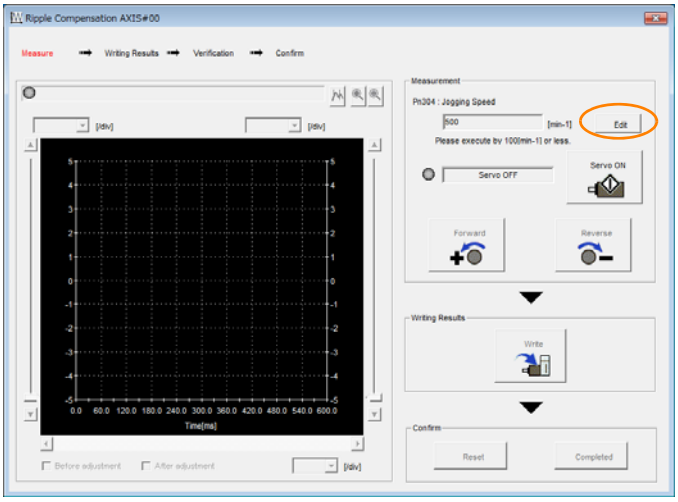

5. Enter the jogging speed in the **Input Value** Box and click the **OK** Button.

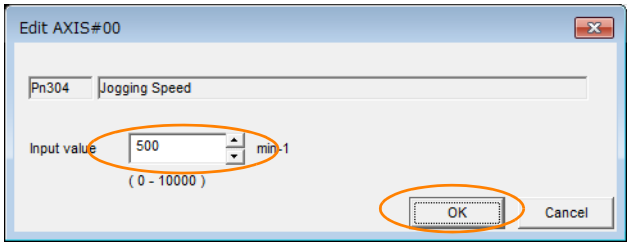

6. Click the **Servo ON** Button.

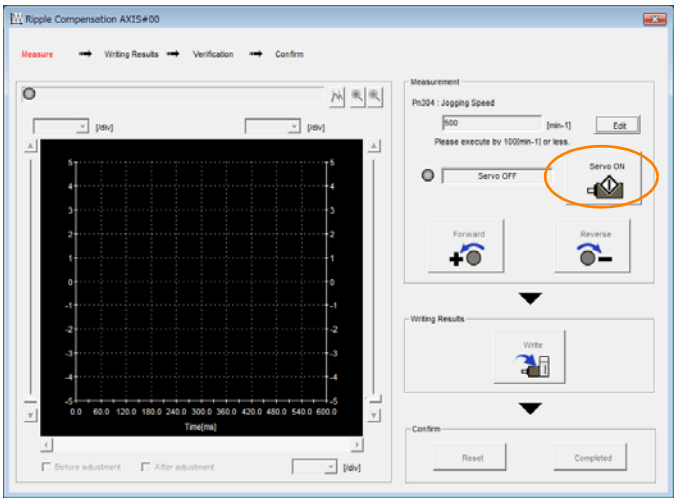

7. Click the **Forward** Button or the **Reverse** Button.
Measurement operation is started.
The Servomotor shaft will rotate at the preset jogging speed while you hold down the **Forward** or **Reverse** Button and the speed ripple will be measured.
The feedback speed and torque reference graph will be displayed in the Ripple Compensation Dialog Box during jogging.

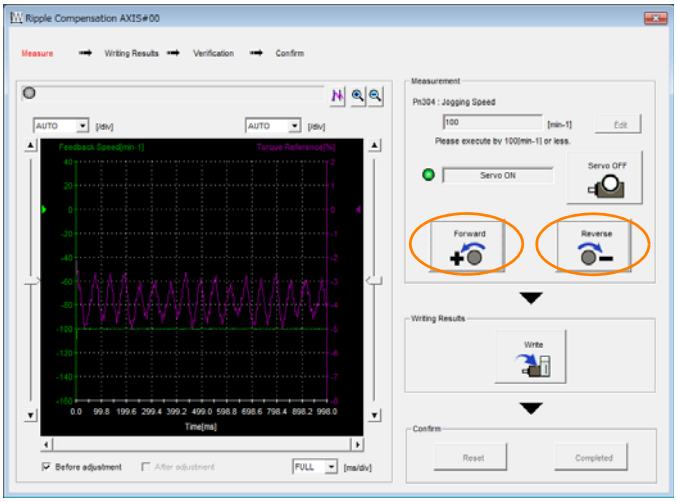

Important

If the measurement time (i.e., the jogging time) for the speed ripple is too short, speed ripple measurement will not be completed. The following dialog box will be displayed if speed ripple measurement was not completed.
Click the **OK** Button and repeat the measurement.

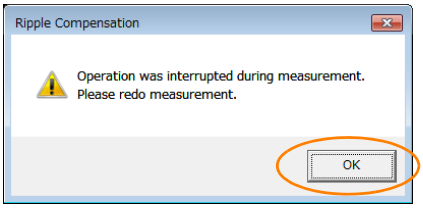

8. After speed ripple measurement has been completed, click the **Write** Button.
   The ripple compensation value will be written to the SERVOPACK.

9. After writing has been completed, click the **OK** Button.

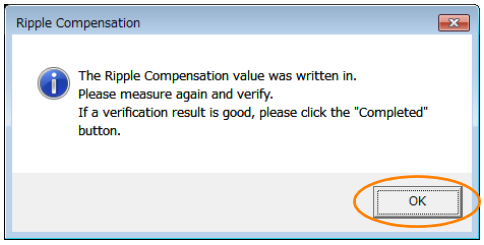

10. Click the **Forward** Button or the **Reverse** Button.
Verification operation is started.
The Servomotor shaft will rotate at the preset jogging speed while you hold down the **Forward** or **Reverse** Button.
The waveform with speed ripple compensation applied to it will be displayed.

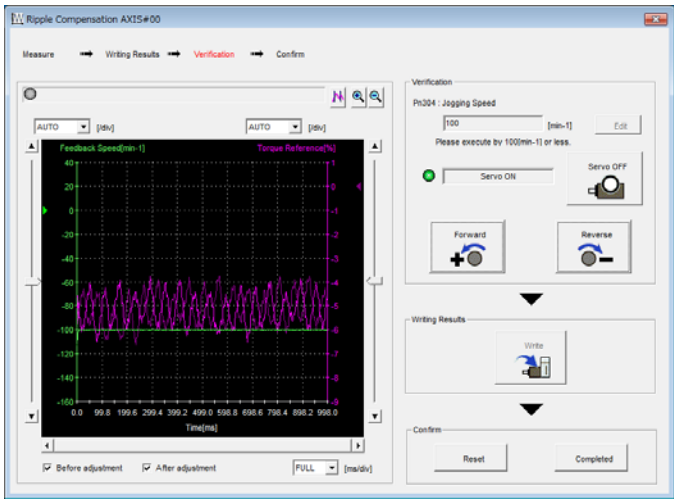

11. If the verification results are OK, click the **Completed** Button.

Information To discard the setup results, click the **Reset** Button.

This concludes the setup for speed ripple compensation.

8.11.3 Setting Parameters

The function is enabled when you perform the operating procedure on *Operating Procedure* on page 8-61. To cancel speed ripple compensation, use Pn423 = n.□□□0 (Disable speed ripple compensation) to disable it.

Parameter		Description	When Enabled	Classification
Pn423	n.□□□0 (default setting)	Disable speed ripple compensation.	Immediately	Setup
	n.□□□1	Enable speed ripple compensation.		

If you enable speed ripple compensation, a compensation reference will be applied to reduce ripple even when stopped at a 0 speed reference. In speed control mode, this may result in the Servomotor moving slightly. To prevent this, set Pn423 = n.□X□□ (Speed Ripple Compensation Enable Condition Selection) and Pn427 or Pn49F (Speed Ripple Compensation Enable Speed).

Parameter		Description	When Enabled	Classification
Pn423	n.□0□□ (default setting)	Speed reference	After restart	Setup
	n.□1□□	Motor Speed		

• For Rotary Servomotors

Pn427	Speed Ripple Compensation Enable Speed			Speed Position Torque	
	Setting Range	Setting Unit	Default Setting	When Enabled	Classification
	0 to 10,000	1 min^{-1}	0	Immediately	Tuning

• For Linear Servomotors

Pn49F	Speed Ripple Compensation Enable Speed			Speed Position Torque	
	Setting Range	Setting Unit	Default Setting	When Enabled	Classification
	0 to 10,000	1 mm/s	0	Immediately	Tuning

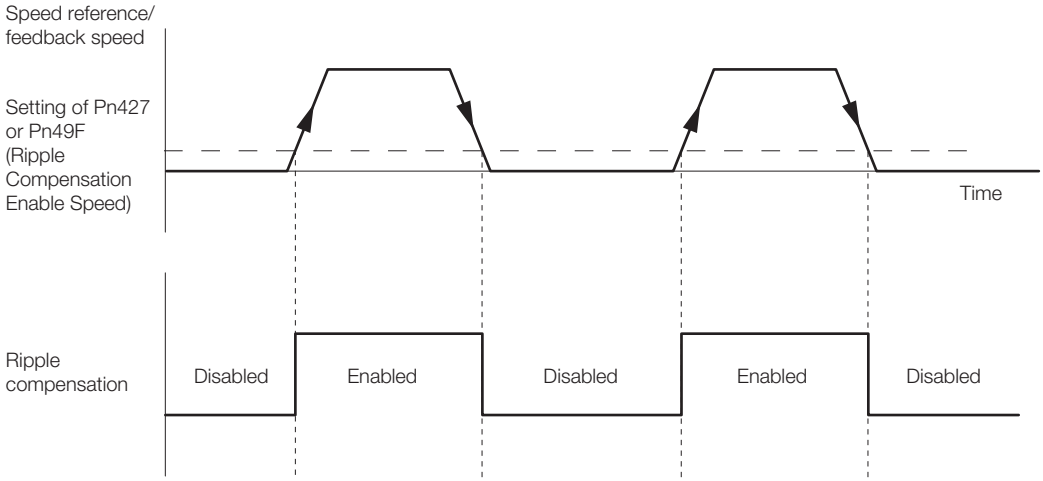

Speed Ripple Compensation Warnings

The speed ripple compensation value is specific to each Servomotor. If you replace the Servomotor while speed ripple compensation is enabled, an A.942 warning (Speed Ripple Compensation Information Disagreement) will occur to warn you.
You can use any of the following methods to clear A.942.

- Reset the speed ripple compensation value on the SigmaWin+.
- Disable speed ripple compensation (Pn423 = n.□□□0).
- Disable detection of A.942 (Pn423 = n.□□1□).

Parameter		Description	When Enabled	Classification
Pn423	n.□□0□ (default setting)	Detect A.942 alarms.	After restart	Setup
	n.□□1□	Do not detect A.942 alarms.		

8.12 Additional Adjustment Functions

This section describes the functions that you can use to make adjustments after you perform autotuning without a host reference, autotuning with a host reference, and custom tuning.

Function	Applicable Control Methods	Reference
Gain Switching	Position control, speed control, or torque control*	page 8-66
Friction Compensation	Position control or speed control	page 8-70
Current Control Mode Selection	Position control, speed control, or torque control	page 8-73
Current Gain Level Setting	Position control or speed control	page 8-74
Speed Detection Method Selection	Position control, speed control, or torque control	page 8-74
Backlash Compensation	Position Control	page 8-75

* Automatic gain switching is enabled only for position control.

8.12.1 Gain Switching

Two gain switching functions are available, manual selection and automatic switching. The manual switching function uses an external input signal to select the gains, and the automatic switching function changes the gains automatically.
You can use gain switching to shorten the positioning time by increasing the gains during positioning and suppressing vibration by decreasing the gains while stopping.

Parameter		Function	When Enabled	Classification
Pn139	n.□□□0 (default setting)	Use manual gain switching.	Immediately	Tuning
	n.□□□2	Use automatic gain switching pattern 1.		

Note: Pn139 = n.□□□1 is a reserved setting. Do not use this setting.

Refer to the following section for gain switching combinations.

☞ *Gain Switching Combinations* on page 8-66

Refer to the following sections for information on manual and automatic gain switching.

☞ *Manual Gain Switching* on page 8-67 and *Automatic Gain Switching* on page 8-67

Gain Switching Combinations

Selected Gains	Speed Loop Gain	Speed Loop Integral Time Constant	Position Loop Gain	Torque Reference Filter	Model Following Control Gain	Model Following Control Correction	Friction Compensation Gain
Gain Settings 1	Speed Loop Gain (Pn100)	Speed Loop Integral Time Constant (Pn101)	Position Loop Gain (Pn102)	First Stage First Torque Reference Filter Time Constant (Pn401)	Model Following Control Gain* (Pn141)	Model Following Control Correction* (Pn142)	Friction Compensation Gain (Pn121)
Gain Settings 2	Second Speed Loop Gain (Pn104)	Second Speed Loop Integral Time Constant (Pn105)	Second Position Loop Gain (Pn106)	First Stage Second Torque Reference Filter Time Constant (Pn412)	Second Model Following Control Gain* (Pn148)	Second Model Following Control Correction* (Pn149)	Second Friction Compensation Gain (Pn122)

* Gain switching for the model following control gain and the model following control gain correction is applicable only to manual gain switching.
To enable gain switching with these parameters, a gain switching input signal must be used and the following conditions must be met. If the conditions are not met, these parameters will not be changed even if the other parameters in the above table are changed.
- There must be no reference.
- The motor must be stopped.

Manual Gain Switching

With manual gain switching, you use G-SEL in the servo command output signals (SVCMD_IO) to change between gain settings 1 and gain settings 2.

Type	Command Name	Value	Meaning
Input	G-SEL in the servo command output signals (SVCMD_IO)	0	Changes the gain settings to gain settings 1.
		1	Changes the gain settings to gain settings 2.

Automatic Gain Switching

Automatic gain switching is enabled only for position control. The switching conditions are specified by using the following settings.

Parameter		Switching Condition	Selected Gains	Switching Waiting Time	Switching Time
Pn139	n.□□□2	Condition A satisfied	Gain settings 1 to gain settings 2	Gain Switching Waiting Time 1 Pn135	Gain Switching Time 1 Pn131
		Condition A not satisfied	Gain settings 2 to gain settings 1	Gain Switching Waiting Time 2 Pn136	Gain Switching Time 2 Pn132

Select one of the following settings for switching condition A.

Parameter		Position Control Gain Switching Condition A	For Control Methods Other Than Position Control (No Switching)	When Enabled	Classification
Pn139	n.□□0□ (default setting)	/COIN (Positioning Completion) signal ON	Gain settings 1 used.	Immediately	Tuning
	n.□□1□	/COIN (Positioning Completion) signal OFF	Gain settings 2 used.		
	n.□□2□	/NEAR (Near) signal ON	Gain settings 1 used.		
	n.□□3□	/NEAR (Near) signal OFF	Gain settings 2 used.		
	n.□□4□	Position reference filter output is 0 and position reference input is OFF.	Gain settings 1 used.		
	n.□□5□	Position reference input is ON.	Gain settings 2 used.		

Automatic Switching Pattern 1 (Pn139 = n.□□□2)

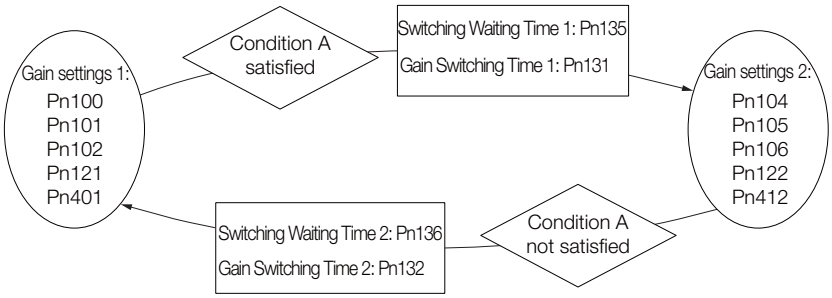

◆ Relationship between the Waiting Times and Switching Times for Gain Switching

In this example, an ON /COIN (Positioning Completion) signal is set as condition A for automatic gain switching. The position loop gain is changed from the value in Pn102 (Position Loop Gain) to the value in Pn106 (Second Position Loop Gain). When the /COIN signal turns ON, the switching operation begins after the waiting time (Pn135). The switching operation changes the position loop gain linearly from the gain set in Pn102 to the gain set in Pn106 over the switching time (Pn131).

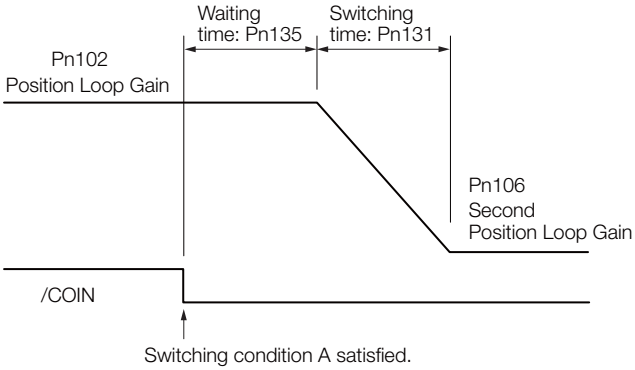

Information You can use gain switching for either PI control or I-P control (Pn10B = n.□□0□ or □□1□).

Related Parameters

Pn100	Speed Loop Gain			Speed Position	
	Setting Range	Setting Unit	Default Setting	When Enabled	Classification
	10 to 20,000	0.1 Hz	400	Immediately	Tuning
Pn101	Speed Loop Integral Time Constant			Speed Position	
	Setting Range	Setting Unit	Default Setting	When Enabled	Classification
	15 to 51,200	0.01 ms	2,000	Immediately	Tuning
Pn102	Position Loop Gain			Position	
	Setting Range	Setting Unit	Default Setting	When Enabled	Classification
	10 to 20,000	0.1/s	400	Immediately	Tuning
Pn401	First Stage First Torque Reference Filter Time Constant			Speed Position Torque	
	Setting Range	Setting Unit	Default Setting	When Enabled	Classification
	0 to 65,535	0.01 ms	100	Immediately	Tuning
Pn141	Model Following Control Gain			Position	
	Setting Range	Setting Unit	Default Setting	When Enabled	Classification
	10 to 20,000	0.1/s	500	Immediately	Tuning
Pn142	Model Following Control Correction			Position	
	Setting Range	Setting Unit	Default Setting	When Enabled	Classification
	500 to 2,000	0.1%	1,000	Immediately	Tuning
Pn121	Friction Compensation Gain			Speed Position	
	Setting Range	Setting Unit	Default Setting	When Enabled	Classification
	10 to 1,000	1%	100	Immediately	Tuning
Pn104	Second Speed Loop Gain			Speed Position	
	Setting Range	Setting Unit	Default Setting	When Enabled	Classification
	10 to 20,000	0.1 Hz	400	Immediately	Tuning
Pn105	Second Speed Loop Integral Time Constant			Speed Position	
	Setting Range	Setting Unit	Default Setting	When Enabled	Classification
	15 to 51,200	0.01 ms	2,000	Immediately	Tuning

Continued from previous page.

Pn106	Second Position Loop Gain			Position	
	Setting Range	Setting Unit	Default Setting	When Enabled	Classification
	10 to 20,000	0.1/s	400	Immediately	Tuning
Pn412	First Stage Second Torque Reference Filter Time Constant			Speed Position Torque	
	Setting Range	Setting Unit	Default Setting	When Enabled	Classification
	0 to 65,535	0.01 ms	100	Immediately	Tuning
Pn148	Second Model Following Control Gain			Position	
	Setting Range	Setting Unit	Default Setting	When Enabled	Classification
	10 to 20,000	0.1/s	500	Immediately	Tuning
Pn149	Second Model Following Control Correction			Position	
	Setting Range	Setting Unit	Default Setting	When Enabled	Classification
	500 to 2,000	0.1%	1,000	Immediately	Tuning
Pn122	Second Friction Compensation Gain			Speed Position	
	Setting Range	Setting Unit	Default Setting	When Enabled	Classification
	10 to 1,000	1%	100	Immediately	Tuning

Parameters Related to Automatic Gain Switching

Pn131	Gain Switching Time 1			Position	
	Setting Range	Setting Unit	Default Setting	When Enabled	Classification
	0 to 65,535	1 ms	0	Immediately	Tuning
Pn132	Gain Switching Time 2			Position	
	Setting Range	Setting Unit	Default Setting	When Enabled	Classification
	0 to 65,535	1 ms	0	Immediately	Tuning
Pn135	Gain Switching Waiting Time 1			Position	
	Setting Range	Setting Unit	Default Setting	When Enabled	Classification
	0 to 65,535	1 ms	0	Immediately	Tuning
Pn136	Gain Switching Waiting Time 2			Position	
	Setting Range	Setting Unit	Default Setting	When Enabled	Classification
	0 to 65,535	1 ms	0	Immediately	Tuning

Related Monitoring

- SigmaWin+
  You can monitor gain switching with the status monitor or with tracing.
- Analog Monitors

Parameter	Analog Monitor	Monitor Name	Output Value	Description
Pn006 Pn007	n.□□0B	Active Gain Monitor	1 V	Gain settings 1 are enabled.
			2 V	Gain settings 2 are enabled.

8.12.2 Friction Compensation

Friction compensation is used to compensate for viscous friction fluctuations and regular load fluctuations.

You can automatically adjust friction compensation with autotuning without a host reference, autotuning with a host reference, or custom tuning, or you can manually adjust it with the following procedure.

Required Parameter Settings

The following parameter settings are required to use friction compensation.

Parameter		Function	When Enabled	Classification
Pn408	n.0□□□ (default setting)	Disable friction compensation.	Immediately	Setup
	n.1□□□	Enable friction compensation.		

Pn121	Friction Compensation Gain			Speed Position	
	Setting Range	Setting Unit	Default Setting	When Enabled	Classification
	10 to 1,000	1%	100	Immediately	Tuning
Pn122	Second Friction Compensation Gain			Speed Position	
	Setting Range	Setting Unit	Default Setting	When Enabled	Classification
	10 to 1,000	1%	100	Immediately	Tuning
Pn123	Friction Compensation Coefficient			Speed Position	
	Setting Range	Setting Unit	Default Setting	When Enabled	Classification
	0 to 100	1%	0	Immediately	Tuning
Pn124	Friction Compensation Frequency Correction			Speed Position	
	Setting Range	Setting Unit	Default Setting	When Enabled	Classification
	-10,000 to 10,000	0.1 Hz	0	Immediately	Tuning
Pn125	Friction Compensation Gain Correction			Speed Position	
	Setting Range	Setting Unit	Default Setting	When Enabled	Classification
	1 to 1,000	1%	100	Immediately	Tuning

Operating Procedure for Friction Compensation

Use the following procedure to perform friction compensation.

⚠ CAUTION

- Before you execute friction compensation, set the moment of inertia ratio (Pn103) as accurately as possible. If the setting greatly differs from the actual moment of inertia, vibration may occur.

Step	Operation
1	Set the following parameters related to friction compensation to their default settings. Friction compensation gain (Pn121): 100 Second friction compensation gain (Pn122): 100 Friction compensation coefficient (Pn123): 0 Friction compensation frequency correction (Pn124): 0 Friction compensation gain correction (Pn125): 100 Note: Always use the default settings for the friction compensation frequency correction (Pn124) and friction compensation gain correction (Pn125).
2	Gradually increase the friction compensation coefficient (Pn123) to check the effect of friction compensation. Note: Usually, set the friction compensation coefficient (Pn123) to 95% or less. If the effect is insufficient, increase the friction compensation gain (Pn121) by 10% increments until vibration stops. Effect of Adjusted Parameters Pn121: Friction Compensation Gain and Pn122: Second Friction Compensation Gain These parameters set the response to external disturbances. The higher the setting is, the better the response will be. If the machine has a resonance frequency, however, vibration may occur if the setting is too high. Pn123: Friction Compensation Coefficient This parameter sets the effect of friction compensation. The higher the setting is, the more effective friction compensation will be. If the setting is too high, however, vibration will occur more easily. Usually, set the value to 95% or less.
3	Effect of Adjustments The following graphs show the response with and without adjustment. 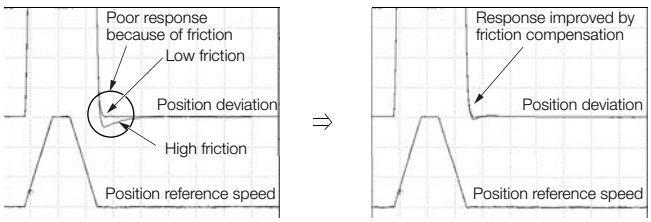 Before Friction Compensation After Friction Compensation

8.12.3 Gravity Compensation

When the Servomotor is used with a vertical axis, gravity compensation prevents the moving part from falling due to the machine's own weight when the brake is released.

SERVOPACKs with software version 0023 or higher support gravity compensation.

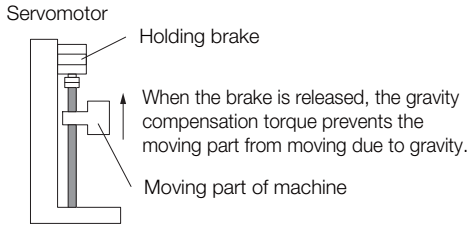

A timing chart for when the moving part is raised then lowered is provided below.

Refer to the following section for details on brake operation timing.

☞ *5.12.1 **Brake Operating Sequence*** on page 5-34

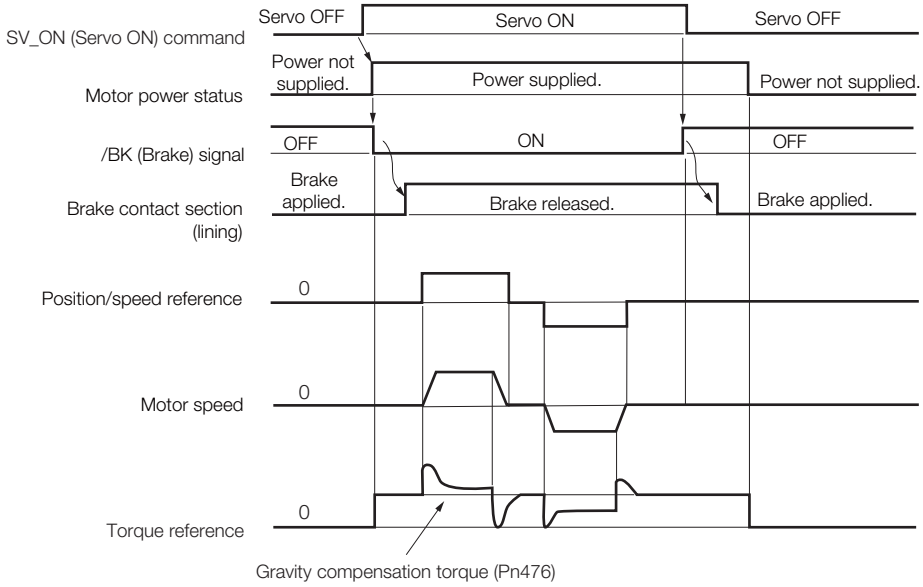

Required Parameter Settings

The following parameter settings are required to use gravity compensation.

Parameter		Description	When Enabled	Classification
Pn475	n.□□□0 (default setting)	Disable gravity compensation.	After restart	Setup
	n.□□□1	Enable gravity compensation.		

Pn476	Gravity Compensation Torque			Speed Position Torque	
	Setting Range	Setting Unit	Default Setting	When Enabled	Classification
	-1,000 to 1,000	0.1%	0	Immediately	Tuning

Operating Procedure for Gravity Compensation

Use the following procedure to perform gravity compensation.

1. Set Pn475 to n.□□□1 (Enable gravity compensation).
2. To enable changes to the settings, turn the power supply to the SERVOPACK OFF and ON again.
3. Use SigmaWin+ or an analog monitor to find the torque reference value when the motor is stopped with the servo ON.
4. Set the torque reference value found in step 3 in Pn476 (Gravity Compensation Torque).
5. Turn the servo ON and OFF a few times and fine-tune Pn476 so that the moving part of the machine does not fall.

8.12.4 Current Control Mode Selection

Current control mode selection reduces high-frequency noise while the Servomotor is being stopped.
The setting depends on the capacity of the SERVOPACK.
To use current control mode selection, use current control mode 2 (set Pn009 to n.□□1□ or n.□□2□).

- SERVOPACK Models SGD7S-R70A, -R90A, -1R6A, -2R8A, -3R8A, -5R5A, and -7R6A

Parameter		Meaning	When Enabled	Classification
Pn009	n. □□0□	Use current control mode 1.	After restart	Tuning
	n. □□1□ (default setting)			
	n. □□2□	Use current control mode 2 (low noise).		

- SERVOPACK Models SGD7S-120A, -180A, -200A, -330A, -470A, -550A, -590A, and -780A

Parameter		Meaning	When Enabled	Classification
Pn009	n. □□0□	Use current control mode 1.	After restart	Tuning
	n. □□1□ (default setting)	Use current control mode 2 (low noise).		
	n. □□2□			

Important

If current control mode 2 is selected, the load ratio may increase while the Servomotor is being stopped.

8.12.5 Current Gain Level Setting

You can set the current gain level to reduce noise by adjusting the parameter for current control inside the SERVOPACK according to the speed loop gain (Pn100). The noise level can be reduced by decreasing the current gain level (Pn13D) from its default setting of 2,000% (disabled). However, if the setting is decreased, the level of noise will be lowered, but the response characteristic of the SERVOPACK will also be reduced. Adjust the current gain level within the range that maintains the SERVOPACK response characteristic.

Pn13D	Current Gain Level			Speed Position	
	Setting Range	Setting Unit	Default Setting	When Enabled	Classification
	100 to 2,000	1%	2,000	Immediately	Tuning

Important

If the current gain level is changed, the response characteristic of the speed loop will also change. Servo tuning must therefore be performed again.

8.12.6 Speed Detection Method Selection

You can use the speed detection method selection to ensure smooth Servomotor speed changes during operation. To ensure smooth motor speed changes during operation, set Pn009 to n.□1□□ (Use speed detection 2).

With a Linear Servomotor, you can reduce the noise level of the running motor when the linear encoder scale pitch is large.

Parameter		Meaning	When Enabled	Classification
Pn009	n. □0□□ (default setting)	Use speed detection 1.	After restart	Tuning
	n. □1□□	Use speed detection 2.		

Important

If the speed detection method is changed, the response characteristic of the speed loop will also change. Servo tuning must therefore be performed again.

8.12.7 Speed Feedback Filter

You can set a first order lag filter for the speed feedback in the speed loop. This ensures smooth changes in the feedback speed to reduce vibration. If a large value is set, it will increase the delay and make response slower.

Pn308	Speed Feedback Filter Time Constant			Speed Position	
	Setting Range	Setting Unit	Default Setting	When Enabled	Classification
	0 to 65,535 (0.00 ms to 655.35 ms)	0.01 ms	0 (0.00 ms)	Immediately	Setup

8.12.8 Backlash Compensation

Outline

If you drive a machine that has backlash, there will be deviation between the travel distance in the position reference that is managed by the host controller and the travel distance of the actual machine. Use backlash compensation to add the backlash compensation value to the position reference and use the result to drive the Servomotor. This will ensure that the travel distance of the actual machine will be the same as the travel distance in the host controller.

Note: 1. Backlash compensation can be used only with a Rotary Servomotor.
2. Backlash compensation can be used only for position control.

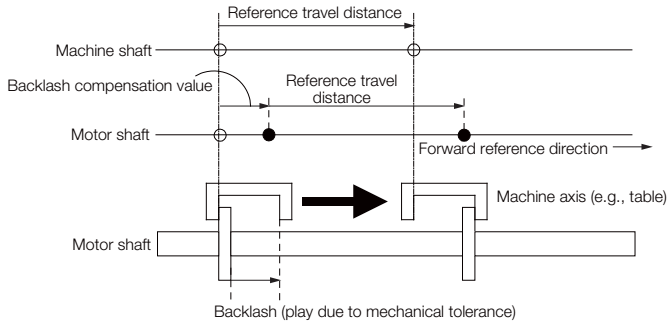

Related Parameters

Set the following parameters to use backlash compensation.

◆ Backlash Compensation Direction

Set the direction in which to apply backlash compensation.

Parameter		Meaning	When Enabled	Classification
Pn230	n. □□□0 (default setting)	Compensate forward references.	After restart	Setup
	n. □□□1	Compensate reverse references.		

◆ Backlash Compensation Value

Set the amount of backlash compensation to add to the position reference.
The amount is set in increments of 0.1 reference unit. However, when the amount is converted to encoder pulses, it is rounded off at the decimal point.

Example
When Pn231 = 6,553.6 [reference units] and electronic gear ratio (Pn20E/Pn210) = 4/1:
6,553.6 × 4 = 26,214.4 [pulses]
⇒ The backlash compensation will be 26,214 encoder pulses.

Pn231	Backlash Compensation				Position
	Setting Range	Setting Unit	Default Setting	When Enabled	Classification
	-500,000 to 500,000	0.1 reference units	0	Immediately	Setup

Important

- The backlash compensation value is restricted by the following formula. Backlash compensation is not performed if this condition is not met.

$$Pn231 \leq \frac{Pn210}{Pn20E} \times \frac{\text{Maximum motor speed [min}^{-1}\text{]}}{60} \times \text{Encoder resolution*} \times 0.00025$$

*Refer to the following section for the encoder resolution.
☞ *5.15 Electronic Gear Settings* on page 5-44
With fully-closed loop control, substitute the number of external encoder pulses per motor rotation for the encoder resolution in the above formula.

Example 1:
Pn20E = 4, Pn210 = 1, Maximum motor speed = 6,000 [min^{-1}], and Encoder resolution = 16,777,216 (24 bits)
1/4 × 6,000/60 × 16,777,216 × 0.00025 = 104,857.6 [reference units]
⇒ The backlash compensation will be limited to 104,857.6 reference units.

Example 2:
Pn20E = 4, Pn210 = 1, Maximum motor speed = 6,000 [min^{-1}], Number of External Encoder Pitches (Pn20A) = 500, and Use of the JZDP-H00□-000 (signal resolution: 1/256):
1/4 × 6,000/60 × (500 × 256) × 0.00025 = 800.0 [reference units]
⇒ The backlash compensation will be limited to 800.0 reference units.

- Do not exceed the upper limit of the backlash compensation value. You can check the upper limit on the operation monitor of the SigmaWin+.

◆ Backlash Compensation Time Constant

You can set a time constant for a first order lag filter for the backlash compensation value (Pn231) that is added to the position reference.
If you set Pn233 (Backlash Compensation Time Constant) to 0, the first order lag filter is disabled.

Pn233	Backlash Compensation Time Constant				Position
	Setting Range	Setting Unit	Default Setting	When Enabled	Classification
	0 to 65,535	0.01 ms	0	Immediately	Setup

Note: Changes to the settings are applied when there is no reference pulse input and the Servomotor is stopped. The current operation is not affected if the setting is changed during Servomotor operation.

Related Monitoring

You can monitor the following values on the operation monitor of the SigmaWin+.

Displayed Value	Setting Unit
Current Backlash Compensation Value	0.1 reference units
Backlash Compensation Value Setting Limit	0.1 reference units

Compensation Operation

This section describes the operation that is performed for backlash compensation.

Note: The following figures are for when backlash compensation is applied to references in the forward direction (Pn230 = n.□□□0). The following monitor information is provided in the figures: TPOS (target position in the reference coordinate system), POS (reference position in the reference coordinate system), and APOS (feedback position in the machine coordinate system). The monitor information includes the feedback position in machine coordinate system (APOS) and other feedback information.
The backlash compensation value is subtracted from the feedback positions in the monitor information, so it is not necessary for the host controller to consider the backlash compensation value.

⚠ CAUTION

- The encoder divided pulse output will output the number of encoder pulses for which driving was actually performed, including the backlash compensation value. If you use the encoder output pulses for position feedback at the host controller, you must consider the backlash compensation value.

◆ Operation When the Servo Is ON

The backlash compensation value (Pn231) is added in the backlash compensation direction when the servo is ON (i.e.,while power is supplied to the motor) and a reference is input in the same direction as the backlash compensation direction (Pn230 = n.□□□X).
When there is a reference input in the direction opposite to the backlash compensation direction, the backlash compensation value is not added (i.e., backlash compensation is not performed).

The relationship between APOS and the motor shaft position is as follows:

- If a reference is input in the compensation direction: APOS = Motor shaft position – Pn231
- If a reference is input in the direction opposite to the compensation direction: APOS = Motor shaft position

The following figure shows driving the Servomotor in the forward direction from target position TPOS0 to TPOS1 and then to TPOS2, and then returning from TPOS2 to TPOS1 and then to TPOS0.
Backlash compensation is applied when moving from TPOS0 to TPOS1, but not when moving from TPOS2 to TPOS1.

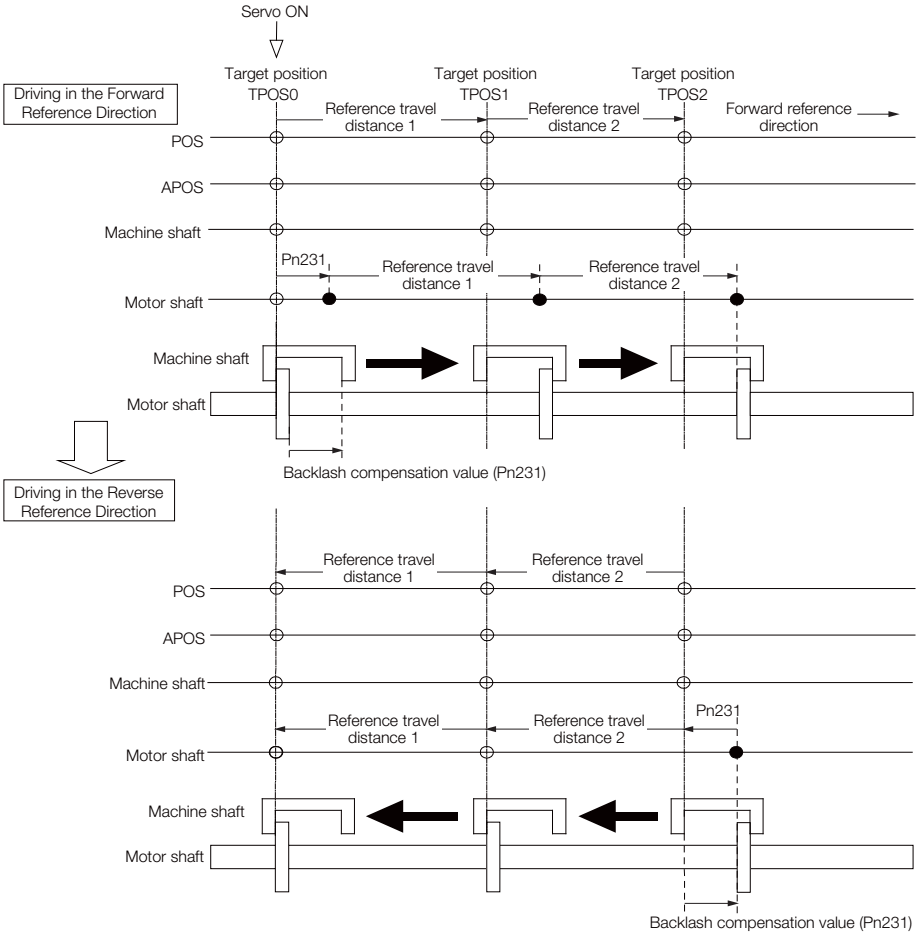

◆ Operation When the Servo Is OFF

Backlash compensation is not applied when the servo is OFF (i.e., when power is not supplied to motor). Therefore, the reference position POS is moved by only the backlash compensation value.
The relationship between APOS and the motor shaft position is as follows:

- When servo is OFF: APOS = Servomotor shaft position

The following figure shows what happens when the servo is turned OFF after driving the Servomotor in the forward direction from target position TPOS0 to TPOS1. Backlash compensation is not applied when the servo is OFF. (The SERVOPACK manages the position data so that APOS and POS are the same.)

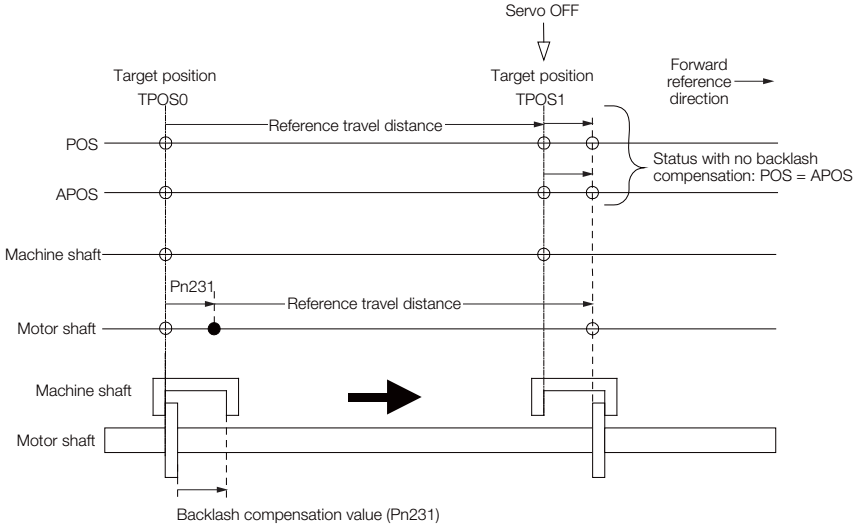

◆ Operation When There Is Overtravel

When there is overtravel (i.e., when driving is prohibited due to an overtravel signal or software limit), the operation is the same as for when the servo is OFF (◆ *Operation When the Servo Is OFF* on page 8-78), i.e., backlash compensation is not applied.

◆ Operation When Control Is Changed

Backlash compensation is performed only for position control.
Backlash compensation is not applied when position control is changed to any other control method.
Backlash compensation is applied in the same way as when the servo is ON (◆ *Operation When the Servo Is ON* on page 8-77) if any other control method is changed to position control.

Related Monitoring

You can monitor the following values on the operation monitor of the SigmaWin+.

Displayed Value	Unit	Specification
Input Reference Pulse Speed	min^{-1}	Displays the input reference pulse speed before backlash compensation.
Position Deviation	Reference units	Displays the position deviation for the position reference after backlash compensation.
Input Reference Pulse Counter	Reference units	Displays the input reference pulse counter before backlash compensation.
Feedback Pulse Counter	Encoder pulses	Displays the number of pulses from the actually driven motor encoder.
Fully-Closed Feedback Pulse Counter	External encoder resolution	Displays the number of pulses of the actually driven external encoder.
Feedback Pulse Counter	Reference units	Displays the number of pulses from the actually driven encoder in reference units.

MECHATROLINK Monitor Information

This section describes the information that is set for the MECHATROLINK monitor information (monitor 1, monitor 2, monitor 3, and monitor 4) and the backlash compensation operation.

Monitor Code	Abbreviation	Description	Unit	Remarks
0	POS	Reference position in the reference coordinate system (after the position reference filter)	Reference units	–
1	MPOS	Reference position	Reference units	–
2	PERR	Position deviation	Reference units	–
3	APOS	Feedback position in machine coordinate system	Reference units	Feedback position with the backlash compensation subtracted
4	LPOS	Feedback latch position in the machine coordinate system	Reference units	Feedback position with the backlash compensation subtracted
5	IPOS	Reference position in the reference coordinate system (before the position reference filter)	Reference units	–
6	TPOS	Target position in the reference coordinate system	Reference units	–
E	OMN1	Option monitor 1 (selected with Pn824)	–	–
F	OMN2	Option monitor 2 (selected with Pn825)	–	–

Parameter		Monitor Information	Output Unit	Remarks
Pn824 Pn825	0003h	Position deviation (lower 32 bits)	Reference units	–
	0004h	Position deviation (upper 32 bits)	Reference units	–
	000Ah	PG count (lower 32 bits)	Reference units	Count value of the actually driven motor encoder
	000Bh	PG count (upper 32 bits)	Reference units	
	000Ch	FPG count (lower 32 bits)	Reference units	Count value of the actually driven external encoder
	000Dh	FPG count (upper 32 bits)	Reference units	
	0017h	Input reference pulse speed	min^{-1}	–
	0018h	Position deviation	Reference units	–
	001Ch	Input reference pulse counter	Reference units	–
	001Dh	Feedback pulse counter	Encoder pulses	–
	001Eh	Fully-closed feedback pulse counter	External encoder resolution	–
	0080h	Previous value of latched feedback position (LPOS)	Encoder pulses	Feedback position with the backlash compensation subtracted

◆ Related Monitoring Diagrams

The following symbols are used in the related monitoring diagrams.

[A]: Analog monitor

[U]: Monitor mode (Un monitor)

[O]: Output signal

[T]: Trace data

[M]: MECHATROLINK monitor information

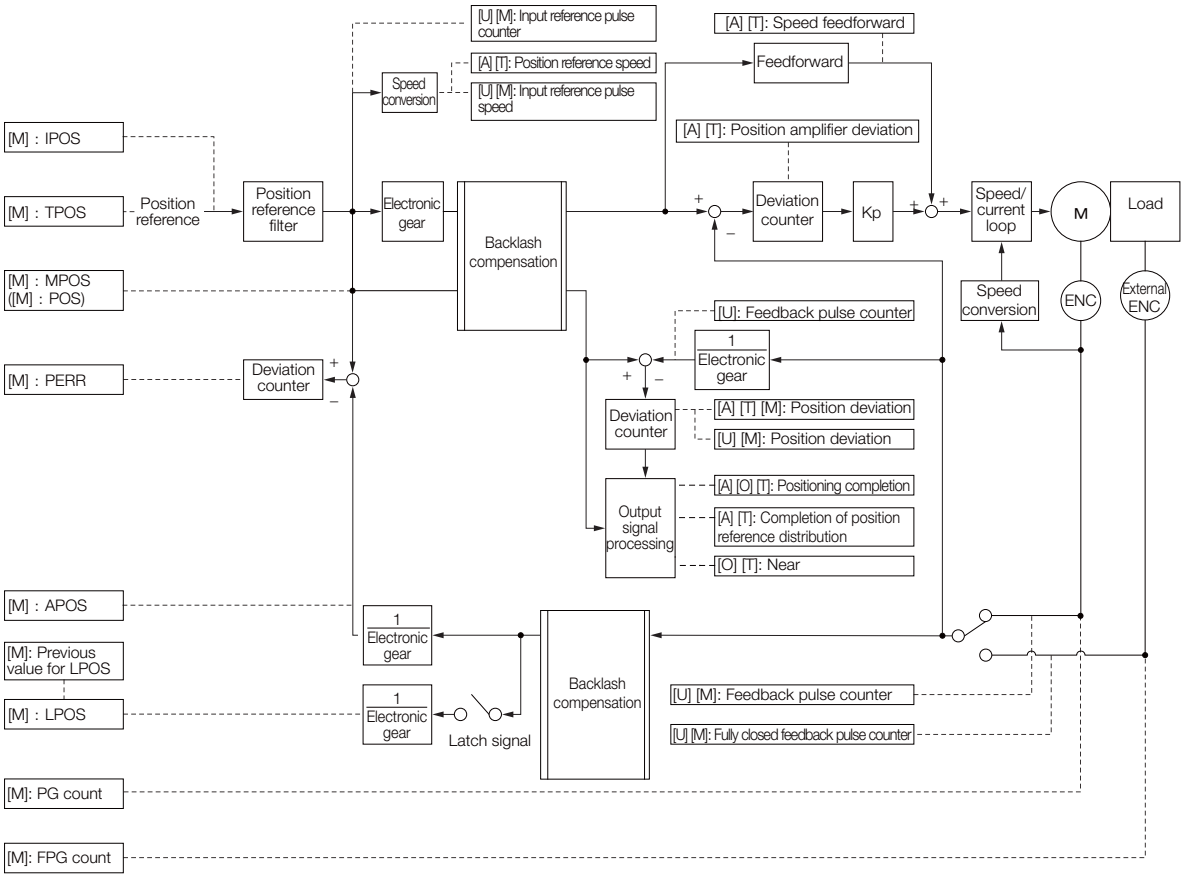

8.13 Manual Tuning

This section describes manual tuning.

8.13.1 Tuning the Servo Gains

Servo Gains

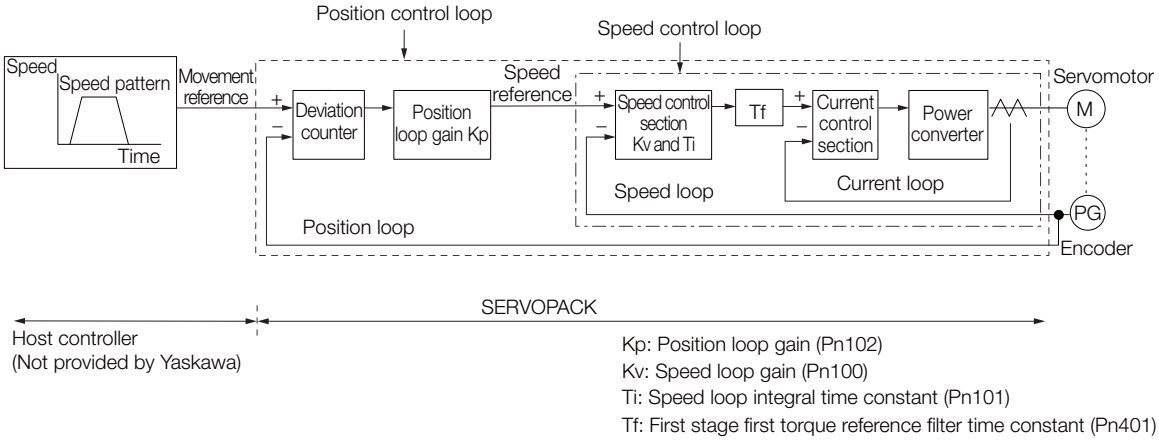

In order to manually tune the servo gains, you must understand the configuration and characteristic of the SERVOPACK and adjust the servo gains individually. In most cases, if you greatly change any one parameter, you must adjust the other parameters again. To check the response characteristic, you must prepare a measuring instrument to monitor the output waveforms from the analog monitor.

The SERVOPACK has three feedback systems (the position loop, speed loop, and current loop), and the response characteristic must be increased more with the inner loops. If this relationship is not maintained, the response characteristic will suffer and vibration will occur more easily.

A sufficient response characteristic is ensured for the current loop. There is never a need for it to be adjusted by the user.

Outline

You can use manual tuning to set the servo gains in the SERVOPACK to increase the response characteristic of the SERVOPACK. For example, you can reduce the positioning time for position control.

Use manual tuning in the following cases.

- When tuning with autotuning without a host reference or autotuning with a host reference does not achieve the desired results
- When you want to increase the servo gains higher than the gains that resulted from autotuning without a host reference or autotuning with a host reference
- When you want to determine the servo gains and moment of inertia ratio yourself

You start manual tuning either from the default parameter settings or from the gain settings that resulted from autotuning without a host reference or autotuning with a host reference.

Applicable Tools

You can monitor the servo gains with the SigmaWin+ or with the analog monitor.

Precautions

Vibration may occur while you are tuning the servo gains. We recommend that you enable vibration alarms (Pn310 = n.□□□2) to detect vibration. Refer to the following section for information on vibration detection.

☞ *6.11 Initializing the Vibration Detection Level* on page 6-51

Vibration alarms are not detected for all vibration. Also, an emergency stop method is necessary to stop the machine safely when an alarm occurs. You must provide an emergency stop device and activate it immediately whenever vibration occurs.

Tuning Procedure Example (for Position Control or Speed Control)

Step	Description
1	Adjust the first stage first torque reference filter time constant (Pn401) so that vibration does not occur.
2	Increase the position loop gain (Pn100) and reduce the speed loop integral time constant (Pn101) as far as possible within the range that does not cause machine vibration.
3	Repeat steps 1 and 2 and return the settings about 10% to 20% from the values that you set.
4	For position control, increase the position loop gain (Pn102) within the range that does not cause vibration.

Information

If you greatly change any one servo gain parameter, you must adjust the other parameters again. Do not increase the setting of just one parameter. As a guideline, adjust the settings of the servo gains by approximately 5% each. As a rule, change the servo parameters in the following order.

- To Increase the Response Speed

1. Reduce the torque reference filter time constant.
2. Increase the speed loop gain.
3. Decrease the speed loop integral time constant.
4. Increase the position loop gain.

- To Reduce Response Speed and to Stop Vibration and Overshooting

1. Reduce the position loop gain.
2. Increase the speed loop integral time constant.
3. Decrease the speed loop gain.
4. Increase the torque filter time constant.

Adjusted Servo Gains

You can set the following gains to adjust the response characteristic of the SERVOPACK.

- Pn100: Speed Loop Gain
- Pn101: Speed Loop Integral Time Constant
- Pn102: Position Loop Gain
- Pn401: First Stage First Torque Reference Filter Time Constant

◆ Position Loop Gain

The position loop gain determines the response characteristic of the position loop in the SERVOPACK. If you can increase the setting of the position loop gain, the response characteristic will improve and the positioning time will be shortened. However, you normally cannot increase the position loop gain higher than the inherit vibration frequency of the machine system. Therefore, to increase the setting of the position loop gain, you must increase the rigidity of the machine to increase the inherit vibration frequency of the machine.

Pn102	Position Loop Gain				Position
	Setting Range	Setting Unit	Default Setting	When Enabled	Classification
	10 to 20,000	0.1/s	400	Immediately	Tuning

Information

For machines for which a high position loop gain (Pn102) cannot be set, overflow alarms can occur during high-speed operation. If that is the case, you can increase the setting of the following parameter to increase the level for alarm detection.
Use the following condition as a guideline for determining the setting.

$$\text{Pn520} \geq \frac{\text{Maximum feed speed [reference units/s]}}{\text{Pn102} \div 10\ (1/\text{s})} \times 2.0$$

If you use a position reference filter, transient deviation will increase due to the filter time constant. When you make the setting, consider deviation accumulation that may result from the filter.

Pn520	Position Deviation Overflow Alarm Level				Position
	Setting Range	Setting Unit	Default Setting	When Enabled	Classification
	1 to 1,073,741,823	1 reference unit	5,242,880	Immediately	Setup

◆ Speed Loop Gain

This parameter determines the response characteristic of the speed loop. If the response characteristic of the speed loop is low, it becomes a delay factor for the position loop located outside of the speed loop. This will result in overshooting and vibration in the speed reference. Therefore, setting the speed loop gain as high as possible within the range that will not cause the machine system to vibrate will produce a stable servo system with a good response characteristic.

Pn100	Speed Loop Gain				Speed Position Torque
	Setting Range	Setting Unit	Default Setting	When Enabled	Classification
	10 to 20,000	0.1 Hz	400	Immediately	Tuning

$$\text{Setting of Pn103} = \frac{\text{Load moment of inertia at motor shaft } (J_L)}{\text{Servomotor moment of inertia } (L_M)} \times 100(\%)$$

The default setting of Pn103 (Moment of Inertia Ratio) is 100. Before you tune the servo, calculate the moment of inertia ratio with the above formula and set Pn103 to the calculation result.

Pn103	Moment of Inertia Ratio				Speed Position Torque
	Setting Range	Setting Unit	Default Setting	When Enabled	Classification
	0 to 20,000	1%	100	Immediately	Tuning

◆ Speed Loop Integral Time Constant

To enable response to even small inputs, the speed loop has an integral element. The integral element becomes a delay factor in the servo system. If the time constant is set too high, overshooting will occur, positioning settling time will increase, and the response characteristic will suffer.

Pn101	Speed Loop Integral Time Constant				Speed Position
	Setting Range	Setting Unit	Default Setting	When Enabled	Classification
	15 to 51,200	0.01 ms	2,000	Immediately	Tuning

◆ Torque Reference Filter

As shown in the following diagram, the torque reference filter contains a first order lag filter and notch filters arranged in series, and each filter operates independently.

The notch filters can be enabled and disabled with Pn408 = n.□X□X and Pn416 = n.□XXX.

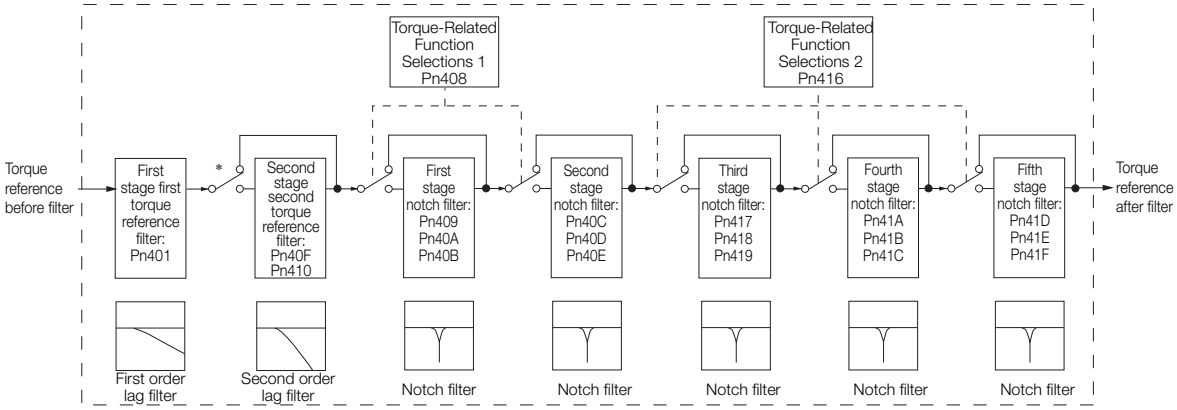

* The second stage second torque reference filter is disabled when Pn40F is set to 5,000 (default setting) and it is enabled when Pn40F is set to a value lower than 5,000.

■ Torque Reference Filter

If you suspect that machine vibration is being caused by the Servo Drive, try adjusting the torque reference filter time constant. This may stop the vibration. The lower the value, the better the control response characteristic will be, but there may be a limit depending on the machine conditions.

Pn401	First Stage First Torque Reference Filter Time Constant			Speed Position Torque	
	Setting Range	Setting Unit	Default Setting	When Enabled	Classification
	0 to 65,535	0.01 ms	100	Immediately	Tuning
Pn40F	Second Stage Second Torque Reference Filter Frequency			Speed Position Torque	
	Setting Range	Setting Unit	Default Setting	When Enabled	Classification
	100 to 5,000	1 Hz	5,000*	Immediately	Tuning
Pn410	Second Stage Second Torque Reference Filter Q Value			Speed Position Torque	
	Setting Range	Setting Unit	Default Setting	When Enabled	Classification
	50 to 100	0.01	50	Immediately	Tuning

* The filter is disabled if you set the parameter to 5,000.

■ Notch Filters

The notch filter can eliminate specific frequency elements generated by the vibration of sources such as resonance of the shaft of a ball screw.

The notch filter puts a notch in the gain curve at the specific vibration frequency (called the notch frequency). The frequency components near the notch frequency can be reduced or removed with a notch filter.

Notch filters are set with three parameters for the notch filter frequency, notch filter Q value, and notch filter depth. This section describes the notch filter Q value and notch filter depth.

- Notch filter Q Value

The setting of the notch filter Q value determines the width of the frequencies that are filtered for the notch filter frequency. The width of the notch changes with the notch filter Q value. The larger the notch filter Q value is, the steeper the notch is and the narrower the width of frequencies that are filtered is.

The notch filter frequency characteristics for different notch filter Q values are shown below.

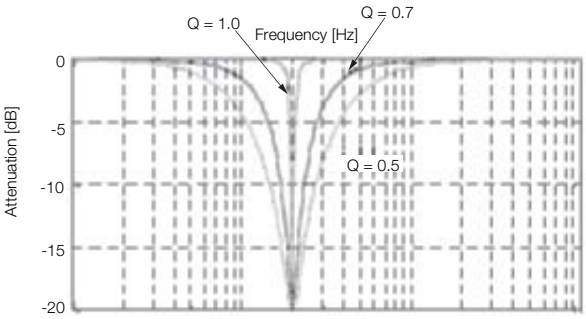

Note: The above notch filter frequency characteristics are based on calculated values and may be different from actual characteristics.

- Notch Filter Depth

The setting of the notch filter depth determines the depth of the frequencies that are filtered for the notch filter frequency. The depth of the notch changes with the notch filter depth. The smaller the notch filter depth is, the deeper the notch is, increasing the effect of vibration suppression. However, if the value is too small, vibration can actually increase.

The notch filter is disabled if the notch filter depth, d, is set to 1.0 (i.e., if Pn419 is set to 1,000).

The notch filter frequency characteristics for different notch filter depths are shown below.

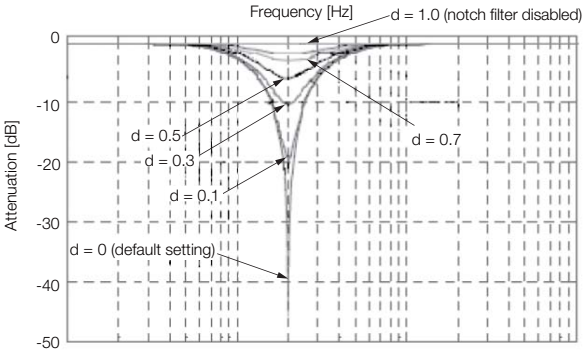

Note: The above notch filter frequency characteristics are based on calculated values and may be different from actual characteristics.

You can enable or disable the notch filter with Pn408 and Pn416.

Parameter		Meaning	When Enabled	Classification
Pn408	n.□□□0 (default setting)	Disable first stage notch filter.	Immediately	Setup
	n.□□□1	Enable first stage notch filter.		
	n.□0□□ (default setting)	Disable second stage notch filter.		
	n.□1□□	Enable second stage notch filter.		
Pn416	n.□□□0 (default setting)	Disable third stage notch filter.		
	n.□□□1	Enable third stage notch filter.		
	n.□□0□ (default setting)	Disable fourth stage notch filter.		
	n.□□1□	Enable fourth stage notch filter.		
	n.□0□□ (default setting)	Disable fifth stage notch filter.		
	n.□1□□	Enable fifth stage notch filter.		

Set the machine vibration frequencies in the notch filter parameters.

Pn409	First Stage Notch Filter Frequency			Speed Position Torque	
	Setting Range	Setting Unit	Default Setting	When Enabled	Classification
	50 to 5,000	1 Hz	5,000	Immediately	Tuning
Pn40A	First Stage Notch Filter Q Value			Speed Position Torque	
	Setting Range	Setting Unit	Default Setting	When Enabled	Classification
	50 to 1,000	0.01	70	Immediately	Tuning
Pn40B	First Stage Notch Filter Depth			Speed Position Torque	
	Setting Range	Setting Unit	Default Setting	When Enabled	Classification
	0 to 1,000	0.001	0	Immediately	Tuning
Pn40C	Second Stage Notch Filter Frequency			Speed Position Torque	
	Setting Range	Setting Unit	Default Setting	When Enabled	Classification
	50 to 5,000	1 Hz	5,000	Immediately	Tuning
Pn40D	Second Stage Notch Filter Q Value			Speed Position Torque	
	Setting Range	Setting Unit	Default Setting	When Enabled	Classification
	50 to 1,000	0.01	70	Immediately	Tuning
Pn40E	Second Stage Notch Filter Depth			Speed Position Torque	
	Setting Range	Setting Unit	Default Setting	When Enabled	Classification
	0 to 1,000	0.001	0	Immediately	Tuning
Pn417	Third Stage Notch Filter Frequency			Speed Position Torque	
	Setting Range	Setting Unit	Default Setting	When Enabled	Classification
	50 to 5,000	1 Hz	5,000	Immediately	Tuning
Pn418	Third Stage Notch Filter Q Value			Speed Position Torque	
	Setting Range	Setting Unit	Default Setting	When Enabled	Classification
	50 to 1,000	0.01	70	Immediately	Tuning
Pn419	Third Stage Notch Filter Depth			Speed Position Torque	
	Setting Range	Setting Unit	Default Setting	When Enabled	Classification
	0 to 1,000	0.001	0	Immediately	Tuning
Pn41A	Fourth Stage Notch Filter Frequency			Speed Position Torque	
	Setting Range	Setting Unit	Default Setting	When Enabled	Classification
	50 to 5,000	1 Hz	5,000	Immediately	Tuning
Pn41B	Fourth Stage Notch Filter Q Value			Speed Position Torque	
	Setting Range	Setting Unit	Default Setting	When Enabled	Classification
	50 to 1,000	0.01	70	Immediately	Tuning
Pn41C	Fourth Stage Notch Filter Depth			Speed Position Torque	
	Setting Range	Setting Unit	Default Setting	When Enabled	Classification
	0 to 1,000	0.001	0	Immediately	Tuning
Pn41D	Fifth Stage Notch Filter Frequency			Speed Position Torque	
	Setting Range	Setting Unit	Default Setting	When Enabled	Classification
	50 to 5,000	1 Hz	5,000	Immediately	Tuning
Pn41E	Fifth Stage Notch Filter Q Value			Speed Position Torque	
	Setting Range	Setting Unit	Default Setting	When Enabled	Classification
	50 to 1,000	0.01	70	Immediately	Tuning
Pn41F	Fifth Stage Notch Filter Depth			Speed Position Torque	
	Setting Range	Setting Unit	Default Setting	When Enabled	Classification
	0 to 1,000	0.001	0	Immediately	Tuning

Important

- Do not set notch filter frequencies (Pn409, Pn40C, Pn417, Pn41A, and Pn41D) that are close to the speed loop's response frequency. Set a frequency that is at least four times the speed loop gain (Pn100). (However, Pn103 (Moment of Inertia Ratio) must be set correctly. If the setting is not correct, vibration may occur and the machine may be damaged.
- Change the notch filter frequencies (Pn409, Pn40C, Pn417, Pn41A, and Pn41D) only while the Servomotor is stopped. Vibration may occur if a notch filter frequency is changed during operation.

Guidelines for Manually Tuning Servo Gains

When you manually adjust the parameters, make sure that you completely understand the information in the product manual and use the following conditional expressions as guidelines. The appropriate values of the parameter settings are influenced by the machine specifications, so they cannot be determined universally. When you adjust the parameters, actually operate the machine and use the SigmaWin+ or analog monitor to monitor operating conditions. Even if the status is stable while the Servomotor is stopped, an unstable condition may occur when an operation reference is input. Therefore, input operation references and adjust the servo gains as you operate the Servomotor.

Stable gain: Settings that provide a good balance between parameters.

However, if the load moment of inertia is large and the machine system contains elements prone to vibration, you must sometimes use a setting that is somewhat higher to prevent the machine from vibrating.

Critical gain: Settings for which the parameters affect each other

Depending on the machine conditions, overshooting and vibration may occur and operation may not be stable. If the critical gain condition expressions are not met, operation will become more unstable, and there is a risk of abnormal motor shaft vibration and round-trip operation with a large amplitude. Always stay within the critical gain conditions.

If you use the torque reference filter, second torque reference filter, and notch filters together, the interference between the filters and the speed loop gain will be superimposed. Allow leeway in the adjustments.

Important

The following adjusted value guidelines require that the setting of Pn103 (Moment of Inertia Ratio) is correctly set for the actual machine.

◆ When Pn10B = n.□□0□ (PI Control)

Guidelines are given below for gain settings 1.

The same guidelines apply to gain settings 2 (Pn104, Pn105, Pn106, and Pn412).

- Speed Loop Gain (Pn100 [Hz]) and Position Loop Gain (Pn102 [/s])
  Stable gain: Pn102 [/s] ≤ 2π × Pn100/4 [Hz]
  Critical gain: Pn102 [/s] < 2π × Pn100 [Hz]

- Speed Loop Gain (Pn100 [Hz]) and Speed Loop Integral Time Constant (Pn101 [ms])
  Stable gain: Pn101 [ms] ≥ 4,000/(2π × Pn100 [Hz])
  Critical gain: Pn101 [ms] > 1,000/(2π × Pn100 [Hz])

- Speed Loop Gain (Pn100 [Hz]) and First Stage First Torque Reference Filter Time Constant (Pn401 [ms])
  Stable gain: Pn401 [ms] ≤ 1,000/(2π × Pn100 [Hz] × 4)
  Critical gain: Pn401 [ms] < 1,000/(2π × Pn100 [Hz] × 1)

- Speed Loop Gain (Pn100 [Hz]) and Second Stage Second Torque Reference Filter Frequency (Pn40F [Hz])
  Critical gain: Pn40F [Hz] > 4 × Pn100 [Hz]
  Note: Set the second stage second torque reference filter Q value (Pn410) to 0.70.

- Speed Loop Gain (Pn100 [Hz]) and First Stage Notch Filter Frequency (Pn409 [Hz]) (or Second Stage Notch Filter Frequency (Pn40C [Hz]))
  Critical gain: Pn409 [Hz] > 4 × Pn100 [Hz]

- Speed Loop Gain (Pn100 [Hz]) and Speed Feedback Filter Time Constant (Pn308 [ms])
  Stable gain: Pn308 [ms] ≤ 1,000/(2π × Pn100 [Hz] × 4)
  Critical gain: Pn308 [ms] < 1,000/(2π × Pn100 [Hz] × 1)

◆ When Pn10B = n.□□1□ (I-P Control)

Guidelines are given below for gain settings 1.

The same guidelines apply to gain settings 2 (Pn104, Pn105, Pn106, and Pn412).

For I-P control, the relationships between the speed loop integral time constant, speed loop gain, and position loop gain are different from the relationships for PI control. The relationship between other servo gains is the same as for PI control.

- Speed Loop Gain (Pn100 [Hz]) and Speed Loop Integral Time Constant (Pn101 [ms])
  Stable gain: Pn100 [Hz] ≥ 320/Pn101 [ms]
- Position Loop Gain (Pn102 [/s]) and Speed Loop Integral Time Constant (Pn101 [ms])
  Stable gain: Pn102 [/s] ≤ 320/Pn101 [ms]

Information

Selecting the Speed Loop Control Method (PI Control or I-P Control)
Usually, I-P control is effective for high-speed positioning and high-speed, high-precision processing applications. With I-P control, you can use a lower position loop gain than for PI control to reduce the positioning time and reduce arc radius reduction. However, if you can use mode switching to change to proportional control to achieve the desired application, then using PI control would be the normal choice.

◆ Decimal Points in Parameter Settings

For the SGD7S SERVOPACKs, decimal places are given for the settings of parameters on the Digital Operator, Panel Operator, and in the manual. For example with Pn100 (Speed Loop Gain), Pn100 = 40.0 is used to indicate a setting of 40.0 Hz. In the following adjusted value guidelines, the decimal places are also given.

Example

- Speed Loop Gain (Pn100 [Hz]) and Speed Loop Integral Time Constant (Pn101 [ms])
  Stable gain: Pn101 [ms] ≥ 4,000/(2π × Pn100 [Hz]), therefore
  If Pn100 = 40.0 [Hz], then Pn101 = 4,000/(2π × 40.0) ≈ 15.92 [ms].

Model Following Control

You can use model following control to improve response characteristic and shorten positioning time. You can use model following control only with position control.

Normally, the parameters that are used for model following control are automatically set along with the servo gains by executing autotuning or custom tuning. However, you must adjust them manually in the following cases.

- When the tuning results for autotuning or custom tuning are not acceptable
- When you want to increase the response characteristic higher than that achieved by the tuning results for autotuning or custom tuning
- When you want to determine the servo gains and model following control parameters yourself

The block diagram for model following control is provided below.

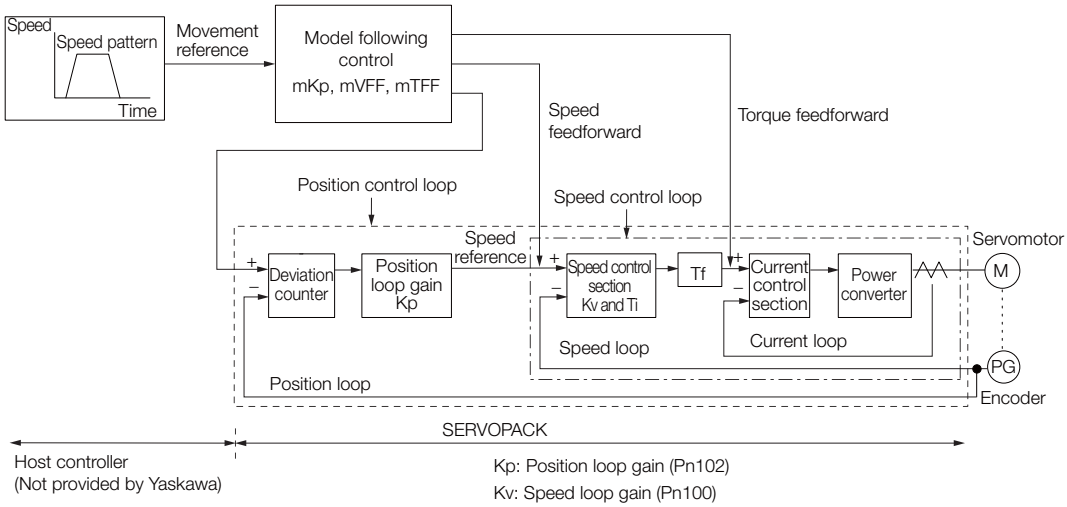

Kp: Position loop gain (Pn102)
Kv: Speed loop gain (Pn100)
Ti: Speed loop integral time constant (Pn101)
Tf: First stage first torque reference filter time constant (Pn401)
mKp: Model following control gain (Pn141)
mTFF: Model following control bias in the forward direction (Pn143)
Model following control bias in the reverse direction (Pn144)
mVFF: Model following control speed feedforward compensation (Pn147)

◆ Manual Tuning Procedure

Use the following tuning procedure for using model following control.

Step	Description
1	Friction compensation must also be used. Set the friction compensation parameters. Refer to the following section for the setting procedure. ☞ *8.12.2 Friction Compensation* on page 8-70
2	Adjust the servo gains. Refer to the following section for an example procedure. ☞ *Tuning Procedure Example (for Position Control or Speed Control)* on page 8-82 Note: 1. Set the moment of inertia ratio (Pn103) as accurately as possible. 2. Refer to the guidelines for manually tuning the servo gains and set a stable gain for the position loop gain (Pn102). ☞ *Guidelines for Manually Tuning Servo Gains* on page 8-87
3	Increase the model following control gain (Pn141) as much as possible within the range in which overshooting and vibration do not occur.
4	If overshooting occurs or if the response is different for forward and reverse operation, fine-tune model following control with the following settings: model following control bias in the forward direction (Pn143), model following control bias in the reverse direction (Pn144), and model following control speed feedforward compensation (Pn147).

◆ Related Parameters

Next we will describe the following parameters that are used for model following control.

- Pn140 (Model Following Control-Related Selections)
- Pn141 (Model Following Control Gain)
- Pn143 (Model Following Control Bias in the Forward Direction)
- Pn144 (Model Following Control Bias in the Reverse Direction)
- Pn147 (Model Following Control Speed Feedforward Compensation)

■ Model Following Control-Related Selections

Set Pn140 = n.□□□X to specify whether to use model following control.

If you use model following control with vibration suppression, set Pn140 to n.□□1□ or Pn140 = n.□□2□. When you also perform vibration suppression, adjust vibration suppression with custom tuning in advance.

Note: If you use vibration suppression (Pn140 = n.□□1□ or Pn140 = n.□□2□), always set Pn140 to n.□□□1 (Use model following control).

Parameter		Function	When Enabled	Classification
Pn140	n.□□□0 (default setting)	Do not use model following control.	Immediately	Tuning
	n.□□□1	Use model following control.		
	n.□□0□ (default setting)	Do not perform vibration suppression.		
	n.□□1□	Perform vibration suppression for a specific frequency.		
	n.□□2□	Perform vibration suppression for two specific frequencies.		

■ Model Following Control Gain

The model following control gain determines the response characteristic of the servo system. If you increase the setting of the model following control gain, the response characteristic will improve and the positioning time will be shortened. The response characteristic of the servo system is determined by this parameter, and not by Pn102 (Position Loop Gain).

Pn141	Model Following Control Gain			Position	
	Setting Range	Setting Unit	Default Setting	When Enabled	Classification
	10 to 20,000	0.1/s	500	Immediately	Tuning

Information

For machines for which a high model following control gain cannot be set, the size of the position deviation in model following control will be determined by the setting of the model following control gain. For a machine with low rigidity, in which a high model following control gain cannot be set, position deviation overflow alarms may occur during high-speed operation. If that is the case, you can increase the setting of the following parameter to increase the level for alarm detection.
Use the following conditional expression for reference in determining the setting.

$$\text{Pn 520} \geq \frac{\text{Maximum feed speed [reference units/s]}}{\text{Pn 141/10 [1/s]}} \times 2.0$$

Pn520	Position Deviation Overflow Alarm Level			Position	
	Setting Range	Setting Unit	Default Setting	When Enabled	Classification
	1 to 1,073,741,823	1 reference unit	5,242,880	Immediately	Setup

■ Model Following Control Bias in the Forward Direction and Model Following Control Bias in the Reverse Direction

If the response is different for forward and reverse operation, use the following parameters for fine-tuning.

If you decrease the settings, the response characteristic will be lowered but overshooting will be less likely to occur.

Pn143	Model Following Control Bias in the Forward Direction			Position	
	Setting Range	Setting Unit	Default Setting	When Enabled	Classification
	0 to 10,000	0.1%	1,000	Immediately	Tuning
Pn144	Model Following Control Bias in the Reverse Direction			Position	
	Setting Range	Setting Unit	Default Setting	When Enabled	Classification
	0 to 10,000	0.1%	1,000	Immediately	Tuning

■ Model Following Control Speed Feedforward Compensation

If overshooting occurs even after you adjust the model following control gain, model following control bias in the forward direction, and model following control bias in the reverse direction, you may be able to improve performance by setting the following parameter.

If you decrease the settings, the response characteristic will be lowered but overshooting will be less likely to occur.

Pn147	Model Following Control Speed Feedforward Compensation			Position	
	Setting Range	Setting Unit	Default Setting	When Enabled	Classification
	0 to 10,000	0.1%	1,000	Immediately	Tuning

■ Model Following Control Type Selection

When you enable model following control, you can select the model following control type. Normally, set Pn14F to n.□□□1 (Use model following control type 2) (default setting). If compatibility with previous models is required, set Pn14F to n.□□□0 (Use model following control type 1).

Parameter		Meaning	When Enabled	Classification
Pn14F	n.□□□0	Use model following control type 1.	After restart	Tuning
	n.□□□1 (default setting)	Use model following control type 2.		

8.13.2 Compatible Adjustment Functions

The compatible adjustment functions are used together with manual tuning. You can use these functions to improve adjustment results. These functions allow you to use the same functions as for Σ-III-Series SERVOPACKs to adjust Σ-7-Series SERVOPACKs.

Feedforward

The feedforward function applies feedforward compensation to position control to shorten the positioning time.

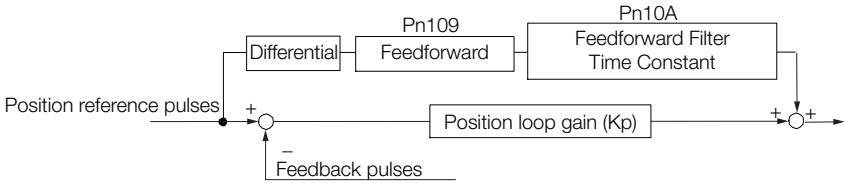

Pn109	Feedforward			Position	
	Setting Range	Setting Unit	Default Setting	When Enabled	Classification
	0 to 100	1%	0	Immediately	Tuning
Pn10A	Feedforward Filter Time Constant			Position	
	Setting Range	Setting Unit	Default Setting	When Enabled	Classification
	0 to 6,400	0.01 ms	0	Immediately	Tuning

Note: If you set the feedforward value too high, the machine may vibrate. As a guideline, use a setting of 80% or less.

Mode Switching (Changing between Proportional and PI Control)

You can use mode switching to automatically change between proportional control and PI control.
Overshooting caused by acceleration and deceleration can be suppressed and the settling time can be reduced by setting the switching condition and switching levels.

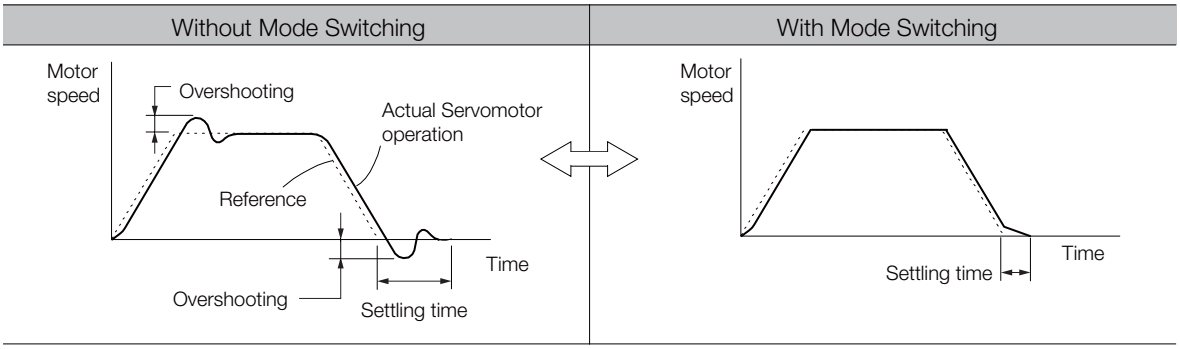

◆ Related Parameters

Select the switching condition for mode switching with Pn10B = n.□□□X.

Parameter		Mode Switching Selection	Parameter That Sets the Level		When Enabled	Classification
			Rotary Servomotor	Linear Servomotor		
Pn10B	n.□□□0 (default setting)	Use the internal torque reference as the condition.	Pn10C		Immediately	Setup
	n.□□□1	Use the speed reference as the condition.	Pn10D	Pn181		
	n.□□□2	Use the acceleration reference as the condition.	Pn10E	Pn182		
	n.□□□3	Use the position deviation as the condition.	Pn10F			
	n.□□□4	Do not use mode switching.	–			

■ Parameters That Set the Switching Levels

• Rotary Servomotors

Pn10C	Mode Switching Level for Torque Reference			Speed	Position
	Setting Range	Setting Unit	Default Setting	When Enabled	Classification
	0 to 800	1%	200	Immediately	Tuning
Pn10D	Mode Switching Level for Speed Reference			Speed	Position
	Setting Range	Setting Unit	Default Setting	When Enabled	Classification
	0 to 10,000	1 min^{-1}	0	Immediately	Tuning
Pn10E	Mode Switching Level for Acceleration			Speed	Position
	Setting Range	Setting Unit	Default Setting	When Enabled	Classification
	0 to 30,000	1 min^{-1}/s	0	Immediately	Tuning
Pn10F	Mode Switching Level for Position Deviation				Position
	Setting Range	Setting Unit	Default Setting	When Enabled	Classification
	0 to 10,000	1 reference unit	0	Immediately	Tuning

- Linear Servomotors

Pn10C	Mode Switching Level for Force Reference			Speed	Position
	Setting Range	Setting Unit	Default Setting	When Enabled	Classification
	0 to 800	1%	200	Immediately	Tuning
Pn181	Mode Switching Level for Speed Reference			Speed	Position
	Setting Range	Setting Unit	Default Setting	When Enabled	Classification
	0 to 10,000	1 mm/s	0	Immediately	Tuning
Pn182	Mode Switching Level for Acceleration			Speed	Position
	Setting Range	Setting Unit	Default Setting	When Enabled	Classification
	0 to 30,000	1 mm/s^2	0	Immediately	Tuning
Pn10F	Mode Switching Level for Position Deviation				Position
	Setting Range	Setting Unit	Default Setting	When Enabled	Classification
	0 to 10,000	1 reference unit	0	Immediately	Tuning

■ Using the Internal Torque Reference as the Mode Switching Condition (Default Setting)

When the Internal torque reference equals or exceeds the torque set for the mode switching level for torque reference (Pn10C), the speed loop is changed to P control.

The default setting for the torque reference level is 200%.

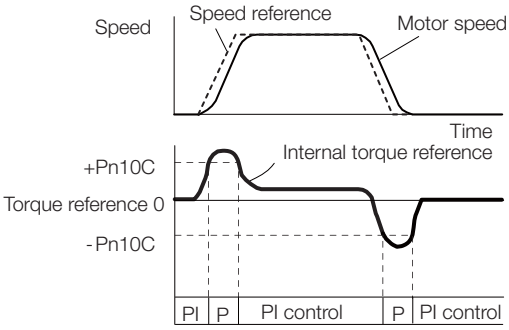

■ Using the Speed Reference as the Mode Switching Condition

- Rotary Servomotors
  When the speed reference equals or exceeds the speed set for the mode switching level for a speed reference (Pn10D), the speed loop is changed to P control.

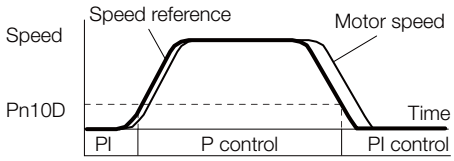

- Linear Servomotors
  When the speed reference equals or exceeds the speed set for the mode switching level for a speed reference (Pn181), the speed loop is changed to P control.

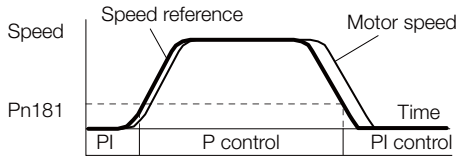

■ Using the Acceleration as the Mode Switching Condition

- Rotary Servomotors
  When the speed reference equals or exceeds the acceleration rate set for the mode switching level for acceleration (Pn10E), the speed loop is changed to P control.

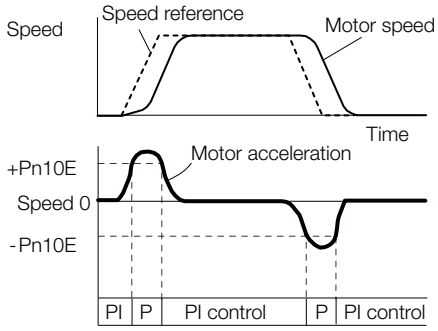

- Linear Servomotors
  When the speed reference equals or exceeds the acceleration rate set for the mode switching level for acceleration (Pn182), the speed loop is changed to P control.

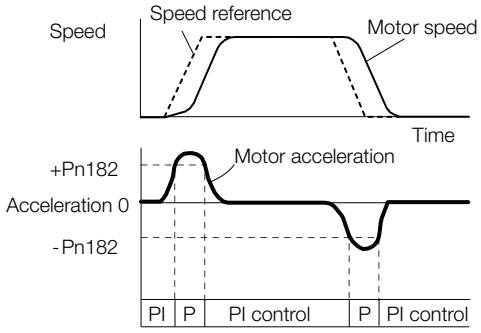

■ Using the Position Deviation as the Mode Switching Condition

When the position deviation equals or exceeds the value set for the mode switching level for position deviation (Pn10F), the speed loop is changed to P control.

This setting is enabled only for position control.

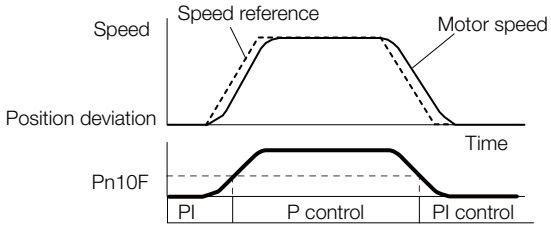

Position Integral

The position integral is the integral function of the position loop. It is used for the electronic cams and electronic shafts when using the SERVOPACK with a Yaskawa MP3000-Series Machine Controller.

Pn11F	Position Integral Time Constant				Position
	Setting Range	Setting Unit	Default Setting	When Enabled	Classification
	0 to 50,000	0.1 ms	0	Immediately	Tuning

8.14 Diagnostic Tools

8.14.1 Mechanical Analysis

Overview

You can connect the SERVOPACK to a computer to measure the frequency characteristics of the machine. This allows you to measure the frequency characteristics of the machine without using a measuring instrument.

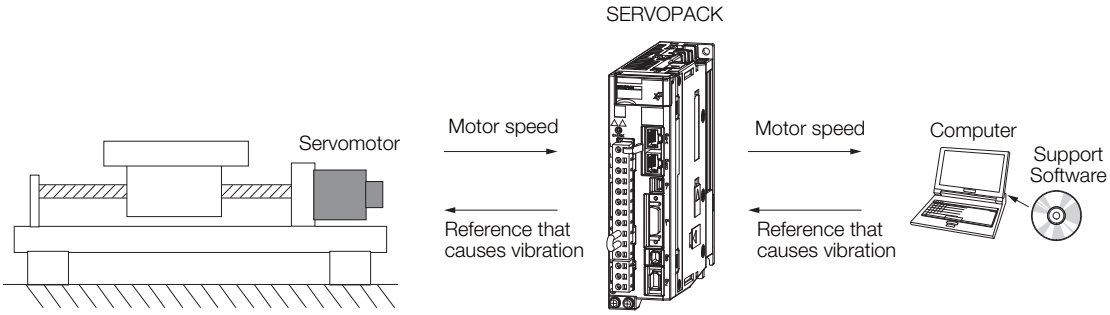

The Servomotor is used to cause machine vibration and then the speed frequency characteristics for the motor torque are measured. The measured frequency characteristics can be used to determine the machine resonance.

You determine the machine resonance for use in servo tuning and as reference for considering changes to the machine. The performance of the servo cannot be completely utilized depending on the rigidity of the machine. You may need to consider making changes to the machine. The information can also be used as reference for servo tuning to help you adjust parameters, such as the servo rigidity and torque filter time constant.

You can also use the information to set parameters, such as the notch filters.

⚠ WARNING

- Mechanical analysis requires operating the Servomotor and therefore presents hazards. Before you execute mechanical analysis, check the information provided in the SigmaWin+ operating manual.

Frequency Characteristics

The Servomotor is used to cause the machine to vibrate and the frequency characteristics from the torque to the motor speed are measured to determine the machine characteristics. For a normal machine, the resonance frequencies are clear when the frequency characteristics are plotted on graphs with the gain and phase (Bode plots). The Bode plots show the size (gain) of the response of the machine to which the torque is applied, and the phase delay (phase) in the response for each frequency. Also, the machine resonance frequency can be determined from the maximum frequency of the valleys (anti-resonance) and peaks (resonance) of the gain and the phase delay.

For a Servomotor without a load or for a rigid mechanism, the gain and phase change gradually in the Bode plots.

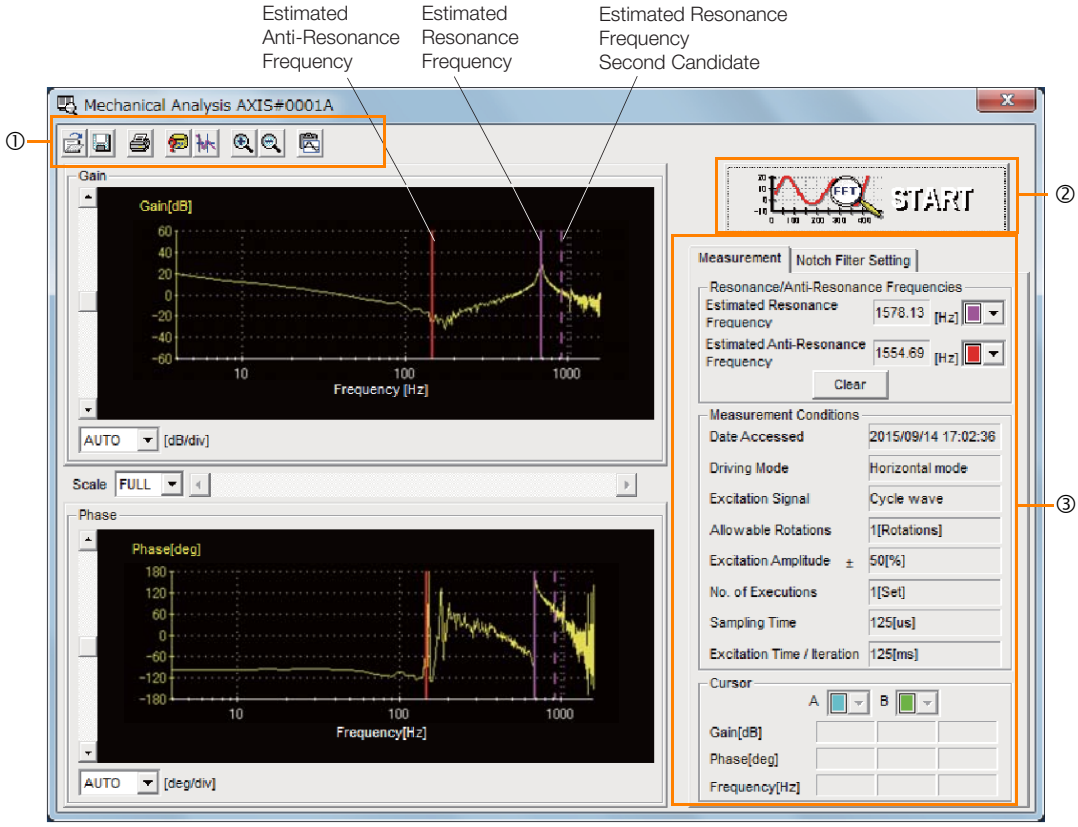

① Toolbar

② **START** Button

Click the **START** Button to start analysis.

③ **Measurement** and **Notch Filter Setting** Tab Pages

Measurement Tab Page: Displays detailed information on the results of analysis.

Notch Filter Setting Tab Page: Displays the notch filter frequencies. You can set these values in the parameters.

8.14.2 Easy FFT

The machine is made to vibrate and a resonance frequency is detected from the generated vibration to set notch filters according to the detected resonance frequencies. This is used to eliminate high-frequency vibration and noise.

During execution of Easy FFT, a frequency waveform reference is sent from the SERVOPACK to the Servomotor to automatically cause the shaft to rotate multiple times within 1/4th of a rotation, thus causing the machine to vibrate.

Execute Easy FFT after the servo is turned OFF if operation of the SERVOPACK results in high-frequency noise and vibration.

⚠ WARNING

- Never touch the Servomotor or machine during execution of Easy FFT. Doing so may result in injury.

⚠ CAUTION

- Use Easy FFT when the servo gain is low, such as in the initial stage of servo tuning. If you execute Easy FFT after you increase the gain, the machine may vibrate depending on the machine characteristics or gain balance.

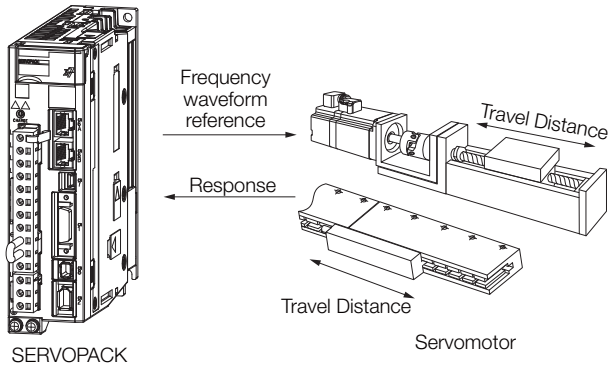

Easy FFT is built into the SERVOPACK for compatibility with previous products. Normally use autotuning without a host reference for tuning.

Preparations

Always check the following before you execute Easy FFT.

- The parameters must not be write prohibited.
- The main circuit power supply must be ON.
- The test without a motor function must be disabled (Pn00C = n.□□□0).
- There must be no alarms.
- There must be no hard wire base block (HWBB).
- The servo must be OFF.
- There must be no overtravel.
- An external reference must not be input.

Operating Procedure

Use the following procedure for Easy FFT.

1. Click the Servo Drive Button in the workspace of the Main Window of the SigmaWin+.

2. Select **Easy FFT** in the Menu Dialog Box.
   The Easy FFT Dialog Box will be displayed.
   Click the **Cancel** Button to cancel Easy FFT. You will return to the main window.

3. Click the **OK** Button.

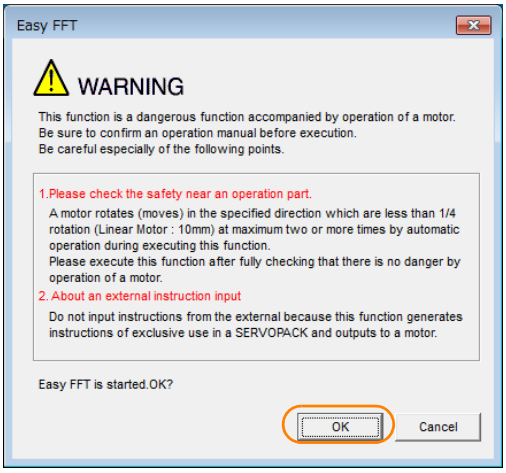

4. Click the **Servo ON** Button.

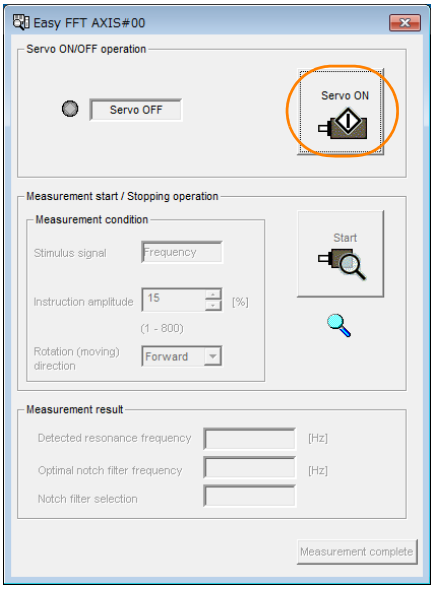

5. Select the instruction (reference) amplitude and the rotation direction in the **Measurement condition** Area, and then click the **Start** Button.
The Servomotor shaft will rotate and measurements will start.

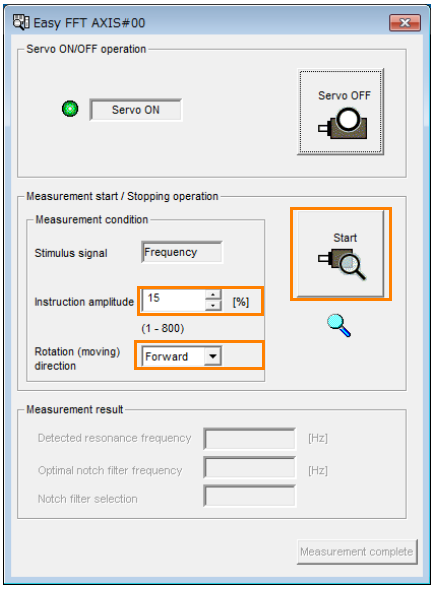

When measurements have been completed, the measurement results will be displayed.

6. Check the results in the **Measurement result** Area and then click the **Measurement complete** Button.

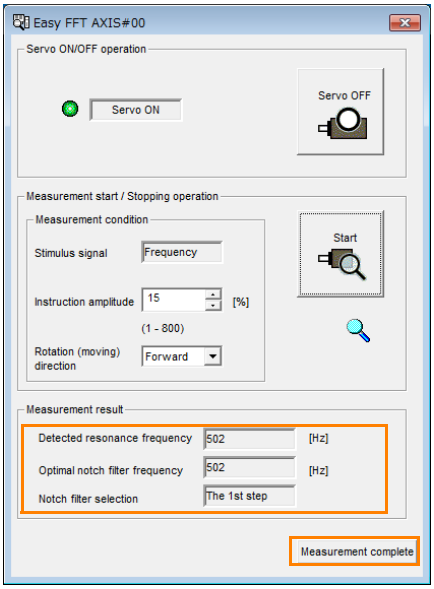

7. Click the **Result Writing** Button if you want to set the measurement results in the parameters.

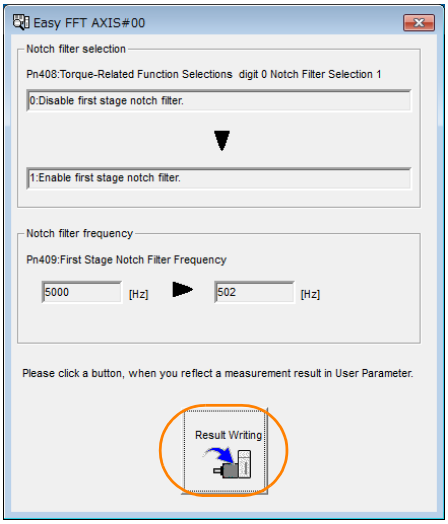

This concludes the procedure to set up Easy FFT.

Related Parameters

The following parameters are automatically adjusted or used as reference when you execute Easy FFT.

Do not change the settings of these parameters during execution of Easy FFT.

Parameter	Name	Automatic Changes
Pn408	Torque-Related Function Selections	Yes
Pn409	First Stage Notch Filter Frequency	Yes
Pn40A	First Stage Notch Filter Q Value	No
Pn40C	Second Stage Notch Filter Frequency	Yes
Pn40D	Second Stage Notch Filter Q Value	No
Pn456	Sweep Torque Reference Amplitude	No

Yes: The parameter is automatically set.

No: The parameter is not automatically set, but the setting is read during execution.

Monitoring

9

This chapter provides information on monitoring SERVOPACK product information and SERVOPACK status.

9.1 Monitoring Product Information 9-2

9.1.1 Items That You Can Monitor 9-2
9.1.2 Operating Procedures 9-2

9.2 Monitoring SERVOPACK Status 9-3

9.2.1 Servo Drive Status 9-3
9.2.2 Monitoring Operation, Status, and I/O 9-3
9.2.3 I/O Signals Status Monitor 9-5

9.3 Monitoring Machine Operation Status and Signal Waveforms . . 9-7

9.3.1 Items That You Can Monitor 9-7
9.3.2 Using the SigmaWin+ 9-8
9.3.3 Using the Analog Monitors 9-9

9.4 Monitoring Product Life 9-15

9.4.1 Items That You Can Monitor 9-15
9.4.2 Operating Procedure 9-16
9.4.3 Preventative Maintenance 9-17

9.5 Alarm Tracing 9-18

9.5.1 Data for Which Alarm Tracing Is Performed 9-18
9.5.2 Applicable Tools 9-18

9.1 Monitoring Product Information

9.1.1 Items That You Can Monitor

The items that you can monitor in the SigmaWin+ Product Information Window are listed below.

Monitor Items	
Information on SERVOPACKs	• Model/Type • Serial Number • Manufacturing Date • Software version (SW Ver.) • Remarks
Information on Servomotors	• Model/Type • Serial Number • Manufacturing Date • Remarks
Information on Encoders	• Model/Type • Serial Number • Manufacturing Date • Software version (SW Ver.) • Remarks
Information on Option Modules	• Model/Type • Serial Number • Manufacturing Date • Software version (SW Ver.) • Remarks

9.1.2 Operating Procedures

Use the following procedure to display the product information monitor dialog box.

- Select ***Read Product Information*** in the Menu Dialog Box of the SigmaWin+. The Read Product information Window will be displayed.

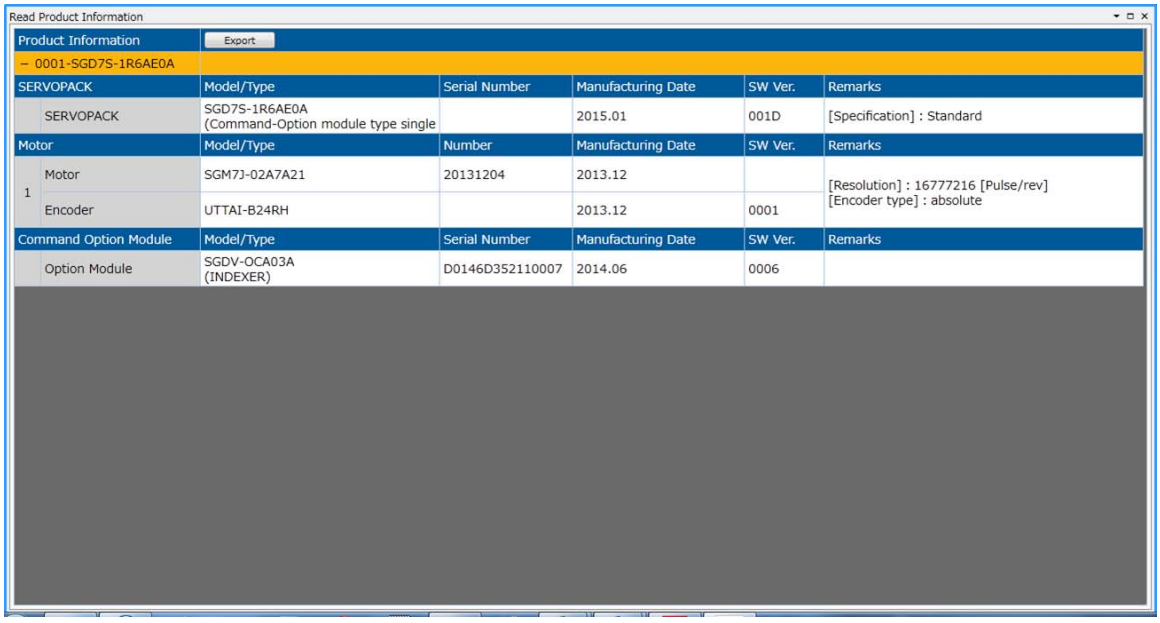

Information

With the Digital Operator, you can use Fn011, Fn012, and Fn01E to monitor this information. Refer to the following manual for the differences in the monitor items compared with the SigmaWin+.

Σ-7-Series Digital Operator Operating Manual (Manual No.: SIEP S800001 33)

9.2 Monitoring SERVOPACK Status

9.2.1 Servo Drive Status

Use the following procedure to display the Servo Drive status.

- Start the SigmaWin+. The Servo Drive status will be automatically displayed when you go online with a SERVOPACK.

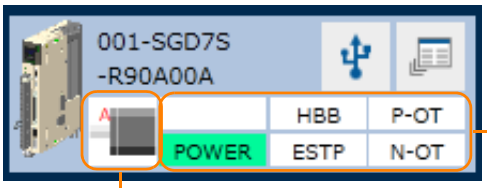

The Servo Drive status is displayed.

The Servomotor type is displayed.

9.2.2 Monitoring Operation, Status, and I/O

Items That You Can Monitor

The items that you can monitor on the Operation Pane, Status Pane, and I/O Pane are listed below.

- Operation Pane

Monitor Items	
• Motor Speed • Speed Reference • Internal Torque Reference • Angle of Rotation 1 (Number of encoder pulses from origin within one encoder rotation) • Angle of Rotation 2 (angle from origin within one encoder rotation) • Input Reference Pulse Speed • Deviation Counter (Position Deviation) • Cumulative Load • Regenerative Load • Power Consumption • Consumed Power • Cumulative Power Consumption • DB Resistor Consumption Power • Absolute Encoder Multiturn Data • Absolute Encoder Position within One Rotation • Absolute Encoder (Lower)	• Absolute Encoder (Upper) • Input Reference Pulse Counter • Feedback Pulse Counter • Fully Closed Feedback Pulse Counter • Total Operating Time • Maximum Value of Amplitude of Estimated Vibration* • Estimated External Disturbance Torque* • Maximum Value of Estimated External Disturbance Torque* • Minimum Value of Estimated External Disturbance Torque* • Number of Serial Encoder Communications Errors* • Settling Time* • Amount of Overshoot* • Residual Vibration Frequency* • Estimated Vibration* • Maximum Value of Accumulated Load Ratio* • Number of MECHATROLINK Communications Errors* • Margin until Overload* • Temperature Margin until Servomotor Overheats*

* These items can be monitored using SERVOPACKs with software version 002C or higher.

- Status Pane

Monitor Items	
• Main Circuit • Encoder (PGRDY) • Motor Power (Request) • Motor Power ON • Dynamic Brake (DB) • Rotation (Movement) Direction • Mode Switch • Speed Reference (V-Ref) • Torque Reference (T-Ref)	• Position Reference (PULS) • Position Reference Direction • Surge Current Limiting Resistor Short Relay • Regenerative Transistor • Regenerative Error Detection • AC Power ON • Overcurrent • Origin Not Passed

- I/O Pane

Monitor Items			
Input Signal Status	• P-OT (Forward Drive Prohibit Input Signal) • N-OT (Reverse Drive Prohibit Input Signal) • /P-CL (Forward External Torque Limit Signal) • /N-CL (Reverse External Torque Limit Signal) • /G-SEL (Gain Selection Input Signal) • /P-DET (Polarity Detection Input Signal) • /DEC (Origin Return Deceleration Switch Input Signal) • /EXT1 (External Latch Input 1 Signal) • /EXT2 (External Latch Input 2 Signal) • /EXT3 (External Latch Input 3 Signal) • FSTP (Forced Stop Input Signal)	Output Signal Status	• ALM (Servo Alarm Output Signal) • /COIN (Positioning Completion Output Signal) • /V-CMP (Speed Coincidence Detection Output Signal) • /TGON (Rotation Detection Output Signal) • /S-RDY (Servo Ready Output Signal) • /CLT (Torque Limit Detection Signal) • /VLT (Speed Limit Detection Output Signal) • /BK (Brake Output Signal) • /WARN (Warning Output Signal) • /NEAR (Near Output Signal) • PAO (Encoder Divided Pulse Output Phase A Signal) • PBO (Encoder Divided Pulse Output Phase B Signal) • PCO (Encoder Divided Pulse Output Phase C Signal) • /PM (Preventative Maintenance Output Signal)

Operating Procedure

Use the following procedure to display the Operation Monitor, Status Monitor, and I/O Monitor for the SERVOPACK.

- Select **Monitor** in the SigmaWin+ Menu Dialog Box.
  The Operation Pane, Status Pane, and I/O Pane will be displayed in the Monitor Window.

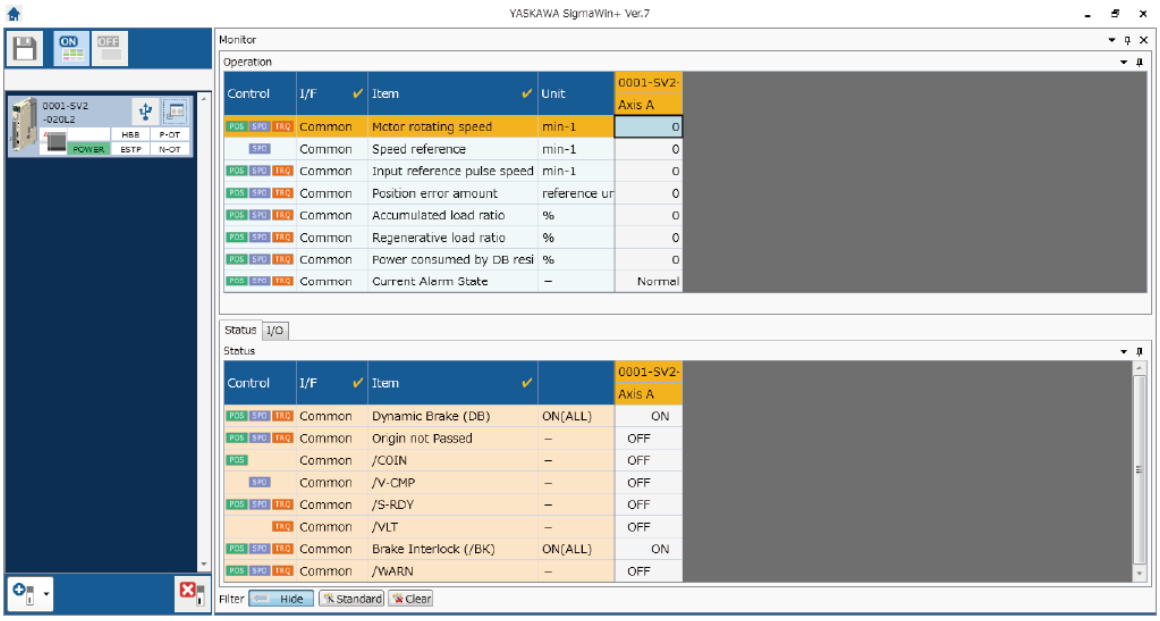

Information

You can flexibly change the contents that are displayed in the Monitor Window. Refer to the following manual for details.

Engineering Tool SigmaWin+ Operation Manual (Manual No.: SIET S800001 34)

9.2.3 I/O Signals Status Monitor

Use the following procedure to check the status of the I/O signals.

1. Click the Servo Drive Button in the workspace of the Main Window of the SigmaWin+.

2. Select **I/O Signal Allocation** in the Menu Dialog Box.
   The I/O Signal Allocation Window will be displayed.

3. Click the **Input Signal** Tab.

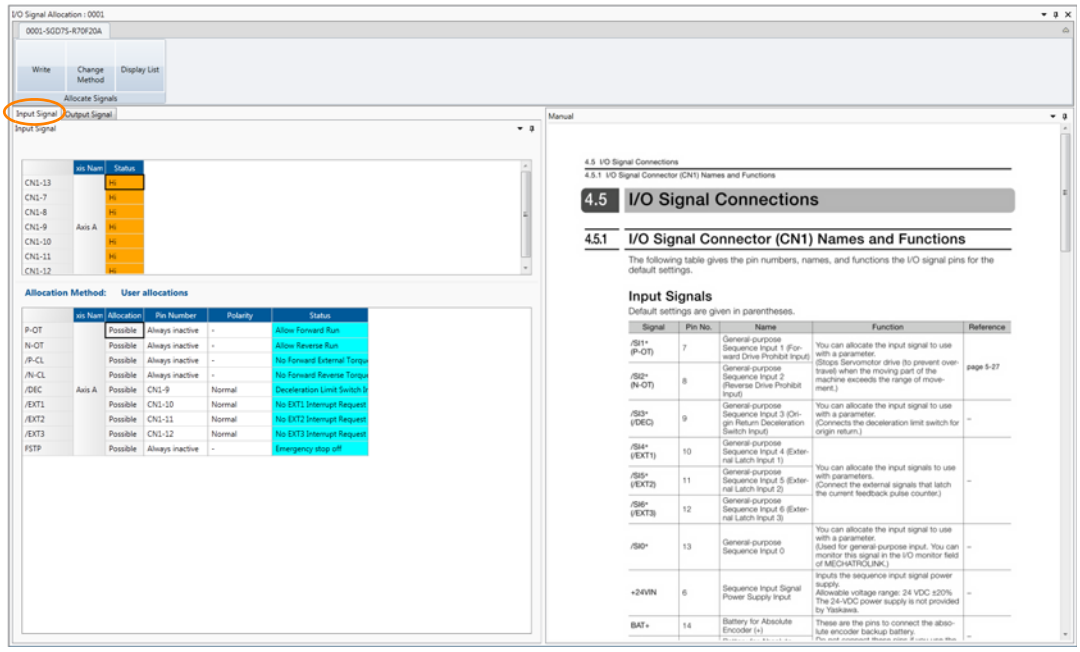

Check the status of the input signals.

4. Click the **Output Signal** Tab.

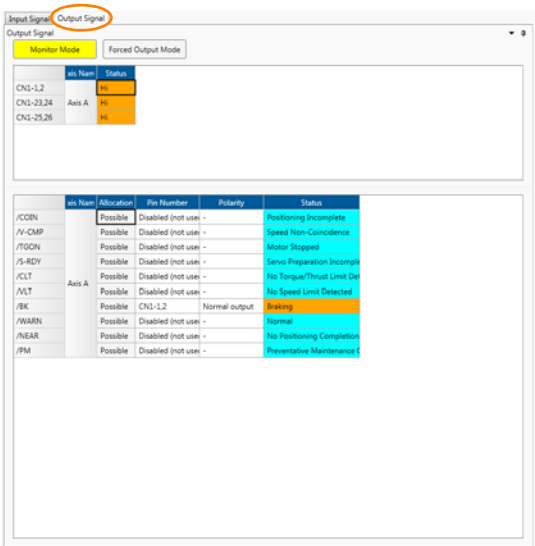

Check the status of the output signals.

Information

You can also use the above window to check wiring.

- Checking Input Signal Wiring
  Change the signal status at the host controller. If the input signal status on the window changes accordingly, then the wiring is correct.
- Checking Output Signal Wiring
  Click the **Force Output Mode** Button. This will force the output signal status to change. If the signal status at the host controller changes accordingly, then the wiring is correct.
  You cannot use the **Force Output Mode** Button while the servo is ON.

For details, refer to the following manual.

AC Servo Drive Engineering Tool SigmaWin+ Operation Manual (Manual No.: SIET S800001 34)

9.3 Monitoring Machine Operation Status and Signal Waveforms

To monitor waveforms, use the SigmaWin+ trace function or a measuring instrument, such as a memory recorder.

9.3.1 Items That You Can Monitor

You can use the SigmaWin+ or a measuring instrument to monitor the shaded items in the following block diagram.

- Rotary Servomotors

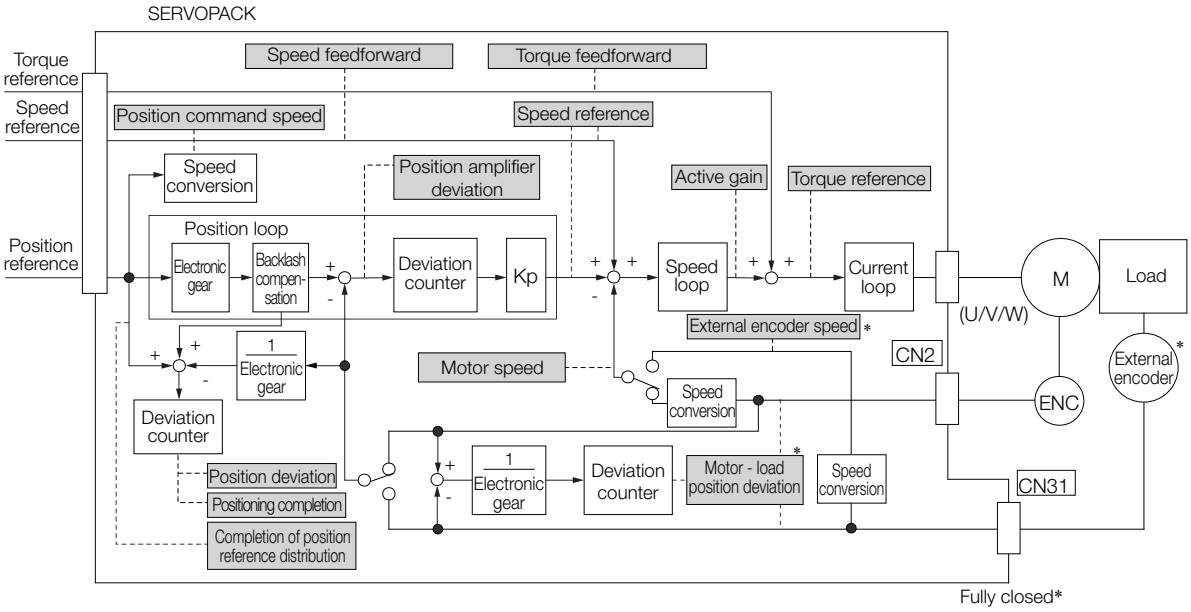

* This speed is available when fully-closed loop control is being used.

- Linear Servomotors

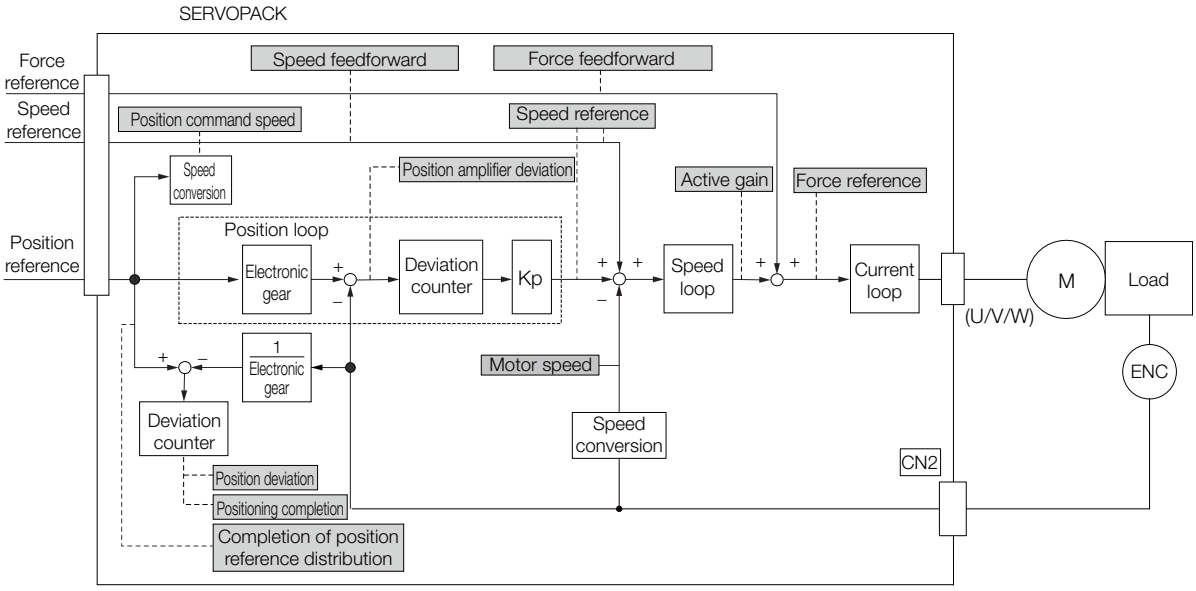

9.3.2 Using the SigmaWin+

This section describes how to trace data and I/O with the SigmaWin+.

Refer to the following manual for detailed operating procedures for the SigmaWin+.

Engineering Tool SigmaWin+ Operation Manual (Manual No.: SIET S800001 34)

Operating Procedure

1. Click the Servo Drive Button in the workspace of the Main Window of the SigmaWin+.

2. Select **Trace** in the Menu Dialog Box.
   The Trace Dialog Box will be displayed.

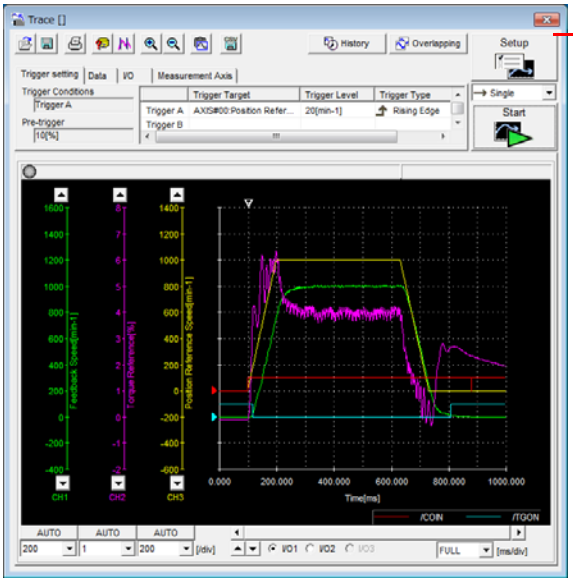

Click this button to display the Trace Setting Dialog Box shown below, and set the data to trace and the trace conditions.

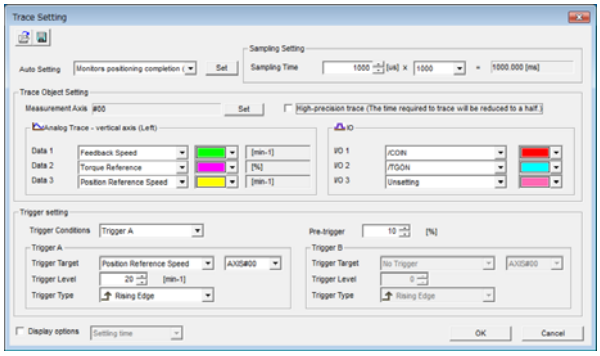

Trace Objects

You can trace the following items.

- Data Tracing

Trace Objects	
• Torque Reference • Feedback Speed • Reference Speed • Position Reference Speed • Position Error (Deviation) • Position Amplifier Error (Deviation) • Motor - Load Position Deviation • Speed Feedforward • Torque Feedforward • Effective (Active) Gain	• Main Circuit DC Voltage • External Encoder Speed • Control Mode • Estimated Vibration • Estimated External Disturbance Torque • Number of Serial Encoder Communications Errors • Number of MECHATROLINK Communications Errors • Temperature Margin Until Servomotor Overheats • Margin Until Overload

- I/O Tracing

Trace Objects			
Input Signals	• P-OT (Forward Drive Prohibit Input Signal) • N-OT (Reverse Drive Prohibit Input Signal) • /P-CL (Forward External Torque/Force Limit Input Signal) • /N-CL (Reverse External Torque/Force Limit Input Signal) • /G-SEL (Gain Selection Input Signal) • /P-DET (Polarity Detection Input Signal) • /DEC (Origin Return Deceleration Switch Input Signal) • /EXT1 (External Latch Input 1 Signal) • /EXT2 (External Latch Input 2 Signal) • /EXT3 (External Latch Input 3 Signal) • FSTP (Forced Stop Input Signal) • /HWBB1 (Hard Wire Base Block Input 1 Signal) • /HWBB2 (Hard Wire Base Block Input 2 Signal)	Output Signals	• ALM (Servo Alarm Output Signal) • /COIN (Positioning Completion Output Signal) • /V-CMP (Speed Coincidence Detection Output Signal) • /TGON (Rotation Detection Output Signal) • /S-RDY (Servo Ready Output Signal) • /CLT (Torque Limit Detection Output Signal) • /VLT (Speed Limit Detection Output Signal) • /BK (Brake Output Signal) • /WARN (Warning Output Signal) • /NEAR (Near Output Signal) • PAO (Encoder Divided Pulse Output Phase A Signal) • PBO (Encoder Divided Pulse Output Phase B Signal) • PCO (Encoder Divided Pulse Output Phase C Signal)
		Internal Status	• ACON (Main Circuit ON Signal) • PDETCMP (Polarity Detection Completed Signal) • DEN (Position Reference Distribution Completed Signal) • PSET (Positioning Completion Output Signal) • CMDRDY (Command Ready Signal)

9.3.3 Using the Analog Monitors

Connect a measuring instrument, such as a memory recorder, to the analog monitor connector (CN5) on the SERVOPACK to monitor analog signal waveforms. The measuring instrument is not provided by Yaskawa.

Refer to the following section for details on the connection.

☞ *4.8.3 Analog Monitor Connector (CN5)* on page 4-45

Setting the Monitor Object

Use Pn006 = n.□□XX and Pn007 = n.□□XX (Analog Monitor 1 and 2 Signal Selections) to set the items to monitor.

Line Color	Signal	Parameter Setting
White	Analog monitor 1	Pn006 = n.□□XX
Red	Analog monitor 2	Pn007 = n.□□XX
Black (2 lines)	GND	–

Parameter		Description		
		Monitor Signal	Output Unit	Remarks
Pn006 or Pn007	n.□□00 (default setting of Pn007)	Motor Speed	• Rotary Servomotor: 1 V/1,000 min^{-1} • Linear Servomotor: 1 V/1,000 mm/s	–
	n.□□01	Speed Reference	• Rotary Servomotor:1 V/1,000 min^{-1} • Linear Servomotor:1 V/1,000 mm/s	–
	n.□□02 (default setting of Pn006)	Torque Reference	1 V/100% rated torque	–
	n.□□03	Position Deviation	0.05 V/Reference unit	0 V for speed or torque control
	n.□□04	Position Amplifier Deviation	0.05 V/encoder pulse unit	Position deviation after electronic gear conversion
	n.□□05	Position Command Speed	• Rotary Servomotor:1 V/1,000 min^{-1} • Linear Servomotor:1 V/1,000 mm/s	–
	n.□□06	Reserved setting (Do not use.)	–	–
	n.□□07	Motor - Load Position Deviation	0.01 V/Reference unit	–
	n.□□08	Positioning Completion	Positioning completed: 5 V Positioning not completed: 0 V	Completion is indicated by the output voltage.
	n.□□09	Speed Feedforward	• Rotary Servomotor:1 V/1,000 min^{-1} • Linear Servomotor:1 V/1,000 mm/s	–
	n.□□0A	Torque Feedforward	1 V/100% rated torque	–
	n.□□0B	Active Gain*	1st gain: 1 V 2nd gain: 2 V	The gain that is active is indicated by the output voltage.
	n.□□0C	Completion of Position Reference Distribution	Distribution completed: 5 V Distribution not completed: 0 V	Completion is indicated by the output voltage.
	n.□□0D	External Encoder Speed	1 V/1,000 min^{-1}	Value calculated at the motor shaft
	n.□□10	Main Circuit DC Voltage	1 V/100 V (main circuit DC voltage)	–

* Refer to the following section for details.
☞ *8.12.1 Gain Switching* on page 8-66

Changing the Monitor Factor and Offset

You can change the monitor factors and offsets for the output voltages for analog monitor 1 and analog monitor 2. The relationships to the output voltages are as follows:

$$\text{Analog monitor 1 output voltage} = (-1) \times \left\{ \begin{array}{c}\text{Analog Monitor 1 Signal}\\ \text{Selection (Pn006 = n.□□XX)}\end{array} \times \begin{array}{c}\text{Analog Monitor 1}\\ \text{Magnification (Pn552)}\end{array} + \begin{array}{c}\text{Analog Monitor 1}\\ \text{Offset Voltage (Pn550)}\end{array} \right\}$$

$$\text{Analog monitor 2 output voltage} = (-1) \times \left\{ \begin{array}{c}\text{Analog Monitor 2 Signal}\\ \text{Selection (Pn007 = n.□□XX)}\end{array} \times \begin{array}{c}\text{Analog Monitor 2}\\ \text{Magnification (Pn553)}\end{array} + \begin{array}{c}\text{Analog Monitor 2}\\ \text{Offset Voltage (Pn551)}\end{array} \right\}$$

The following parameters are set.

Pn550	Analog Monitor 1 Offset Voltage			Speed Position Torque	
	Setting Range	Setting Unit	Default Setting	When Enabled	Classification
	-10,000 to 10,000	0.1 V	0	Immediately	Setup
Pn551	Analog Monitor 2 Offset Voltage			Speed Position Torque	
	Setting Range	Setting Unit	Default Setting	When Enabled	Classification
	-10,000 to 10,000	0.1 V	0	Immediately	Setup
Pn552	Analog Monitor 1 Magnification			Speed Position Torque	
	Setting Range	Setting Unit	Default Setting	When Enabled	Classification
	-10,000 to 10,000	×0.01	100	Immediately	Setup
Pn553	Analog Monitor 2 Magnification			Speed Position Torque	
	Setting Range	Setting Unit	Default Setting	When Enabled	Classification
	-10,000 to 10,000	×0.01	100	Immediately	Setup

Example

- Example for Setting the Item to Monitor to the Motor Speed (Pn006 = n.□□00)

When Pn552 = 100 (Setting Unit: ×0.01)

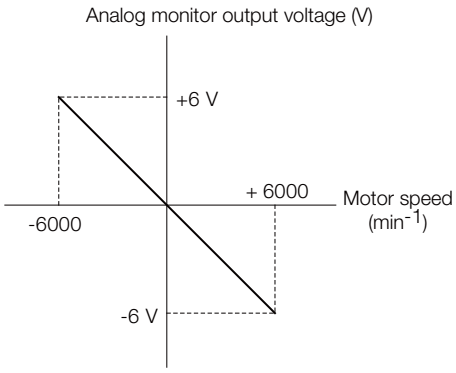

When Pn552 = 1,000 (Setting Unit: ×0.01)

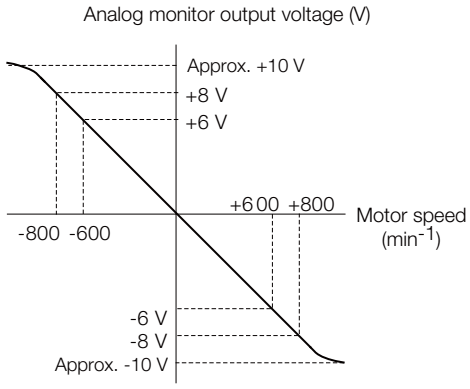

Note: The effective linearity range is ±8 V.
The resolution is 16 bits.

Adjusting the Analog Monitor Output

You can manually adjust the offset and gain for the analog monitor outputs for the torque reference monitor and motor speed monitor.

The offset is adjusted to compensate for offset in the zero point caused by output voltage drift or noise in the monitoring system.

The gain is adjusted to match the sensitivity of the measuring system.

The offset and gain are adjusted at the factory. You normally do not need to adjust them.

◆ Adjustment Example

An example of adjusting the output of the motor speed monitor is provided below.

Offset Adjustment

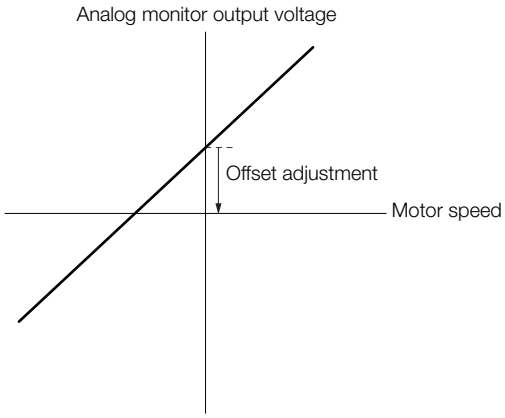

Item	Specification
Offset Adjustment Range	-2.4 V to 2.4 V
Adjustment Unit	18.9 mV/LSB

Gain Adjustment

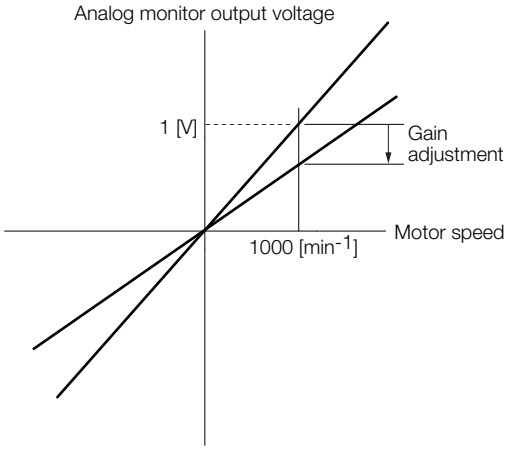

Item	Specification
Gain Adjustment Range	100 ±50%
Adjustment Unit	0.4%/LSB

The gain adjustment range is made using a 100% output value (gain adjustment of 0) as the reference value with an adjustment range of 50% to 150%.
A setting example is given below.

- Setting the Adjustment Value to -125
  100 + (-125 × 0.4) = 50 [%]
  Therefore, the monitor output voltage goes to 50% of the original value.
- Setting the Adjustment Value to 125
  100 + (125 × 0.4) = 150 [%]
  Therefore, the monitor output voltage goes to 150% of the original value.

Information

- The adjustment values do not use parameters, so they will not change even if the parameter settings are initialized.
- Adjust the offset with the measuring instrument connected so that the analog monitor output value goes to zero. The following setting example achieves a zero output.
  - While power is not supplied to the Servomotor, set the monitor signal to the torque reference.
  - In speed control, set the monitor signal to the position deviation.

◆ Preparations

Always check the following before you adjust the analog monitor output.

- The parameters must not be write prohibited.

◆ Applicable Tools

You can use the following tools to adjust analog monitor outputs. The function that is used is given for each tool.

- Offset Adjustment

Tool	Function	Operating Procedure Reference
Digital Operator	Fn00C	Σ-7-Series Digital Operator Operating Manual (Manual No.: SIEP S800001 33)
SigmaWin+	***Others – Adjust the Analog Monitor Output***	◆ *Operating Procedure* on page 9-13

- Gain Adjustment

Tool	Function	Operating Procedure Reference
Digital Operator	Fn00D	Σ-7-Series Digital Operator Operating Manual (Manual No.: SIEP S800001 33)
SigmaWin+	***Others – Adjust the Analog Monitor Output***	◆ *Operating Procedure* on page 9-13

◆ Operating Procedure

Use the following procedure to adjust the analog monitor output.

1. Click the Servo Drive Button in the workspace of the Main Window of the SigmaWin+.
2. Select **Adjust the Analog Monitor Output** in the Menu Dialog Box.
   The Adjust the Analog Monitor Output Dialog Box will be displayed.
3. Click the **Zero Adjustment** or **Gain Adjustment** Tab.

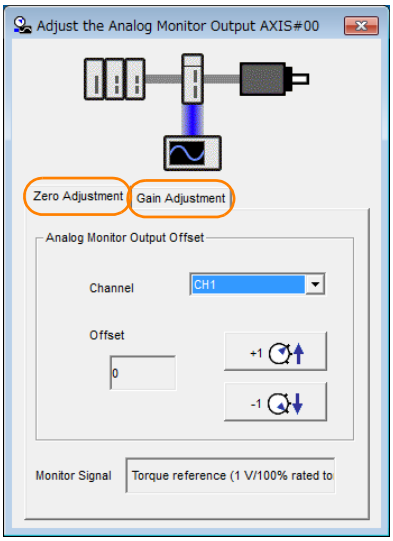

4. While watching the analog monitor, use the **+1** and **-1** Buttons to adjust the offset.
There are two channels: CH1 and CH2. If necessary, click the down arrow on the **Channel** Box and select the channel.

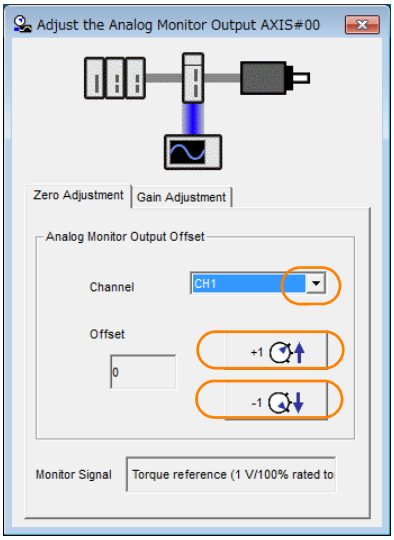

This concludes adjusting the analog monitor output.

9.4 Monitoring Product Life

9.4.1 Items That You Can Monitor

Monitor Item	Description
SERVOPACK Installation Environment	The operating status of the SERVOPACK in terms of the installation environment is displayed. Implement one or more of the following actions if the monitor value exceeds 100%. • Lower the surrounding temperature. • Decrease the load.
Servomotor Installation Environment	The operating status of the SERVOPACK in terms of the installation environment is displayed. Implement one or more of the following actions if the monitor value exceeds 100%. • Lower the surrounding temperature. • Decrease the load.
Built-in Fan Service Life Prediction	The unused status of the SERVOPACK is treated as the 100% value. The value decreases each time the main circuit power supply is turned ON and each time the servo is turned OFF. Use a monitor value of 0% as a guideline for the replacement period. Refer to the following section for part replacement guidelines. ☞ *12.1.2 Guidelines for Part Replacement* on page 12-2
Capacitor Service Life Prediction	The unused status of the SERVOPACK is treated as the 100% value. The value decreases each time the main circuit power supply is turned ON and each time the servo is turned OFF. Use a monitor value of 0% as a guideline for the replacement period. Refer to the following section for part replacement guidelines. ☞ *12.1.2 Guidelines for Part Replacement* on page 12-2
Surge Prevention Circuit Service Life Prediction	The unused status of the SERVOPACK is treated as the 100% value. The value decreases each time the main circuit power supply is turned ON and each time the servo is turned OFF. Use a monitor value of 0% as a guideline for the replacement period. Refer to the following section for part replacement guidelines. ☞ *12.1.2 Guidelines for Part Replacement* on page 12-2
Dynamic Brake Circuit Service Life Prediction	The unused status of the SERVOPACK is treated as the 100% value. The value decreases each time the main circuit power supply is turned ON and each time the servo is turned OFF. Use a monitor value of 0% as a guideline for the replacement period. Refer to the following section for part replacement guidelines. ☞ *12.1.2 Guidelines for Part Replacement* on page 12-2

9.4.2 Operating Procedure

Use the following procedure to display the installation environment and service life prediction monitor dialog boxes.

1. Click the Servo Drive Button in the workspace of the Main Window of the SigmaWin+.

2. Select **Life Monitor** in the Menu Dialog Box.
   The Life Monitor Dialog Box will be displayed.

Information With the Digital Operator, you can use Un025 to Un02A to monitor this information.

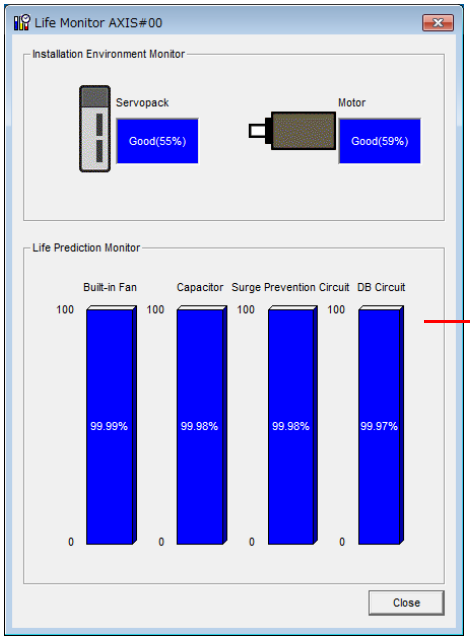

A value of 100% indicates that the SERVOPACK has not yet been used. The percentage decreases as the SERVOPACK is used and reaches 0% when it is time to replace the SERVOPACK.

9.4.3 Preventative Maintenance

You can use the following functions for preventative maintenance.

- Preventative maintenance warnings
- /PM (Preventative Maintenance Output) signal

The SERVOPACK can notify the host controller when it is time to replace any of the main parts.

Preventative Maintenance Warning

An A.9b0 warning (Preventative Maintenance Warning) is detected when any of the following service life prediction values drops to 10% or less: SERVOPACK built-in fan life, capacitor life, inrush current limiting circuit life, and dynamic brake circuit life. You can change the setting of Pn00F = n.□□□X to enable or disable these warnings.

Parameter		Description	When Enabled	Classification
Pn00F	n.□□□0 (default setting)	Do not detect preventative maintenance warnings.	After restart	Setup
	n.□□□1	Detect preventative maintenance warnings.		

/PM (Preventative Maintenance Output) Signal

The /PM (Preventative Maintenance Output) signal is output when any of the following service life prediction values reaches 10% or less: SERVOPACK built-in fan life, capacitor life, inrush current limiting circuit life, and dynamic brake circuit life. The /PM (Preventative Maintenance Output) signal must be allocated.

Even if detection of preventive maintenance warnings is disabled (Pn00F = n.□□□0), the /PM signal will still be output as long as it is allocated.

Classification	Signal	Connector Pin No.	Signal Status	Description
Output	/PM	Must be allocated.	ON (closed)	One of the following service life prediction values reached 10% or less: SERVOPACK built-in fan life, capacitor life, inrush current limiting circuit life, and dynamic brake circuit life.
			OFF (open)	All of the following service life prediction values are greater than 10%: SERVOPACK built-in fan life, capacitor life, inrush current limiting circuit life, and dynamic brake circuit life.

Note: You must allocate the /PM signal to use it. Use Pn514 = n.□X□□ (/PM (Preventative Maintenance Output) Signal Allocation) to allocate the signal to connector pins. Refer to the following section for details.
☞ *6.1.2 Output Signal Allocations* on page 6-5

9.5 Alarm Tracing

Alarm tracing records data in the SERVOPACK from before and after an alarm occurs. This data helps you to isolate the cause of the alarm.

You can display the data recorded in the SERVOPACK as a trace waveform on the SigmaWin+.

Information
- Alarms that occur when the power supply is turned ON are not recorded.
- Alarms that occur during the recording of alarm trace data are not recorded.
- Alarms that occur while utility functions are being executed are not recorded.

9.5.1 Data for Which Alarm Tracing Is Performed

Two types of data are recorded for alarm tracing: numeric data and I/O signal ON/OFF data.

Numeric Data
Torque reference
Feedback speed
Reference speed
Position reference speed
Position deviation
Motor-load position deviation
Main circuit bus voltage

ON/OFF Data
ALM
Servo ON command (/S-ON)
Proportional control command (/P-CON)
Forward torque command (/P-CL)
Reverse torque command (/N-CL)
G-SEL1 signal (/G-SEL1)
ACON

9.5.2 Applicable Tools

The following table lists the tools that you can use to perform alarm tracing and the applicable tool functions.

Tool	Function	Operating Procedure Reference
Digital Operator	You cannot display alarm tracing data from the Digital Operator.	
SigmaWin+	***Troubleshooting - Alarm Trace***	Engineering Tool SigmaWin+ Operation Manual (Manual No.: SIET S800001 34)

Fully-Closed Loop Control

10

This chapter provides detailed information on performing fully-closed loop control with the SERVOPACK.

10.1 Fully-Closed System 10-2

10.2 SERVOPACK Commissioning Procedure . . 10-3

10.3 Parameter Settings for Fully-Closed Loop Control 10-5

10.3.1 Control Block Diagram for Fully-Closed Loop Control 10-5
10.3.2 Setting the Motor Direction and the Machine Movement Direction 10-6
10.3.3 Setting the Number of External Encoder Scale Pitches 10-7
10.3.4 Setting the PAO, PBO, and PCO (Encoder Divided Pulse Output) Signals 10-7
10.3.5 External Absolute Encoder Data Reception Sequence 10-8
10.3.6 Electronic Gear Setting 10-8
10.3.7 Alarm Detection Settings 10-8
10.3.8 Analog Monitor Signal Settings 10-9
10.3.9 Setting to Use an External Encoder for Speed Feedback 10-9

10.1 Fully-Closed System

With a fully-closed system, an externally installed encoder is used to detect the position of the controlled machine and the machine's position information is fed back to the SERVOPACK. High-precision positioning is possible because the actual machine position is fed back directly. With a fully-closed system, looseness or twisting of mechanical parts may cause vibration or oscillation, resulting in unstable positioning.

Refer to the following manual for details on Fully-closed Modules.

Σ-7-Series Peripheral Device Selection Manual (Manual No.: SIEP S800001 32)

The following figure shows an example of the system configuration.

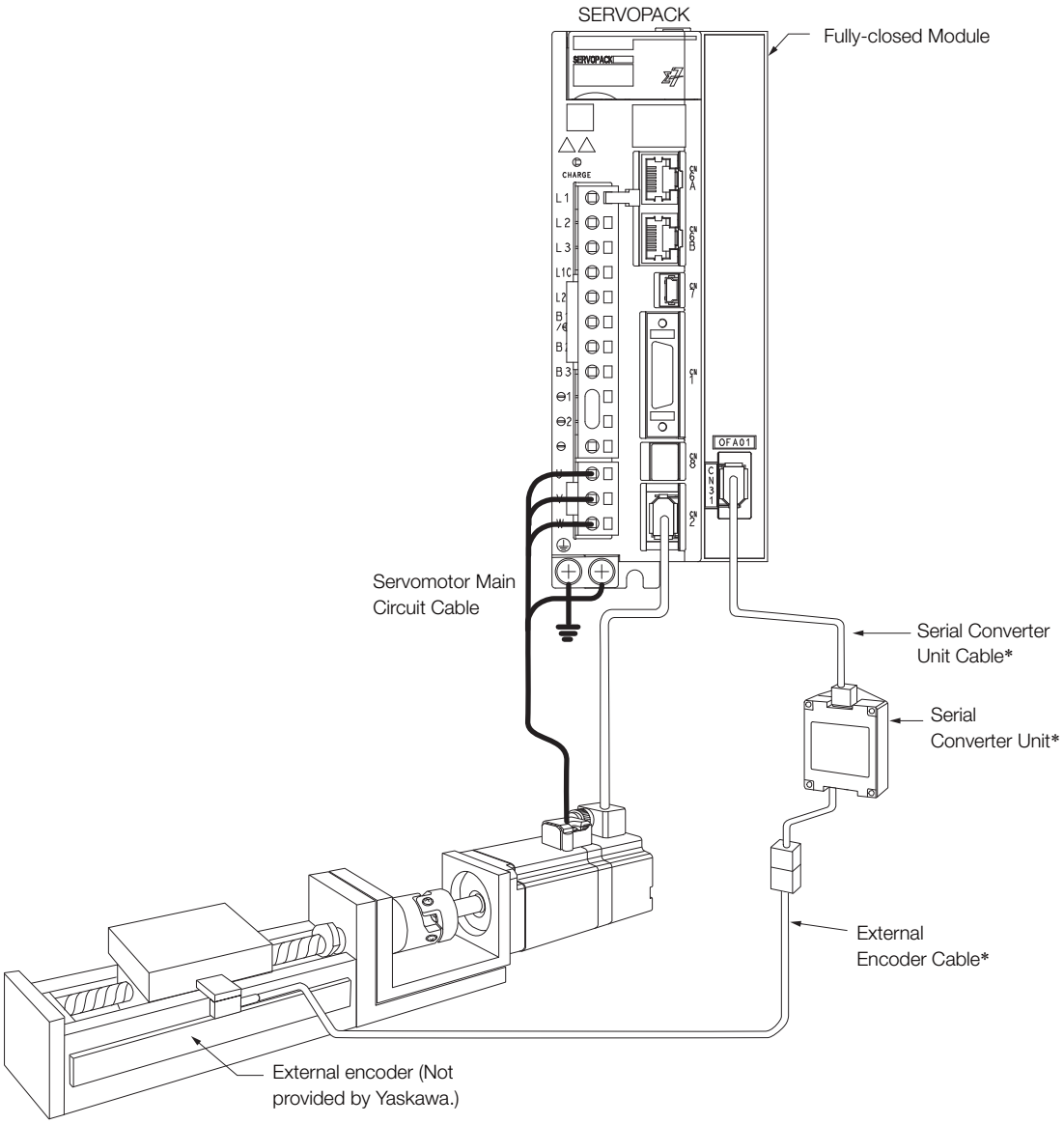

* The connected devices and cables depend on the type of external linear encoder that is used.

Note: Refer to the following section for details on connections that are not shown above, such as connections to power supplies and peripheral devices.

2.4 Examples of Standard Connections between SERVOPACKs and Peripheral Devices on page 2-24

10.2 SERVOPACK Commissioning Procedure

First, confirm that the SERVOPACK operates correctly with semi-closed loop control, and then confirm that it operates correctly with fully-closed loop control.
The commissioning procedure for the SERVOPACK for fully-closed loop control is given below.

Step	Description	Operation	Required Parameter Settings	Controlling Device
1	Check operation of the entire sequence with semi-closed loop control and without a load. Items to Check • Power supply circuit wiring • Servomotor wiring • Encoder wiring • Wiring of I/O signal lines from the host controller • Servomotor rotation direction, motor speed, and multiturn data • Operation of safety mechanisms, such as the brakes and the overtravel mechanisms	Set the parameters so that the SERVOPACK operates correctly in semi-closed loop control without a load and check the following points. Set Pn002 to n.0□□□ to specify semi-closed loop control. • Are there any errors in the SERVOPACK? • Does jogging function correctly when you operate the SERVOPACK without a load? • Do the I/O signals turn ON and OFF correctly? • Is power supplied to the Servomotor when the SV_ON (Servo ON) command is sent from the host controller? • Does the Servomotor operate correctly when a position reference is input by the host controller?	• Pn000 (Basic Function Select Switch 0) • Pn001 (Basic Function Select Switch 1) • Pn002 = n.X□□□ (External Encoder Usage) • Pn20E (Electronic Gear Ratio (Numerator)) • Pn210 (Electronic Gear Ratio (Denominator)) • Pn50A, Pn50B, Pn511, and Pn516 (Input Signal Selections) • Pn50E, Pn50F, Pn510, and Pn514 (Output Signal Selections)	SERVOPACK or host controller
2	Check operation with the Servomotor connected to the machine with semi-closed loop control. Items to Check • Initial response of the system connected to the machine • Movement direction, travel distance, and movement speed as specified by the references from the host controller	Connect the Servomotor to the machine. Set the moment of inertia ratio in Pn103 using autotuning without a host reference. Check that the machine's movement direction, travel distance, and movement speed agree with the references from the host controller.	Pn103 (Moment of Inertia Ratio)	Host controller
3	Check the external encoder. Items to Check Is the signal from the external encoder received correctly?	Set the parameters related to fully-closed loop control and move the machine with your hand without turning ON the power supply to the Servomotor. Check the following status with the Digital Operator or SigmaWin+. • Does the fully-closed feedback pulse counter count up when the Servomotor moves in the forward direction? • Is the travel distance of the machine visually about the same as the amount counted by the fully-closed feedback pulse counter? Note: The unit for the fully-closed feedback pulse counter is pulses, which is equivalent to the external encoder sine wave pitch.	• Pn002 = n.X□□□ (External Encoder Usage) • Pn20A (Number of External Scale Pitches) • Pn20E (Electronic Gear Ratio (Numerator)) • Pn210 (Electronic Gear Ratio (Denominator)) • Pn281 (Encoder Output Resolution) • Pn51B (Excessive Error Level between Servomotor and Load Positions) • Pn522 (Positioning Completed Width) • Pn52A (Multiplier per One Fully-closed Rotation)	–

Continued from previous page.

Step	Description	Operation	Required Parameter Settings	Controlling Device
4	Perform a program jogging operation. Items to Check Does the fully-closed system operate correctly for the SERVOPACK without a load?	Perform a program jogging operation and confirm that the travel distance is the same as the reference value in Pn531. When you perform program jogging, start from a low speed and gradually increase the speed.	Pn530 to Pn536 (program jogging-related parameters)	SERVOPACK
5	Operate the SERVOPACK. Items to Check Does the fully-closed system operate correctly, including the host controller?	Input a position reference and confirm that the SERVOPACK operates correctly. Start from a low speed and gradually increase the speed.	–	Host controller

10.3 Parameter Settings for Fully-Closed Loop Control

This section describes the parameter settings that are related to fully-closed loop control.

Parameter to Set	Setting	Position Control	Speed Control	Torque Control	Reference
Pn000 = n.□□□X	Motor direction	√	√	√	page 10-6
Pn002 = n.X□□□	External encoder usage method	√	√	√	
Pn20A	Number of external scale pitches	√	√	√	page 10-7
Pn281	Encoder divided pulse output signals (PAO, PBO, and PCO) from the SERVO-PACK	√	√	√	page 10-7
–	External absolute encoder data reception sequence	√	√	√	page 6-44
Pn20E and Pn210	Electronic gear ratio	√	–	–	page 5-44
Pn51B	Excessive deviation level between Servo-motor and load positions	√	–	–	page 10-8
Pn52A	Multiplier for one fully-closed rotation	√	–	–	
Pn006/Pn007	Analog monitor signal	√	√	√	page 10-9
Pn22A = n.X□□□	Speed feedback method during fully-closed loop control	√	–	–	page 10-9

10.3.1 Control Block Diagram for Fully-Closed Loop Control

The control block diagram for fully-closed loop control is provided below.

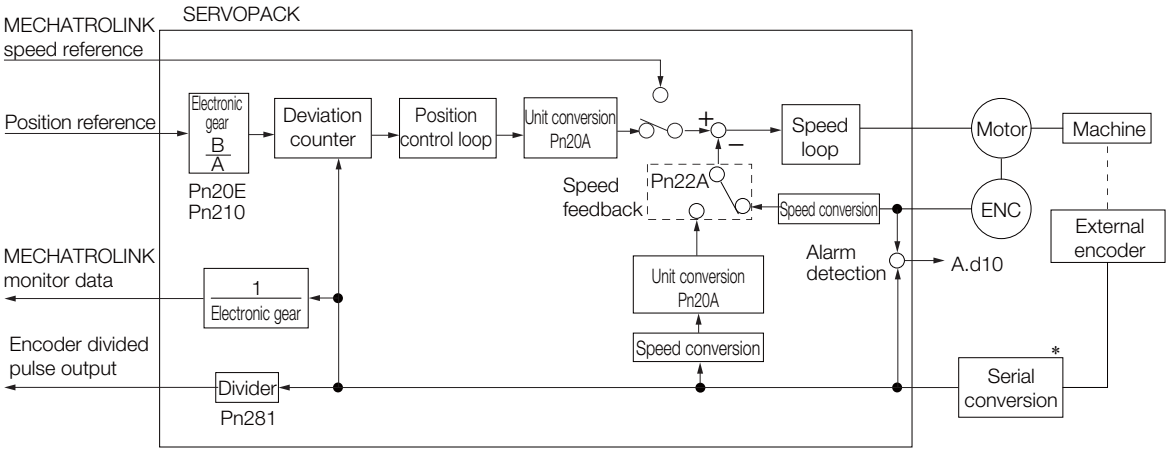

* The connected device depends on the type of external encoder.

Note: You can use either an incremental or an absolute encoder. If you use an absolute encoder, set Pn002 to n.□1□□ (Use the absolute encoder as an incremental encoder).

10.3.2 Setting the Motor Direction and the Machine Movement Direction

You must set the motor direction and the machine movement direction. To perform fully-closed loop control, you must set the motor rotation direction with both Pn000 = n.□□□X (Direction Selection) and Pn002 = n.X□□□ (External Encoder Usage).

Parameter			Pn002 = n.X□□□ (External Encoder Usage)			
			n.1□□□		n.3□□□	
Pn000 =n.□□□X (Direction Selection)	n.□□□0	Reference direction	Forward reference	Reverse reference	Forward reference	Reverse reference
		Motor direction	CCW	CW	CCW	CW
		External encoder	Forward movement	Reverse movement	Reverse movement	Forward movement
	n.□□□1	Reference direction	Forward reference	Reverse reference	Forward reference	Reverse reference
		Motor direction	CW	CCW	CW	CCW
		External encoder	Reverse movement	Forward movement	Forward movement	Reverse movement

- Phase B leads in the divided pulses for a forward reference regardless of the setting of Pn000 = n.□□□X.
- Forward direction: The direction in which the pulses are counted up.
- Reverse direction: The direction in which the pulses are counted down.

Related Parameters

◆ Pn000 = n.□□□X

Refer to the following section for details.

☞ *5.5 Motor Direction Setting* on page 5-17

◆ Pn002 = n.X□□□

When you perform fully-closed loop control, set Pn002 to n.1□□□ or n.3□□□.

Parameter		Name	Meaning	When Enabled	Classification
Pn002	n.0□□□ (default setting)	External Encoder Usage	Do not use an external encoder.	After restart	Setup
	n.1□□□		External encoder moves in forward direction for CCW motor rotation.		
	n.2□□□		Reserved setting (Do not use.)		
	n.3□□□		External encoder moves in reverse direction for CCW motor rotation.		
	n.4□□□		Reserved setting (Do not use.)		

Information

Determine the setting of Pn002 = n.X□□□ as described below.
- Set Pn000 to n.□□□0 (Use the direction in which the linear encoder counts up as the forward direction) and set Pn002 to n.1□□□ (The external encoder moves in the forward direction for CCW motor rotation).
- Manually rotate the motor shaft counterclockwise.
- If the fully-closed feedback pulse counter counts up, do not change the setting of Pn002 (Pn002 = n.1□□□).
- If the fully-closed feedback pulse counter counts down, set Pn002 to n.3□□□.

10.3.3 Setting the Number of External Encoder Scale Pitches

Set the number of external encoder scale pitches per Servomotor rotation in Pn20A.

Setting Example

Specifications
External encoder scale pitch: 20 μm
Ball screw lead: 30 mm

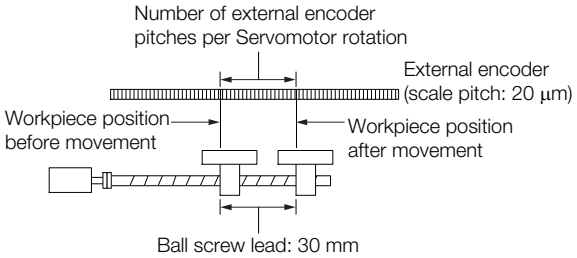

If the external encoder is connected directly to the Servomotor, the setting will be 1,500 (30 mm/0.02 mm = 1,500).

Note: 1. If there is a fraction, round off the digits below the decimal point.
2. If the number of external encoder scale pitches per Servomotor rotation is not an integer, there will be deviation in the position loop gain (Kp), feedforward, and position reference speed monitor. This is not relevant for the position loop and it therefore does not interfere with the position accuracy.

Related Parameters

Pn20A	Number of External Scale Pitches				Position
	Setting Range	Setting Unit	Default Setting	When Enabled	Classification
	4 to 1,048,576	1 scale pitch/revolution	32,768	After restart	Setup

10.3.4 Setting the PAO, PBO, and PCO (Encoder Divided Pulse Output) Signals

Set the position resolution in Pn281 (Encoder Output Resolution).

Enter the number of phase A and phase B edges for the setting.

Setting Example

Specifications
External encoder scale pitch: 20 μm
Ball screw lead: 30 mm
Speed:1,600 mm/s

If a single pulse (multiplied by 4) is output for 1 μm, the setting would be 20.

If a single pulse (multiplied by 4) is output for 0.5 μm, the setting would be 40.

The encoder divided pulse output would have the following waveform if the setting is 20.

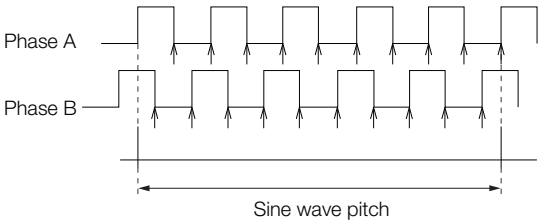

"↑" indicates the edge positions. In this example, the set value is 20 and therefore the number of edges is 20.

Note: The upper limit of the encoder signal output frequency (multiplied by 4) is 6.4 Mpps. Do not set a value that would cause the output to exceed 6.4 Mpps.
If the output exceeds the upper limit, an A.511 alarm (Overspeed of Encoder Output Pulse Rate) will be output.

Example

If the setting is 20 and the speed is 1,600 mm/s, the output frequency would be 1.6 Mpps

$$\frac{1600\ \text{mm/s}}{0.001\ \text{mm}} = 1{,}600{,}000 = 1.6\ \text{Mpps}$$

Because 1.6 Mpps is less than 6.4 Mpps, this setting can be used.

Related Parameters

Pn281	Encoder Output Resolution				Position
	Setting Range	Setting Unit	Default Setting	When Enabled	Classification
	1 to 4,096	1 edge/pitch	20	After restart	Setup

Note: The maximum setting for the encoder output resolution is 4,096.
If the resolution of the external encoder exceeds 4,096, pulse output will no longer be possible at the resolution given in ■ *Feedback Resolution of Linear Encoder* on page 5-47.

10.3.5 External Absolute Encoder Data Reception Sequence

Refer to the following section for details.

☞ *6.9.4 Reading the Position Data from the Absolute Linear Encoder* on page 6-44

With fully-closed loop control, the same sequence as for a Linear Servomotor is used.

10.3.6 Electronic Gear Setting

Refer to the following section for details.

☞ *5.15 Electronic Gear Settings* on page 5-44

With fully-closed loop control, the same setting as for a Linear Servomotor is used.

10.3.7 Alarm Detection Settings

This section describes the alarm detection settings (Pn51B and Pn52A).

Pn51B (Excessive Error Level between Servomotor and Load Positions)

This setting is used to detect the difference between the feedback position of the Servomotor encoder and the feedback load position of the external encoder for fully-closed loop control. If the detected difference exceeds the setting, an A.d10 alarm (Motor-Load Position Error Overflow) will be output.

Pn51B	Excessive Error Level between Servomotor and Load Positions				Position
	Setting Range	Setting Unit	Default Setting	When Enabled	Classification
	0 to 1,073,741,824	1 reference unit	1000	Immediately	Setup

Note: If you set this parameter to 0, A.d10 alarms will not be output and the machine may be damaged.

Pn52A (Multiplier per One Fully-closed Rotation)

Set the coefficient of the deviation between the Servomotor and the external encoder per Servomotor rotation.
This setting can be used to prevent the Servomotor from running out of control due to damage to the external encoder or to detect belt slippage.

◆ Setting Example

Increase the value if the belt slips or is twisted excessively.

If this parameter is set to 0, the external encoder value will be read as it is.

If you use the default setting of 20, the second rotation will start with the deviation for the first Servomotor rotation multiplied by 0.8.

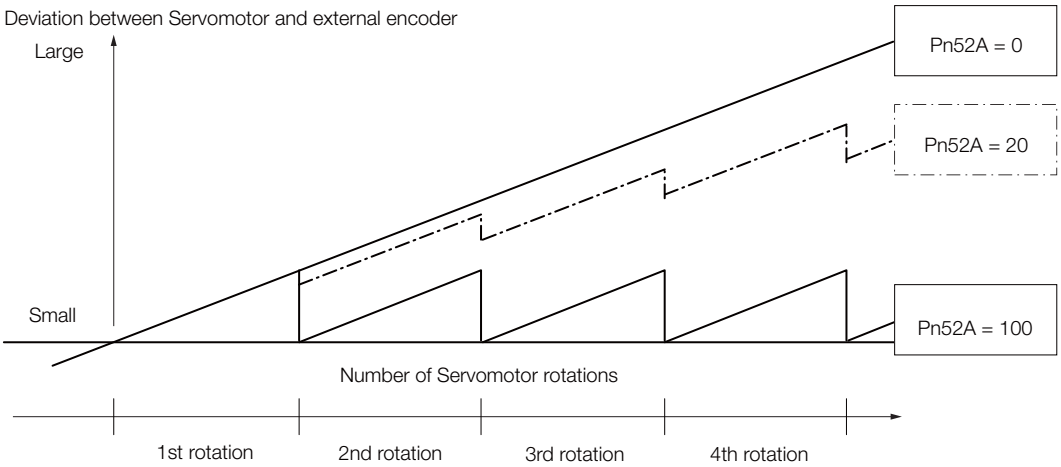

◆ Related Parameters

Pn52A	Multiplier per One Fully-closed Rotation				Position
	Setting Range	Setting Unit	Default Setting	When Enabled	Classification
	0 to 100	1%	20	Immediately	Setup

10.3.8 Analog Monitor Signal Settings

You can monitor the position deviation between the Servomotor and load with an analog monitor.

Parameter		Name	Meaning	When Enabled	Classification
Pn006	n.□□07	Analog Monitor 1 Signal Selection	Position deviation between motor and load (output unit: 0.01 V/reference unit).	Immediately	Setup
Pn007	n.□□07	Analog Monitor 2 Signal Selection	Position deviation between motor and load (output unit: 0.01 V/reference unit).		

10.3.9 Setting to Use an External Encoder for Speed Feedback

For fully-closed loop control, you normally set a parameter to specify using the motor encoder speed (Pn22A = n.0□□□).
If you will use a Direct Drive Servomotor and a high-resolution external encoder, set the parameter to specify using the speed of the external encoder (Pn22A = n.1□□□).

Parameter		Meaning	When Enabled	Classification
Pn22A	n.0□□□ (default setting)	Use motor encoder speed.	After restart	Setup
	n.1□□□	Use external encoder speed.		

Note: This parameter cannot be used if Pn002 is set to n.0□□□ (Do not use external encoder).

Safety Functions

11

This chapter provides detailed information on the safety functions of the SERVOPACK.

11.1 Introduction to the Safety Functions 11-2

11.1.1 Safety Functions 11-2
11.1.2 Precautions for Safety Functions 11-2

11.2 Hard Wire Base Block (HWBB) 11-3

11.2.1 Risk Assessment 11-3
11.2.2 Hard Wire Base Block (HWBB) State 11-4
11.2.3 Resetting the HWBB State 11-5
11.2.4 Related Commands 11-6
11.2.5 Detecting Errors in HWBB Signal 11-6
11.2.6 HWBB Input Signal Specifications 11-6
11.2.7 Operation without a Host Controller 11-7
11.2.8 /S-RDY (Servo Ready Output) Signal 11-7
11.2.9 /BK (Brake Output) Signal 11-8
11.2.10 Stopping Methods 11-8
11.2.11 ALM (Servo Alarm) Signal 11-8

11.3 EDM1 (External Device Monitor) 11-9

11.3.1 EDM1 Output Signal Specifications 11-9

11.4 Applications Examples for Safety Functions . . 11-10

11.4.1 Connection Example 11-10
11.4.2 Failure Detection Method 11-10
11.4.3 Procedure 11-11

11.5 Validating Safety Functions 11-12

11.6 Connecting a Safety Function Device . . . 11-13

11.1 Introduction to the Safety Functions

11.1.1 Safety Functions

Safety functions are built into the SERVOPACK to reduce the risks associated with using the machine by protecting workers from the hazards of moving machine parts and otherwise increasing the safety of machine operation.
Especially when working in hazardous areas inside guards, such as for machine maintenance, the safety function can be used to avoid hazardous moving machine parts.

Refer to the following section for information on the safety function and safety parameters.
☞ *Compliance with UL Standards, EU Directives, and Other Safety Standards* on page xxv

Important

Products that display the TÜV mark on the nameplate have met the safety standards.

11.1.2 Precautions for Safety Functions

⚠ WARNING

- To confirm that the HWBB function satisfies the safety requirements of the system, you must conduct a risk assessment of the system.
  Incorrect use of the safety function may cause injury.
- The Servomotor will move if there is an external force (e.g., gravity on a vertical axis) even when the HWBB function is operating. Use a separate means, such as a mechanical brake, that satisfies the safety requirements.
  Incorrect use of the safety function may cause injury.
- While the HWBB function is operating, the Servomotor may move within an electric angle of 180° or less as a result of a SERVOPACK failure. Use the HWBB function for an application only after confirming that movement of the Servomotor will not result in a hazardous condition.
  Incorrect use of the safety function may cause injury.
- The dynamic brake and the brake signal are not safety-related elements. You must design the system so that SERVOPACK failures will not cause a hazardous condition while the HWBB function is operating.
  Incorrect use of the safety function may cause injury.
- Connect devices that satisfy the safety standards for the signals for safety functions.
  Incorrect use of the safety function may cause injury.
- The HWBB function does not shut OFF the power to the SERVOPACK or electrically isolate it. Implement measures to shut OFF the power supply to the SERVOPACK before you perform maintenance on it.
  There is a risk of electric shock.

11.2 Hard Wire Base Block (HWBB)

A hard wire base block (abbreviated as HWBB) is a safety function that is designed to shut OFF the current to the Servomotor with a hardwired circuit.
The drive signals to the Power Module that controls the motor current are controlled by the circuits that are independently connected to the two input signal channels to turn OFF the Power Module and shut OFF the motor current.

> **Important**
> For safety function signal connections, the input signal is the 0-V common and the output signal is a source output.
> This is opposite to other signals described in this manual.
> To avoid confusion, the ON and OFF status of signals for the safety function are defined as follows:
> ON: The state in which the relay contacts are closed or the transistor is ON and current flows into the signal line.
> OFF: The state in which the relay contacts are open or the transistor is OFF and no current flows into the signal line.

The input signal uses the 0-V common. The following figure shows a connection example.

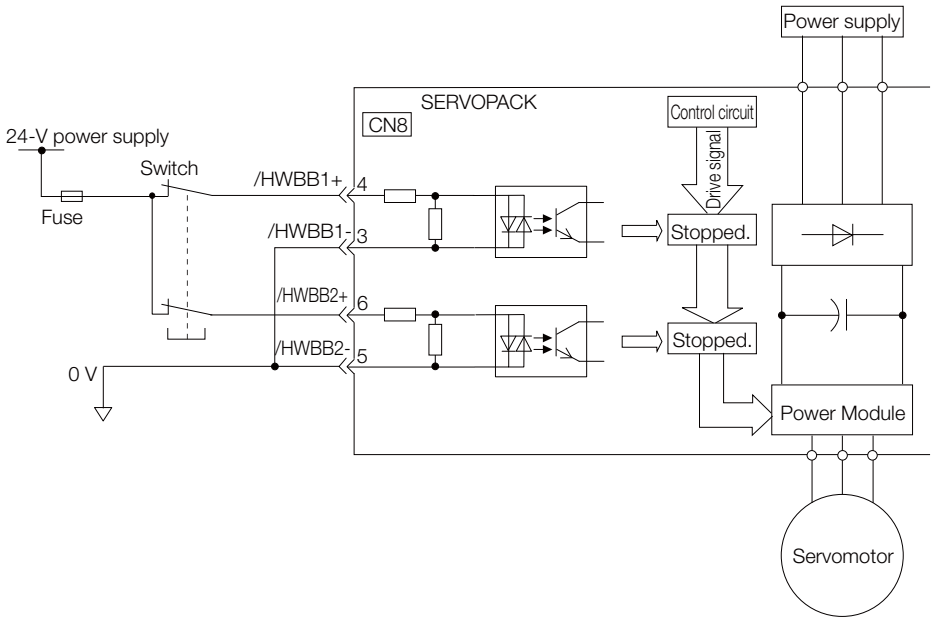

11.2.1 Risk Assessment

When using the HWBB, you must perform a risk assessment of the servo system in advance to confirm that the safety level of the standards is satisfied. Refer to the following section for details on the standards.

☞ *Compliance with UL Standards, EU Directives, and Other Safety Standards* on page xxv

Note: To meet performance level e (PLe) in EN ISO 13849-1 and SIL3 in IEC 61508, the EDM1 signal must be monitored by the host controller. If the EDM1 signal is not monitored by the host controller, the levels will be safety performance level c (PLc) and SIL1.

The following hazards exist even when the HWBB is operating. These hazards must be included in the risk assessment.

- The Servomotor will move if an external force is applied to it (for example, gravity on a vertical axis). Implement measures to hold the Servomotor, such as installing a separate mechanical brake.

- If a failure occurs such as a Power Module failure, the Servomotor may move within an electric angle of 180°. Ensure safety even if the Servomotor moves.
  The rotational angle or travel distance depends on the type of Servomotor as follows:
  - Rotary Servomotor: 1/6 rotation max. (rotational angle calculated at the motor shaft)
  - Direct Drive Servomotor: 1/20 rotation max. (rotational angle calculated at the motor shaft)
  - Linear Servomotor: 50 mm max.
- The HWBB does not shut OFF the power to the SERVOPACK or electrically isolate it. Implement measures to shut OFF the power supply to the SERVOPACK before you perform maintenance on it.

11.2.2 Hard Wire Base Block (HWBB) State

The SERVOPACK will be in the following state if the HWBB operates. If the /HWBB1 or /HWBB2 signal turns OFF, the HWBB will operate and the SERVOPACK will enter a HWBB state.

• When HWBB Operates after Servo OFF (Power Not Supplied to Motor)

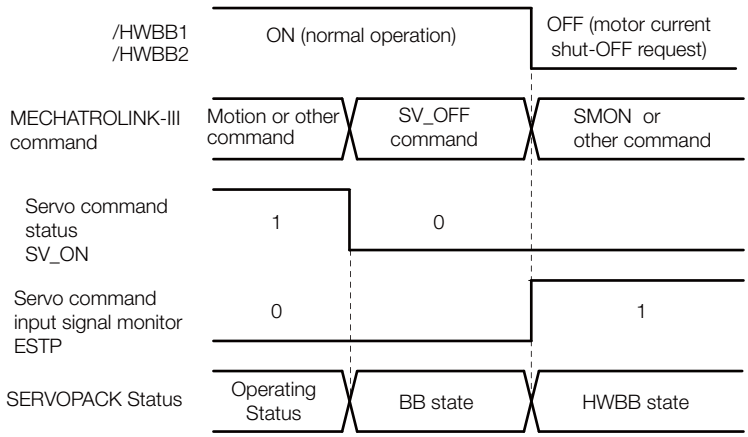

• When HWBB Operates While Power Is Supplied to Servomotor

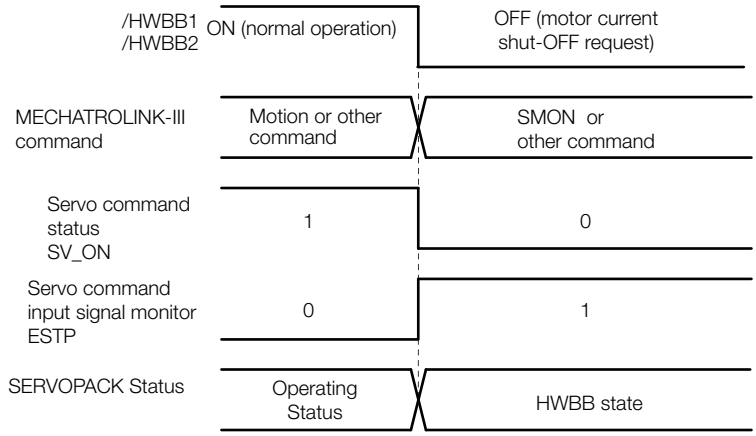

11.2.3 Resetting the HWBB State

Normally, after the SV_OFF (Servo OFF: 32h) command is received and power is no longer supplied to the Servomotor, the /HWBB1 and /HWBB2 signals will turn OFF and the SERVOPACK will enter the HWBB state. If you turn ON the /HWBB1 and /HWBB2 signals in this state, the SERVOPACK will enter a base block (BB) state and will be ready to acknowledge the SV_ON (Servo ON: 31h) command.

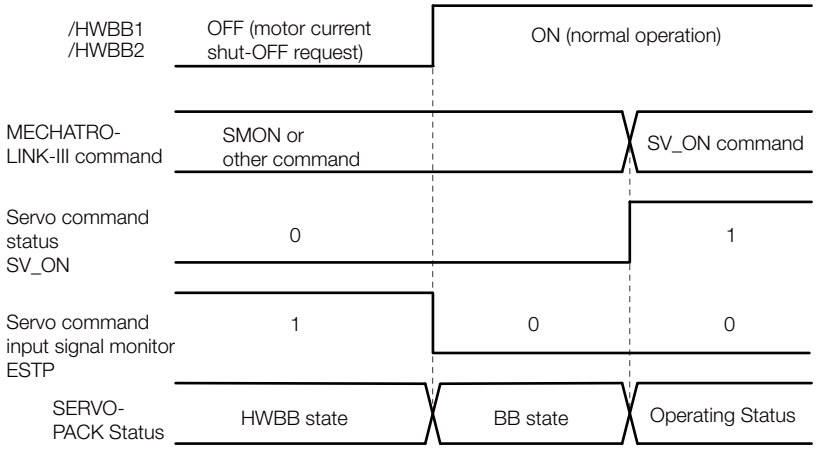

If the /HWBB1 and /HWBB2 signals are OFF and the SV_ON (Servo ON: 31h) command is received, the HWBB state will be maintained even after the /HWBB1 and /HWBB2 signals are turned ON. Send the SV_OFF (Servo OFF: 32h) command to place the SERVOPACK in the BB state and then send the SV_ON (Servo ON: 31h) command.

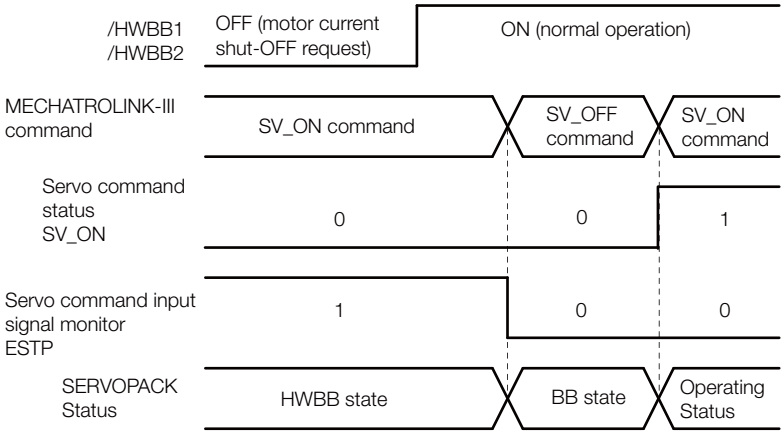

Note: If the SERVOPACK is placed in the BB state while the main circuit power supply is OFF, the HWBB state will be maintained until the SV_OFF (Servo OFF: 32h) command is received.

11.2.4 Related Commands

If the /HWBB1 or /HWBB2 signal turns OFF and the HWBB operates, the ESTP bit in the servo command input signal monitor (SVCMD_IO) will change to 1. The host controller can monitor this bit to determine the status.
If the state changes to the HWBB state during the execution of the next motion command, a command warning occurs. If a warning occurs, clear the alarm to return to normal operating status. After stopping or canceling the motion command, using the sequence of commands to return to the HWBB status is recommended.

Applicable Motion Commands
SV_ON (Servo ON)
INTERPORATE (Interpolating)
POSING (Positioning)
FEED (Constant Speed Feed)
EX_FEED (External Input Feed Command)
EX_POSING (External Input Positioning)
ZRET (Origin Return)

11.2.5 Detecting Errors in HWBB Signal

If only the /HWBB1 or the /HWBB2 signal is input, an A.Eb1 alarm (Safety Function Signal Input Timing Error) will occur unless the other signal is input within 10 seconds. This makes it possible to detect failures, such as disconnection of an HWBB signal.

⚠ CAUTION

- The A.Eb1 alarm (Safety Function Signal Input Timing Error) is not a safety-related element. Keep this in mind when you design the system.

11.2.6 HWBB Input Signal Specifications

If an HWBB is requested by turning OFF the two HWBB input signal channels (/HWBB1 and /HWBB2), the power supply to the Servomotor will be turned OFF within 8 ms.

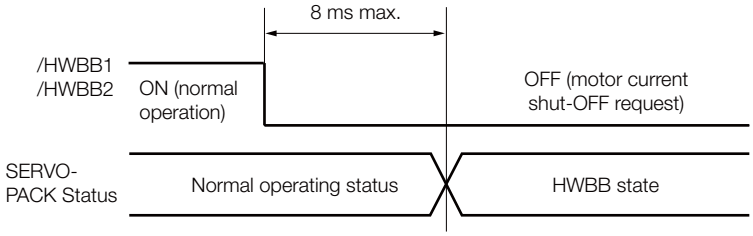

Note: 1. The OFF status is not recognized if the OFF interval of the /HWBB1 or /HWBB2 signal is 0.5 ms or shorter.
2. You can check the status of the input signals by using monitor displays.

11.2.7 Operation without a Host Controller

The HWBB will operate even for operation without a host controller.

However, if the HWBB operates during execution of the following functions, leave the execution mode for the function and then enter it again to restart operation. Operation will not be restarted simply by turning OFF the /HWBB1 and /HWBB2 signals.

Applicable Functions	Resetting the HWBB State
• Jogging • Origin search • Program jogging • Automatic adjustment without host reference • Easy FFT • Adjustment of motor current detection signal offset	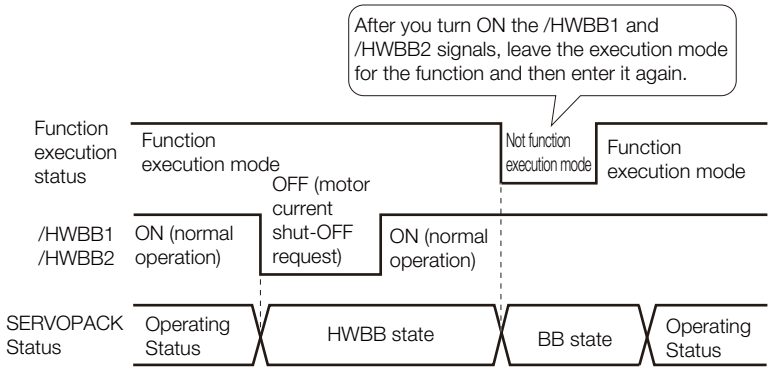

11.2.8 /S-RDY (Servo Ready Output) Signal

The SV_ON (Servo ON: 31h) command will not be acknowledged in the HWBB state. Therefore, the Servo Ready Output Signal will turn OFF.
The Servo Ready Output Signal will turn ON if both the /HWBB1 and /HWBB2 signals are ON and the servo is turned OFF (BB state).

An example is provided below for when the main circuit power supply is ON and the SENS_ON (Turn Sensor ON) command is input when there is no servo alarm. (An absolute encoder is used in this example.)

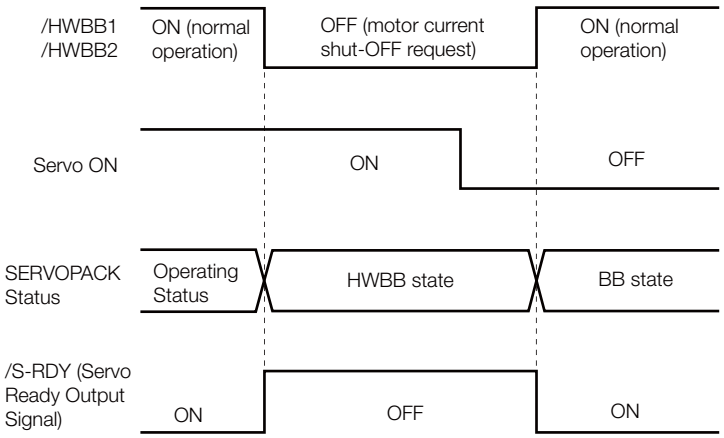

11.2.9 /BK (Brake Output) Signal

If the HWBB operates when the /HWBB1 or /HWBB2 signal is OFF, the /BK (Brake) signal will turn OFF. At that time, the setting in Pn506 (Brake Reference - Servo OFF Delay Time) will be disabled. Therefore, the Servomotor may be moved by external force until the actual brake becomes effective after the /BK signal turns OFF.

⚠ CAUTION

- The brake signal is not a safety-related element. You must design the system so that a hazardous condition does not occur even if the brake signal fails in the HWBB state. Also, if a Servomotor with a Brake is used, keep in mind that the brake in the Servomotor is used only to prevent the moving part from being moved by gravity or an external force and it cannot be used to stop the Servomotor.

11.2.10 Stopping Methods

If the /HWBB1 or /HWBB2 signal turns OFF and the HWBB operates, the Servomotor will stop according to the stop mode that is set for stopping the Servomotor when the servo turns OFF (Pn001 = n.□□□X). However, if the dynamic brake is enabled (Pn001 = n.□□□0 or n.□□□1), observe the following precautions.

⚠ CAUTION

- The dynamic brake is not a safety-related element. You must design the system so that a hazardous condition does not occur even if the Servomotor coasts to a stop in the HWBB state. Normally, we recommend that you use a sequence that returns to the HWBB state after stopping for a reference.
- If the application frequently uses the HWBB, stopping with the dynamic brake may result in the deterioration of elements in the SERVOPACK. To prevent internal elements from deteriorating, use a sequence in which the HWBB state is returned to after the Servomotor has come to a stop.

11.2.11 ALM (Servo Alarm) Signal

The ALM (Servo Alarm) signal is not output in the HWBB state.

11.3 EDM1 (External Device Monitor)

The EDM1 (External Device Monitor) signal is used to monitor failures in the HWBB. Connect the monitor signal as a feedback signal, e.g., to the Safety Unit.

Note: To meet performance level e (PLe) in EN ISO 13849-1 and SIL3 in IEC 61508, the EDM1 signal must be monitored by the host controller. If the EDM1 signal is not monitored by the host controller, the level will be safety performance level c (Plc) and SIL1.

- Failure Detection Signal for EDM1 Signal

The relationship between the EDM1, /HWBB1, and /HWBB2 signals is shown below.

Detection of failures in the EDM1 signal circuit can be achieved by using the status of the /HWBB1, /HWBB2, and EDM1 signals in the following table. A failure can be detected by checking the failure status, e.g., when the power supply is turned ON.

Signal	Logic			
/HWBB1	ON	ON	OFF	OFF
/HWBB2	ON	OFF	ON	OFF
EDM1	OFF	OFF	OFF	ON

⚠ WARNING

- The EDM1 signal is not a safety output. Use it only for monitoring for failures.

11.3.1 EDM1 Output Signal Specifications

If an HWBB is requested by turning OFF the two HWBB input signal channels (/HWBB1 and /HWBB2) when the safety function is operating normally, the EDM1 output signal will be turned ON within 8 ms.

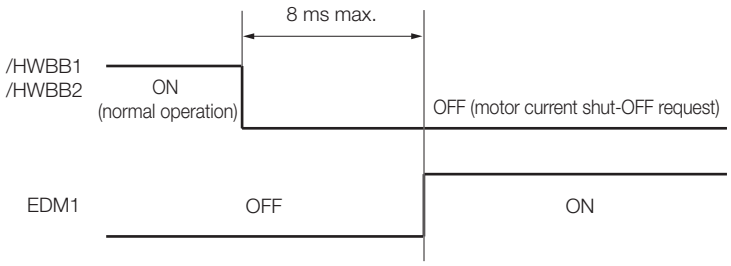

11.4 Applications Examples for Safety Functions

This section provides examples of using the safety functions.

11.4.1 Connection Example

In the following example, a Safety Unit is used and the HWBB operates when the guard is opened.

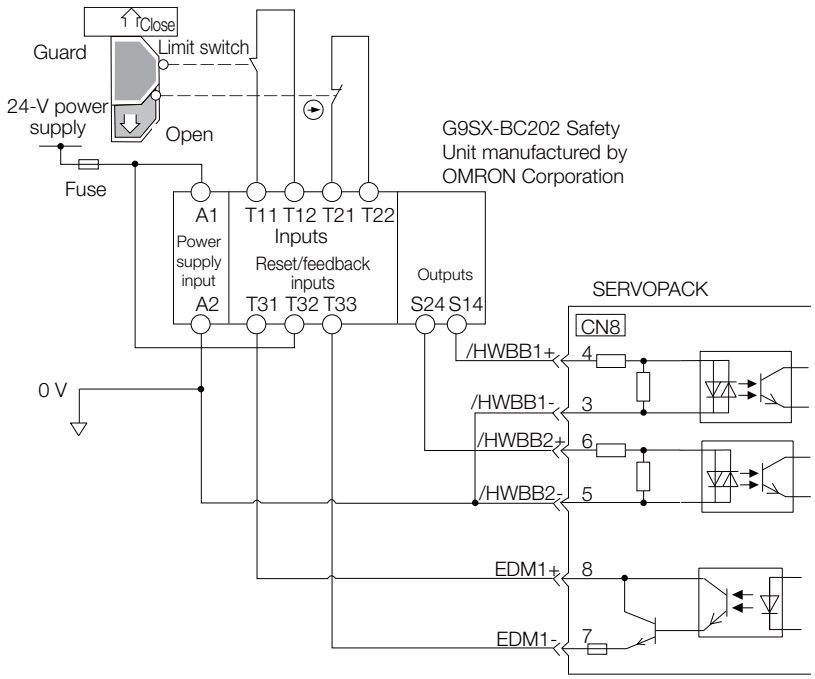

When the guard is opened, both the /HWBB1 and the /HWBB2 signals turn OFF, and the EDM1 signal turns ON. Because the feedback circuit is ON while the guard is closed, the Safety Unit is reset, the /HWBB1 and the / HWBB2 signals turn ON, and the operation is enabled.

Note: The EDM1 signal is used as a source output. Connect the EDM1 so that the current flows from EMD1+ to EMD1-.

11.4.2 Failure Detection Method

If a failure occurs (e.g., the /HWBB1 or the /HWBB2 signal remains ON), the Safety Unit is not reset when the guard is closed because the EDM1 signal remains OFF. Therefore starting is not possible and a failure is detected.
In this case the following must be considered: an error in the external device, disconnection of the external wiring, short-circuiting in the external wiring, or a failure in the SERVOPACK. Find the cause and correct the problem.

11.4.3 Procedure

1	Request is received to open the guard.
2	If the Servomotor is operating, a stop command is received from the host controller, the Servomotor stops, and the servo is turned OFF.
3	The guard is opened.
4	The /HWBB1 and /HWBB2 signals turn OFF and the HWBB operates. (Working inside the guard is enabled.)
5	The worker leaves the guarded area after completing work.
6	The guard is closed.
7	The servo is turned ON by the host controller.

11.5 Validating Safety Functions

When you commission the system or perform maintenance or SERVOPACK replacement, you must always perform the following validation test on the HWBB after completing the wiring. (It is recommended that you keep the confirmation results as a record.)

- When the /HWBB1 and /HWBB2 signals turn OFF, confirm that the Digital Operator displays **Hbb** and that the Servomotor does not operate.
- Monitor the ON/OFF status of the /HWBB1 and /HWBB2 signals.
  If the ON/OFF status of the signals do not coincide with the display, the following must be considered: an error in the external device, disconnection of the external wiring, short-circuiting in the external wiring, or a failure in the SERVOPACK. Find the cause and correct the problem.
- Confirm that the EDM1 signal is OFF while in normal operation by using the feedback circuit input display of the connected device.

11.6 Connecting a Safety Function Device

Use the following procedure to connect a safety function device.

1. Remove the Safety Jumper Connector from the connector for the safety function device (CN8).

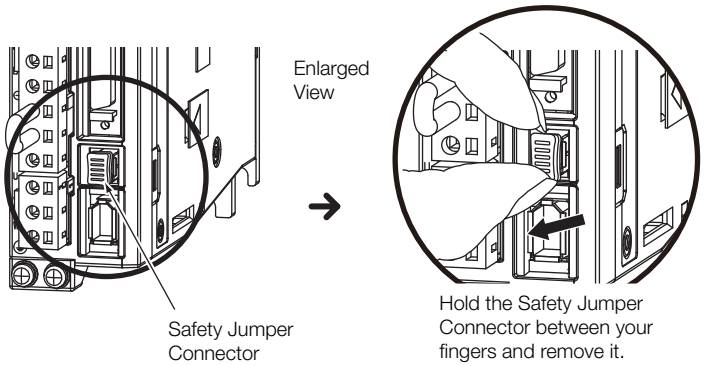

2. Connect the safety function device to the connector for the safety function device (CN8).

Note: If you do not connect a safety function device, leave the Safety Jumper Connector connected to the connector for the safety function device (CN8). If the SERVOPACK is used without the Safety Jumper Connector connected to CN8, no current will be supplied to the Servomotor and no motor torque will be output. In this case, **Hbb** will be displayed on the Digital Operator.

Maintenance

12

This chapter provides information on the meaning of, causes of, and corrections for alarms and warnings.

12.1 Inspections and Part Replacement 12-2

12.1.1 Inspections 12-2
12.1.2 Guidelines for Part Replacement 12-2
12.1.3 Replacing the Battery 12-3

12.2 Alarm Displays 12-5

12.2.1 List of Alarms 12-5
12.2.2 Troubleshooting Alarms 12-11
12.2.3 Resetting Alarms 12-42
12.2.4 Displaying the Alarm History 12-43
12.2.5 Clearing the Alarm History 12-44
12.2.6 Resetting Alarms Detected in Option Modules 12-45
12.2.7 Resetting Motor Type Alarms 12-47

12.3 Warning Displays 12-49

12.3.1 List of Warnings 12-49
12.3.2 Troubleshooting Warnings 12-51

12.4 Monitoring Communications Data during Alarms or Warnings . . 12-58

12.5 Troubleshooting Based on the Operation and Conditions of the Servomotor . . 12-59

12.1 Inspections and Part Replacement

This section describes inspections and part replacement for SERVOPACKs.

12.1.1 Inspections

Perform the inspections given in the following table at least once every year for the SERVOPACK. Daily inspections are not required.

Item	Frequency	Inspection	Correction
Exterior	At least once a year	Check for dust, dirt, and oil on the surfaces.	Clean with compressed air or a cloth.
Loose Screws		Check for loose terminal block and connector screws and for other loose parts.	Tighten any loose screws or other loose parts.

12.1.2 Guidelines for Part Replacement

The following electric or electronic parts are subject to mechanical wear or deterioration over time. Use one of the following methods to check the standard replacement period.

- Use the service life prediction function of the SERVOPACK.
  Refer to the following section for information on service life predictions.
  ☞ *9.4 Monitoring Product Life* on page 9-15
- Use the following table.

Part	Standard Replacement Period	Remarks
Cooling Fan	4 years to 5 years	The standard replacement periods given on the left are for the following operating conditions. • Surrounding air temperature: Annual average of 30°C • Load factor: 80% max. • Operation rate: 20 hours/day max.
Electrolytic Capacitor	10 years	
Relays	100,000 power ON operations	Power ON frequency: Once an hour
Battery	3 years without power supplied	Surrounding temperature without power supplied: 20°C

When any standard replacement period is close to expiring, contact your Yaskawa representative. After an examination of the part in question, we will determine whether the part should be replaced.

Important

The parameters of any SERVOPACKs that are sent to Yaskawa for part replacement are reset to the factory settings before they are returned to you. Always keep a record of the parameter settings. And, always confirm that the parameters are properly set before starting operation.

12.1.3 Replacing the Battery

If the battery voltage drops to approximately 2.7 V or less, an A.830 alarm (Encoder Battery Alarm) or an A.930 warning (Encoder Battery Warning) will be displayed.

If this alarm or warning is displayed, the battery must be replaced.
Refer to the following section for the battery replacement procedure.
☞ *Battery Replacement Procedure* on page 12-3

Battery Alarm/Warning Selection

Whether to display an alarm or a warning is determined by the setting of Pn008 = n.□□□X (Low Battery Voltage Alarm/Warning Selection).

Parameter		Meaning	When Enabled	Classification
Pn008	n.□□□0 (default setting)	Output alarm (A.830) for low battery voltage.	After restart	Setup
	n.□□□1	Output warning (A.930) for low battery voltage.		

- Pn008 = n.□□□0
  The ALM (Servo Alarm) signal is output for up to five seconds when the control power supply is turned ON, and then the battery voltage is monitored for four seconds.
  No alarm will be displayed even if the battery voltage drops below the specified value after these four seconds.
- Pn008 = n.□□□1
  The ALM (Servo Alarm) signal is output for up to five seconds when the control power supply is turned ON, and then the battery voltage is monitored continuously.

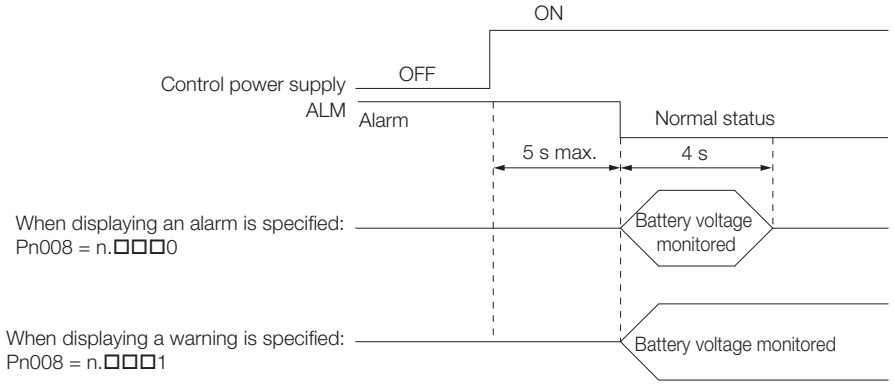

Battery Replacement Procedure

◆ When Installing a Battery on the Host Controller

1. Turn ON only the control power supply to the SERVOPACK.
2. Remove the old battery and mount a new battery.
3. Turn OFF the control power supply to the SERVOPACK to clear the A.830 alarm (Absolute Encoder Battery Error).
4. Turn ON the control power supply to the SERVOPACK again.
5. Make sure that the alarm has been cleared and that the SERVOPACK operates normally.

◆ When Using an Encoder Cable with a Battery Case

1. Turn ON only the control power supply to the SERVOPACK.

> **Important**
> If you remove the Battery or disconnect the Encoder Cable while the control power supply to the SERVOPACK is OFF, the absolute encoder data will be lost.

2. Open the cover of the Battery Case.

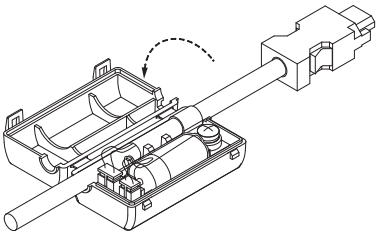

3. Remove the old Battery and mount a new Battery.

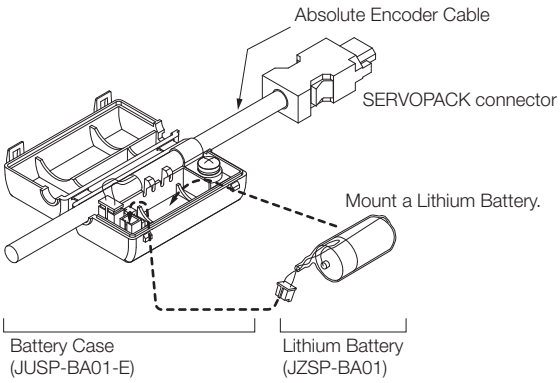

4. Close the cover of the Battery Case.

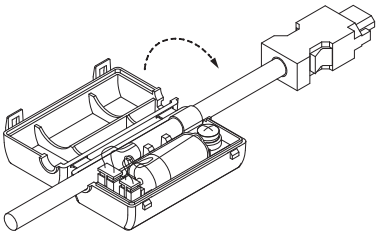

5. Turn OFF the power supply to the SERVOPACK to clear the A.830 alarm (Absolute Encoder Battery Error).
6. Turn ON the power supply to the SERVOPACK.
7. Make sure that the alarm has been cleared and that the SERVOPACK operates normally.

12.2 Alarm Displays

If an error occurs in the SERVOPACK, an alarm number will be displayed on the panel display. However, if □□-□□ appears on the panel display, the display will indicate a SERVOPACK system error. Replace the SERVOPACK.

If there is an alarm, the display will change in the following order.

Example: Alarm A.E60

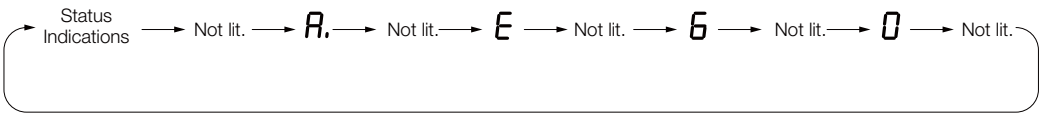

This section provides a list of the alarms that may occur and the causes of and corrections for those alarms.

12.2.1 List of Alarms

The following alarm tables gives the alarm name, alarm meaning, alarm stopping method, and alarm reset possibility in order of the alarm numbers.

Servomotor Stopping Method for Alarms

Refer to the following section for information on the stopping method for alarms.

☞ *5.13.2 Servomotor Stopping Method for Alarms* on page 5-40

Alarm Reset Possibility

Yes: You can use an alarm reset to clear the alarm. However, this assumes that the cause of the alarm has been removed.
No: You cannot clear the alarm.

List of Alarms

Alarm Number	Alarm Name	Alarm Meaning	Servomotor Stopping Method	Alarm Reset Possible?
A.020	Parameter Checksum Error	There is an error in the parameter data in the SERVOPACK.	Gr.1	No
A.021	Parameter Format Error	There is an error in the parameter data format in the SERVOPACK.	Gr.1	No
A.022	System Checksum Error	There is an error in the parameter data in the SERVOPACK.	Gr.1	No
A.024	System Alarm	An internal program error occurred in the SERVOPACK.	Gr.1	No
A.025	System Alarm	An internal program error occurred in the SERVOPACK.	Gr.1	No
A.030	Main Circuit Detector Error	There is an error in the detection data for the main circuit.	Gr.1	Yes
A.040	Parameter Setting Error	A parameter setting is outside of the setting range.	Gr.1	No

Continued on next page.

Continued from previous page.

Alarm Number	Alarm Name	Alarm Meaning	Servo-motor Stop-ping Method	Alarm Reset Possi-ble?
A.041	Encoder Output Pulse Setting Error	The setting of Pn212 (Encoder Output Pulses) or Pn281 (Encoder Output Resolution) is outside of the setting range or does not satisfy the setting conditions.	Gr.1	No
A.042	Parameter Combination Error	The combination of some parameters exceeds the setting range.	Gr.1	No
A.044	Semi-Closed/Fully-Closed Loop Control Parameter Setting Error	The settings of the Option Module and Pn002 = n.X□□□ (External Encoder Usage) do not match.	Gr.1	No
A.04A	Parameter Setting Error 2	There is an error in the bank members or bank data settings.	Gr.1	No
A.050	Combination Error	The capacities of the SERVOPACK and Servomotor do not match.	Gr.1	Yes
A.051	Unsupported Device Alarm	An unsupported device was connected.	Gr.1	No
A.070	Motor Type Change Detected	The connected motor is a different type of motor from the previously connected motor.	Gr.1	No
A.080	Linear Encoder Pitch Setting Error	The setting of Pn282 (Linear Encoder Pitch) has not been changed from the default setting.	Gr.1	No
A.0b0	Invalid Servo ON Command Alarm	The SV_ON (Servo ON) command was sent from the host controller after a utility function that turns ON the Servomotor was executed.	Gr.1	Yes
A.100	Overcurrent Detected	An overcurrent flowed through the power transistor or the heat sink overheated.	Gr.1	No
A.101	Motor Overcurrent Detected	The current to the motor exceeded the allowable current.	Gr.1	No
A.300	Regeneration Error	There is an error related to regeneration.	Gr.1	Yes
A.320	Regenerative Overload	A regenerative overload occurred.	Gr.2	Yes
A.330	Main Circuit Power Supply Wiring Error	• The AC power supply input setting or DC power supply input setting is not correct. • The power supply wiring is not correct.	Gr.1	Yes
A.400	Overvoltage	The main circuit DC voltage is too high.	Gr.1	Yes
A.410	Undervoltage	The main circuit DC voltage is too low.	Gr.2	Yes
A.510	Overspeed	The motor exceeded the maximum speed.	Gr.1	Yes
A.511	Encoder Output Pulse Overspeed	• Rotary Servomotor: The pulse output speed for the setting of Pn212 (Encoder Output Pulses) was exceeded. • Linear Servomotor: The motor speed upper limit for the setting of Pn281 (Encoder Output Resolution) was exceeded.	Gr.1	Yes
A.520	Vibration Alarm	Abnormal oscillation was detected in the motor speed.	Gr.1	Yes
A.521	Autotuning Alarm	Vibration was detected during autotuning for the tuning-less function.	Gr.1	Yes
A.550	Maximum Speed Setting Error	The setting of Pn385 (Maximum Motor Speed) is greater than the maximum motor speed.	Gr.1	Yes
A.710	Instantaneous Overload	The Servomotor was operating for several seconds to several tens of seconds under a torque that largely exceeded the rating.	Gr.2	Yes
A.720	Continuous Overload	The Servomotor was operating continuously under a torque that exceeded the rating.	Gr.1	Yes
A.730	Dynamic Brake Overload	When the dynamic brake was applied, the rotational or linear kinetic energy exceeded the capacity of the dynamic brake resistor.	Gr.1	Yes
A.731				

Continued on next page.

Continued from previous page.

Alarm Number	Alarm Name	Alarm Meaning	Servo-motor Stop-ping Method	Alarm Reset Possi-ble?
A.740	Inrush Current Limiting Resistor Overload	The main circuit power supply was frequently turned ON and OFF.	Gr.1	Yes
A.7A1	Internal Temperature Error 1 (Control Board Tempera-ture Error)	The surrounding temperature of the control PCB is abnormal.	Gr.2	Yes
A.7A2	Internal Temperature Error 2 (Power Board Tempera-ture Error)	The surrounding temperature of the power PCB is abnormal.	Gr.2	Yes
A.7A3	Internal Temperature Sen-sor Error	An error occurred in the temperature sensor cir-cuit.	Gr.2	No
A.7Ab	SERVOPACK Built-in Fan Stopped	The fan inside the SERVOPACK stopped.	Gr.1	Yes
A.810	Encoder Backup Alarm	The power supplies to the encoder all failed and the position data was lost.	Gr.1	No
A.820	Encoder Checksum Alarm	There is an error in the checksum results for encoder memory.	Gr.1	No
A.830	Encoder Battery Alarm	The battery voltage was lower than the specified level after the control power supply was turned ON.	Gr.1	Yes
A.840	Encoder Data Alarm	There is an internal data error in the encoder.	Gr.1	No
A.850	Encoder Overspeed	The encoder was operating at high speed when the power was turned ON.	Gr.1	No
A.860	Encoder Overheated	The internal temperature of encoder is too high.	Gr.1	No
A.861	Motor Overheated	The internal temperature of motor is too high.	Gr.1	No
A.862	Overheat Alarm	The input voltage (temperature) for the overheat protection input (TH) signal exceeded the setting of Pn61B (Overheat Alarm Level).	Gr.1	Yes
A.890	Encoder Scale Error	A failure occurred in the linear encoder.	Gr.1	No
A.891	Encoder Module Error	An error occurred in the linear encoder.	Gr.1	No
A.8A0	External Encoder Error	An error occurred in the external encoder.	Gr.1	Yes
A.8A1	External Encoder Module Error	An error occurred in the Serial Converter Unit.	Gr.1	Yes
A.8A2	External Incremental Encoder Sensor Error	An error occurred in the external encoder.	Gr.1	Yes
A.8A3	External Absolute Encoder Position Error	An error occurred in the position data of the external encoder.	Gr.1	Yes
A.8A5	External Encoder Over-speed	An overspeed error occurred in the external encoder.	Gr.1	Yes
A.8A6	External Encoder Over-heated	An overheating error occurred in the external encoder.	Gr.1	Yes
A.b33	Current Detection Error 3	An error occurred in the current detection circuit.	Gr.1	No
A.b6A	MECHATROLINK Commu-nications ASIC Error 1	ASIC error 1 occurred in MECHATROLINK com-munications.	Gr.1	No
A.b6b	MECHATROLINK Commu-nications ASIC Error 2	ASIC error 2 occurred in MECHATROLINK com-munications.	Gr.2	No
A.bF0	System Alarm 0	Internal program error 0 occurred in the SERVO-PACK.	Gr.1	No
A.bF1	System Alarm 1	Internal program error 1 occurred in the SERVO-PACK.	Gr.1	No
A.bF2	System Alarm 2	Internal program error 2 occurred in the SERVO-PACK.	Gr.1	No

Continued on next page.

Continued from previous page.

Alarm Number	Alarm Name	Alarm Meaning	Servo-motor Stop-ping Method	Alarm Reset Possi-ble?
A.bF3	System Alarm 3	Internal program error 3 occurred in the SERVO-PACK.	Gr.1	No
A.bF4	System Alarm 4	Internal program error 4 occurred in the SERVO-PACK.	Gr.1	No
A.bF5	System Alarm 5	Internal program error 5 occurred in the SERVO-PACK.	Gr.1	No
A.bF6	System Alarm 6	Internal program error 6 occurred in the SERVO-PACK.	Gr.1	No
A.bF7	System Alarm 7	Internal program error 7 occurred in the SERVO-PACK.	Gr.1	No
A.bF8	System Alarm 8	Internal program error 8 occurred in the SERVO-PACK.	Gr.1	No
A.C10	Servomotor Out of Control	The Servomotor ran out of control.	Gr.1	Yes
A.C20	Phase Detection Error	The detection of the phase is not correct.	Gr.1	No
A.C21	Polarity Sensor Error	An error occurred in the polarity sensor.	Gr.1	No
A.C22	Phase Information Dis-agreement	The phase information does not match.	Gr.1	No
A.C50	Polarity Detection Failure	The polarity detection failed.	Gr.1	No
A.C51	Overtravel Detected during Polarity Detection	The overtravel signal was detected during polarity detection.	Gr.1	Yes
A.C52	Polarity Detection Not Completed	The servo was turned ON before the polarity was detected.	Gr.1	Yes
A.C53	Out of Range of Motion for Polarity Detection	The travel distance exceeded the setting of Pn48E (Polarity Detection Range).	Gr.1	No
A.C54	Polarity Detection Failure 2	The polarity detection failed.	Gr.1	No
A.C80	Encoder Clear Error or Multiturn Limit Setting Error	The multiturn data for the absolute encoder was not correctly cleared or set.	Gr.1	No
A.C90	Encoder Communications Error	Communications between the encoder and SER-VOPACK is not possible.	Gr.1	No
A.C91	Encoder Communications Position Data Acceleration Rate Error	An error occurred in calculating the position data of the encoder.	Gr.1	No
A.C92	Encoder Communications Timer Error	An error occurred in the communications timer between the encoder and SERVOPACK.	Gr.1	No
A.CA0	Encoder Parameter Error	The parameters in the encoder are corrupted.	Gr.1	No
A.Cb0	Encoder Echoback Error	The contents of communications with the encoder are incorrect.	Gr.1	No
A.CC0	Multiturn Limit Disagree-ment	Different multiturn limits have been set in the encoder and the SERVOPACK.	Gr.1	No
A.CF1	Reception Failed Error in Feedback Option Module Communications	Receiving data from the Feedback Option Mod-ule failed.	Gr.1	No
A.CF2	Timer Stopped Error in Feedback Option Module Communications	An error occurred in the timer for communica-tions with the Feedback Option Module.	Gr.1	No
A.d00	Position Deviation Over-flow	The setting of Pn520 (Excessive Position Devia-tion Alarm Level) was exceeded by the position deviation while the servo was ON.	Gr.1	Yes

Continued on next page.

Continued from previous page.

Alarm Number	Alarm Name	Alarm Meaning	Servo-motor Stop-ping Method	Alarm Reset Possi-ble?
A.d01	Position Deviation Over-flow Alarm at Servo ON	The servo was turned ON after the position deviation exceeded the setting of Pn526 (Excessive Position Deviation Alarm Level at Servo ON) while the servo was OFF.	Gr.1	Yes
A.d02	Position Deviation Over-flow Alarm for Speed Limit at Servo ON	If position deviation remains in the deviation counter, the setting of Pn529 or Pn584 (Speed Limit Level at Servo ON) limits the speed when the servo is turned ON. This alarm occurs if a position reference is input and the setting of Pn520 (Excessive Position Deviation Alarm Level) is exceeded before the limit is cleared.	Gr.2	Yes
A.d10	Motor-Load Position Devi-ation Overflow	There was too much position deviation between the motor and load during fully-closed loop con-trol.	Gr.2	Yes
A.d30	Position Data Overflow	The position feedback data exceeded ±1,879,048,192.	Gr.1	No
A.E02	MECHATROLINK Internal Synchronization Error 1	A synchronization error occurred during MECHA-TROLINK communications with the SERVO-PACK.	Gr.1	Yes
A.E40	MECHATROLINK Trans-mission Cycle Setting Error	The setting of the MECHATROLINK communica-tions transmission cycle is not correct.	Gr.2	Yes
A.E41	MECHATROLINK Commu-nications Data Size Set-ting Error	The setting of the MECHATROLINK communica-tions data size is not correct.	Gr.2	Yes
A.E42	MECHATROLINK Station Address Setting Error	The setting of the MECHATROLINK station address is not correct.	Gr.2	No
A.E50*	MECHATROLINK Syn-chronization Error	A synchronization error occurred during MECHA-TROLINK communications.	Gr.2	Yes
A.E51	MECHATROLINK Syn-chronization Failed	Synchronization failed during MECHATROLINK communications.	Gr.2	Yes
A.E60*	Reception Error in MECHATROLINK Commu-nications	Communications errors occurred continuously during MECHATROLINK communications.	Gr.2	Yes
A.E61	Synchronization Interval Error in MECHATROLINK Transmission Cycle	An error occurred in the transmission cycle during MECHATROLINK communications.	Gr.2	Yes
A.E63	MECHATROLINK Syn-chronization Frame Not Received	Synchronization frames were continuously not received during MECHATROLINK communica-tions.	Gr.2	Yes
A.E71	Safety Option Module Detection Failure	Detection of the Safety Option Module failed.	Gr.1	No
A.E72	Feedback Option Module Detection Failure	Detection of the Feedback Option Module failed.	Gr.1	No
A.E74	Unsupported Safety Option Module Alarm	An unsupported Safety Option Module was con-nected.	Gr.1	No
A.Eb1	Safety Function Signal Input Timing Error	An error occurred in the input timing of the safety function signal.	Gr.1	No
A.EC8	Gate Drive Error 1	An error occurred in the gate drive circuit.	Gr.1	No
A.EC9	Gate Drive Error 2	An error occurred in the gate drive circuit.	Gr.1	No
A.Ed1	Command Execution Tim-eout	A timeout error occurred for a MECHATROLINK command.	Gr.2	Yes

Continued on next page.

Continued from previous page.

Alarm Number	Alarm Name	Alarm Meaning	Servo-motor Stop-ping Method	Alarm Reset Possi-ble?
A.F10	Power Supply Line Open Phase	The voltage was low for more than one second for phase R, S, or T when the main power supply was ON.	Gr.2	Yes
FL-1*	System Alarm	An internal program error occurred in the SERVOPACK.	–	No
FL-2*				
FL-3*				
FL-4*				
FL-5*				
FL-6*				
CPF00	Digital Operator Communications Error 1	Communications were not possible between the Digital Operator (model: JUSP-OP05A-1-E) and the SERVOPACK (e.g., a CPU error occurred).	–	No
CPF01	Digital Operator Communications Error 2			

* These alarms are not stored in the alarm history. They are only displayed on the panel display.

Note: The A.Eb0, A.Eb2 to A.Eb9, and A.EC0 to A.EC2 alarms can occur when a Safety Module is connected.
Refer to the following manual for details.
AC Servo Drive Σ-V-Series/Σ-V-Series for Large-Capacity Models/Σ-7-Series User's Manual Safety Module (Manual No.: SIEP C720829 06)

12.2.2 Troubleshooting Alarms

The causes of and corrections for the alarms are given in the following table. Contact your Yaskawa representative if you cannot solve a problem with the correction given in the table.

Alarm Number: Alarm Name	Possible Cause	Confirmation	Correction	Reference
A.020: Parameter Checksum Error (There is an error in the parameter data in the SERVOPACK.)	The power supply voltage suddenly dropped.	Measure the power supply voltage.	Set the power supply voltage within the specified range, and initialize the parameter settings.	page 5-11
	The power supply was shut OFF while writing parameter settings.	Check the timing of shutting OFF the power supply.	Initialize the parameter settings and then set the parameters again.	
	The number of times that parameters were written exceeded the limit.	Check to see if the parameters were frequently changed from the host controller.	The SERVOPACK may be faulty. Replace the SERVOPACK. Reconsider the method for writing the parameters.	–
	A malfunction was caused by noise from the AC power supply, ground, static electricity, or other source.	Turn the power supply to the SERVOPACK OFF and ON again. If the alarm still occurs, noise may be the cause.	Implement countermeasures against noise.	page 4-5
	Gas, water drops, or cutting oil entered the SERVOPACK and caused failure of the internal components.	Check the installation conditions.	The SERVOPACK may be faulty. Replace the SERVOPACK.	–
	A failure occurred in the SERVOPACK.	Turn the power supply to the SERVOPACK OFF and ON again. If the alarm still occurs, the SERVOPACK may have failed.	The SERVOPACK may be faulty. Replace the SERVOPACK.	–
A.021: Parameter Format Error (There is an error in the parameter data format in the SERVOPACK.)	The software version of the SERVOPACK that caused the alarm is older than the software version of the parameters specified to write.	Read the product information to see if the software versions are the same. If they are different, it could be the cause of the alarm.	Write the parameters from another SERVOPACK with the same model and the same software version, and then turn the power OFF and ON again.	page 9-2
	A failure occurred in the SERVOPACK.	–	The SERVOPACK may be faulty. Replace the SERVOPACK.	–
A.022: System Checksum Error (There is an error in the parameter data in the SERVOPACK.)	The power supply voltage suddenly dropped.	Measure the power supply voltage.	The SERVOPACK may be faulty. Replace the SERVOPACK.	–
	The power supply was shut OFF while setting a utility function.	Check the timing of shutting OFF the power supply.	The SERVOPACK may be faulty. Replace the SERVOPACK.	–
	A failure occurred in the SERVOPACK.	Turn the power supply to the SERVOPACK OFF and ON again. If the alarm still occurs, the SERVOPACK may have failed.	The SERVOPACK may be faulty. Replace the SERVOPACK.	–

Continued on next page.

Continued from previous page.

Alarm Number: Alarm Name	Possible Cause	Confirmation	Correction	Reference
A.024: System Alarm (An internal program error occurred in the SERVOPACK.)	A failure occurred in the SERVOPACK.	–	The SERVOPACK may be faulty. Replace the SERVOPACK.	–
A.025: System Alarm (An internal program error occurred in the SERVOPACK.)	A failure occurred in the SERVOPACK.	–	The SERVOPACK may be faulty. Replace the SERVOPACK.	–
A.030: Main Circuit Detector Error	A failure occurred in the SERVOPACK.	–	The SERVOPACK may be faulty. Replace the SERVOPACK.	–
A.040: Parameter Setting Error (A parameter setting is outside of the setting range.)	The SERVOPACK and Servomotor capacities do not match each other.	Check the combination of the SERVOPACK and Servomotor capacities.	Select a proper combination of SERVOPACK and Servomotor capacities.	page 1-8
	A failure occurred in the SERVOPACK.	–	The SERVOPACK may be faulty. Replace the SERVOPACK.	–
	A parameter setting is outside of the setting range.	Check the setting ranges of the parameters that have been changed.	Set the parameters to values within the setting ranges.	–
	The electronic gear ratio is outside of the setting range.	Check the electronic gear ratio. The ratio must be within the following range: 0.001 < (Pn20E/Pn210) < 64,000.	Set the electronic gear ratio in the following range: 0.001 < (Pn20E/Pn210) < 64,000.	page 5-45
A.041: Encoder Output Pulse Setting Error	The setting of Pn212 (Encoder Output Pulses) or Pn281 (Encoder Output Resolution) is outside of the setting range or does not satisfy the setting conditions.	Check the setting of Pn212 or Pn281.	Set Pn212 or Pn281 to an appropriate value.	page 6-20
A.042: Parameter Combination Error	The speed of program jogging went below the setting range when the electronic gear ratio (Pn20E/Pn210) or the Servomotor was changed.	Check to see if the detection conditions*1 are satisfied.	Decrease the setting of the electronic gear ratio (Pn20E/Pn210).	page 5-45
	The speed of program jogging went below the setting range when Pn533 or Pn585 (Program Jogging Speed) was changed.	Check to see if the detection conditions*1 are satisfied.	Increase the setting of Pn533 or Pn585.	page 7-14
	The movement speed of advanced autotuning went below the setting range when the electronic gear ratio (Pn20E/ Pn210) or the Servomotor was changed.	Check to see if the detection conditions*2 are satisfied.	Decrease the setting of the electronic gear ratio (Pn20E/Pn210).	page 5-45

Continued on next page.

Continued from previous page.

Alarm Number: Alarm Name	Possible Cause	Confirmation	Correction	Reference
A.044: Semi-Closed/ Fully-Closed Loop Control Parameter Setting Error	The setting of the Fully-closed Module does not match the setting of Pn002 = n.X□□□ (External Encoder Usage).	Check the setting of Pn002 = n.X□□□.	Make sure that the setting of the Fully-closed Module agrees with the setting of Pn002 = n.X□□□.	page 10-6
A.04A: Parameter Setting Error 2	For 4-byte parameter bank members, there are two consecutive members with nothing registered.	–	Change the number of bytes for bank members to an appropriate value.	–
	The total amount of bank data exceeds 64 (Pn900 × Pn901 > 64).	–	Reduce the total amount of bank data to 64 or less.	–
A.050: Combination Error (The capacities of the SERVOPACK and Servomotor do not match.)	The SERVOPACK and Servomotor capacities do not match each other.	Confirm that the following condition is met: 1/4 ≤ (Servomotor capacity/SERVOPACK capacity) ≤ 4	Select a proper combination of the SERVOPACK and Servomotor capacities.	page 1-8
	A failure occurred in the encoder.	Replace the encoder and check to see if the alarm still occurs.	Replace the Servomotor or encoder.	–
	A failure occurred in the SERVOPACK.	–	The SERVOPACK may be faulty. Replace the SERVOPACK.	–
A.051: Unsupported Device Alarm	The motor parameter file was not written to the linear encoder. (This applies only when not using a Serial Converter Unit.)	Check to see if the motor parameter file was written to the linear encoder.	Write the motor parameter file to the linear encoder.	page 5-19
	An unsupported Serial Converter Unit or encoder (e.g., an external encoder) is connected to the SERVOPACK.	Check the product combination specifications.	Change to a correct combination of models.	–
A.070: Motor Type Change Detected (The connected motor is a different type of motor from the previously connected motor.)	A Rotary Servomotor was removed and a Linear Servomotor was connected.	–	Set the parameters for a Linear Servomotor and reset the motor type alarm. Then, turn the power supply to the SERVOPACK OFF and ON again.	page 12-47
	A Linear Servomotor was removed and a Rotary Servomotor was connected.	–	Set the parameters for a Rotary Servomotor and reset the motor type alarm. Then, turn the power supply to the SERVOPACK OFF and ON again.	page 12-47
A.080: Linear Encoder Pitch Setting Error	The setting of Pn282 (Linear Encoder Pitch) has not been changed from the default setting.	Check the setting of Pn282.	Correct the setting of Pn282.	page 5-18

Continued on next page.

Continued from previous page.

Alarm Number: Alarm Name	Possible Cause	Confirmation	Correction	Reference
A.0b0: Invalid Servo ON Command Alarm	The SV_ON (Servo ON) command was sent from the host controller after a utility function that turns ON the Servomotor was executed.	–	Turn the power supply to the SERVOPACK OFF and ON again. Or, execute a software reset.	page 6-48
A.100: Overcurrent Detected (An overcurrent flowed through the power transistor or the heat sink overheated.)	The Main Circuit Cable is not wired correctly or there is faulty contact.	Check the wiring.	Correct the wiring.	page 4-25
	There is a short-circuit or ground fault in a Main Circuit Cable.	Check for short-circuits across Servomotor phases U, V, and W, or between the ground and Servomotor phases U, V, and W.	The cable may be short-circuited. Replace the cable.	
	There is a short-circuit or ground fault inside the Servomotor.	Check for short-circuits across Servomotor phases U, V, and W, or between the ground and Servomotor phases U, V, or W.	The Servomotor may be faulty. Replace the Servomotor.	
	There is a short-circuit or ground fault inside the SERVOPACK.	Check for short-circuits across the Servomotor connection terminals U, V, and W on the SERVOPACK, or between the ground and terminals U, V, or W.	The SERVOPACK may be faulty. Replace the SERVOPACK.	
	The regenerative resistor is not wired correctly or there is faulty contact.	Check the wiring.	Correct the wiring.	page 4-21
	The dynamic brake (DB, emergency stop executed from the SERVOPACK) was frequently activated, or a DB overload alarm occurred.	Check the power consumed by the DB resistor to see how frequently the DB is being used. Or, check the alarm display to see if a DB overload alarm (A.730 or A.731) has occurred.	Change the SERVOPACK model, operating methods, or the mechanisms so that the dynamic brake does not need to be used so frequently.	–

Continued on next page.

Continued from previous page.

Alarm Number: Alarm Name	Possible Cause	Confirmation	Correction	Reference
A.100: Overcurrent Detected (An overcurrent flowed through the power transistor or the heat sink overheated.)	The regenerative processing capacity was exceeded.	Check the regenerative load ratio in the SigmaWin+ Motion Monitor Tab Page to see how frequently the regenerative resistor is being used.	Recheck the operating conditions and load.	*3
	The SERVOPACK regenerative resistance is too small.	Check the regenerative load ratio in the SigmaWin+ Motion Monitor Tab Page to see how frequently the regenerative resistor is being used.	Change the regenerative resistance to a value larger than the SERVOPACK minimum allowable resistance.	
	A heavy load was applied while the Servomotor was stopped or running at a low speed.	Check to see if the operating conditions exceed Servo Drive specifications.	Reduce the load applied to the Servomotor. Or, increase the operating speed.	–
	A malfunction was caused by noise.	Improve the noise environment, e.g. by improving the wiring or installation conditions, and check to see if the alarm still occurs.	Implement countermeasures against noise, such as correct wiring of the FG. Use an FG wire size equivalent to the SERVOPACK's main circuit wire size.	–
	A failure occurred in the SERVOPACK.	–	Turn the power supply to the SERVOPACK OFF and ON again. If the alarm still occurs, the SERVOPACK may be faulty. Replace the SERVOPACK.	–
A.101: Motor Overcurrent Detected (The current to the motor exceeded the allowable current.)	The Main Circuit Cable is not wired correctly or there is faulty contact.	Check the wiring.	Correct the wiring.	page 4-25
	There is a short-circuit or ground fault in a Main Circuit Cable.	Check for short-circuits across cable phases U, V, and W, or between the ground and cable phases U, V, and W.	The cable may be short-circuited. Replace the cable.	
	There is a short-circuit or ground fault inside the Servomotor.	Check for short-circuits across Servomotor phases U, V, and W, or between the ground and Servomotor phases U, V, or W.	The Servomotor may be faulty. Replace the Servomotor.	
	There is a short-circuit or ground fault inside the SERVOPACK.	Check for short-circuits across the Servomotor connection terminals U, V, and W on the SERVOPACK, or between the ground and terminals U, V, or W.	The SERVOPACK may be faulty. Replace the SERVOPACK.	
	A heavy load was applied while the Servomotor was stopped or running at a low speed.	Check to see if the operating conditions exceed Servo Drive specifications.	Reduce the load applied to the Servomotor. Or, increase the operating speed.	–

Continued on next page.

Continued from previous page.

Alarm Number: Alarm Name	Possible Cause	Confirmation	Correction	Reference
A.101: Motor Overcurrent Detected (The current to the motor exceeded the allowable current.)	A malfunction was caused by noise.	Improve the noise environment, e.g. by improving the wiring or installation conditions, and check to see if the alarm still occurs.	Implement countermeasures against noise, such as correct wiring of the FG. Use an FG wire size equivalent to the SERVOPACK's main circuit wire size.	–
	A failure occurred in the SERVOPACK.	–	Turn the power supply to the SERVOPACK OFF and ON again. If the alarm still occurs, the SERVOPACK may be faulty. Replace the SERVOPACK.	–
A.300: Regeneration Error	When using the built-in regenerative resistor, the jumper between the regenerative resistor terminals (B2 and B3) was removed from one of the following SERVOPACKs: SGD7S-3R8A, -5R5A, -7R6A, -120A, -180A, -200A, or -330A.	Check to see if the jumper is connected between power supply terminals B2 and B3.*4	Correctly connect a jumper.	page 4-22
	The External Regenerative Resistor or Regenerative Resistor Unit is not wired correctly, or was removed or disconnected.	Check the wiring of the External Regenerative Resistor or Regenerative Resistor Unit.*4	Correct the wiring of the External Regenerative Resistor or Regenerative Resistor Unit.	
	Pn600 (Regenerative Resistor Capacity) is not set to 0 and an External Regenerative Resistor is not connected to one of the following SERVOPACKs: SGD7S-R70A, -R90A, -1R6A, -2R8A, -R70F, -R90F, -2R1F, or -2R8F.	Check to see if an External Regenerative Resistor is connected and check the setting of Pn600.	Connect an External Regenerative Resistor, or set Pn600 (Regenerative Resistor Capacity) to 0 (setting unit: × 10 W) if no Regenerative Resistor is required.	page 5-56
	An External Regenerative Resistor is not connected to one of the following SERVOPACKs: SGD7S-470A, -550A, -590A, or -780A.	Check to see if an External Regenerative Resistor or a Regenerative Resistor Unit is connected and check the setting of Pn600.	Connect an External Regenerative Resistor and set Pn600 to an appropriate value, or connect a Regenerative Resistor Unit and set Pn600 to 0.	
	A failure occurred in the SERVOPACK.	–	While the main circuit power supply is OFF, turn the control power supply to the SERVOPACK OFF and ON again. If the alarm still occurs, the SERVOPACK may be faulty. Replace the SERVOPACK.	–

Continued on next page.

Continued from previous page.

Alarm Number: Alarm Name	Possible Cause	Confirmation	Correction	Reference
A.320: Regenerative Overload	The power supply voltage exceeded the specified range.	Measure the power supply voltage.	Set the power supply voltage within the specified range.	–
	The external regenerative resistance value or regenerative resistor capacity is too small, or there has been a continuous regeneration state.	Check the operating conditions or the capacity.	Change the regenerative resistance value or capacity. Reconsider the operating conditions.	*3
	There was a continuous regeneration state because a negative load was continuously applied.	Check the load applied to the Servomotor during operation.	Reconsider the system including the servo, machine, and operating conditions.	–
	The setting of Pn600 (Regenerative Resistor Capacity) is smaller than the capacity of the External Regenerative Resistor.	Check to see if a Regenerative Resistor is connected and check the setting of Pn600.	Correct the setting of Pn600.	page 5-56
	The setting of Pn603 (Regenerative Resistor Capacity) is smaller than the capacity of the External Regenerative Resistor.	Check to see if a Regenerative Resistor is connected and check the setting of Pn603.	Correct the setting of Pn603.	page 5-56
	The external regenerative resistance is too high.	Check the regenerative resistance.	Change the regenerative resistance to a correct value or use an External Regenerative Resistor of an appropriate capacity.	*3
	A failure occurred in the SERVOPACK.	–	The SERVOPACK may be faulty. Replace the SERVOPACK.	–

Continued on next page.

Continued from previous page.

Alarm Number: Alarm Name	Possible Cause	Confirmation	Correction	Reference
A.330: Main Circuit Power Supply Wiring Error (Detected when the main circuit power supply is turned ON.)	The regenerative resistor was disconnected when the SERVOPACK power supply voltage was high.	Measure the resistance of the regenerative resistor using a measuring instrument.	If you are using the regenerative resistor built into the SERVOPACK, replace the SERVOPACK. If you are using an External Regenerative Resistor, replace the External Regenerative Resistor.	–
	DC power was supplied when an AC power supply input was specified in the settings.	Check the power supply to see if it is a DC power supply.	Correct the power supply setting to match the actual power supply.	page 5-14
	AC power was supplied when a DC power supply input was specified in the settings.	Check the power supply to see if it is an AC power supply.	Correct the power supply setting to match the actual power supply.	
	Pn600 (Regenerative Resistor Capacity) is not set to 0 and an External Regenerative Resistor is not connected to one of the following SERVOPACKs: SGD7S-R70A, -R90A, -1R6A, -2R8A, -R70F, -R90F, -2R1F, or -2R8F.	Check to see if an External Regenerative Resistor is connected and check the setting of Pn600.	Connect an External Regenerative Resistor, or if an External Regenerative Resistor is not required, set Pn600 to 0.	page 4-21, page 5-56
	A failure occurred in the SERVOPACK.	–	The SERVOPACK may be faulty. Replace the SERVOPACK.	–

Continued on next page.

Continued from previous page.

Alarm Number: Alarm Name	Possible Cause	Confirmation	Correction	Reference
A.400: Overvoltage (Detected in the main circuit power supply section of the SERVOPACK.)	The power supply voltage exceeded the specified range.	Measure the power supply voltage.	Set the AC/DC power supply voltage within the specified range.	–
	The power supply is not stable or was influenced by a lightning surge.	Measure the power supply voltage.	Improve the power supply conditions, install a surge absorber, and then turn the power supply OFF and ON again. If the alarm still occurs, the SERVOPACK may be faulty. Replace the SERVOPACK.	–
	The voltage for AC power supply was too high during acceleration or deceleration.	Check the power supply voltage and the speed and torque during operation.	Set the AC power supply voltage within the specified range.	–
	The external regenerative resistance is too high for the operating conditions.	Check the operating conditions and the regenerative resistance.	Select a regenerative resistance value that is appropriate for the operating conditions and load.	*3
	The moment of inertia ratio or mass ratio exceeded the allowable value.	Check to see if the moment of inertia ratio or mass ratio is within the allowable range.	Increase the deceleration time, or reduce the load.	–
	A failure occurred in the SERVOPACK.	–	While the main circuit power supply is OFF, turn the control power supply to the SERVOPACK OFF and ON again. If the alarm still occurs, the SERVOPACK may be faulty. Replace the SERVOPACK.	–
A.410: Undervoltage (Detected in the main circuit power supply section of the SERVOPACK.)	The power supply voltage went below the specified range.	Measure the power supply voltage.	Set the power supply voltage within the specified range.	–
	The power supply voltage dropped during operation.	Measure the power supply voltage.	Increase the power supply capacity.	–
	A momentary power interruption occurred.	Measure the power supply voltage.	If you have changed the setting of Pn509 (Momentary Power Interruption Hold Time), decrease the setting.	page 6-16
	The SERVOPACK fuse is blown out.	–	Replace the SERVOPACK and connect a reactor to the DC reactor terminals (⊖1 and ⊖2) on the SERVOPACK.	–
	A failure occurred in the SERVOPACK.	–	The SERVOPACK may be faulty. Replace the SERVOPACK.	–

Continued on next page.

Continued from previous page.

Alarm Number: Alarm Name	Possible Cause	Confirmation	Correction	Reference
A.510: Overspeed (The motor exceeded the maximum speed.)	The order of phases U, V, and W in the motor wiring is not correct.	Check the wiring of the Servomotor.	Make sure that the Servomotor is correctly wired.	–
	A reference value that exceeded the overspeed detection level was input.	Check the input reference.	Reduce the reference value. Or, adjust the gain.	–
	The motor exceeded the maximum speed.	Check the waveform of the motor speed.	Reduce the speed reference input gain and adjust the servo gain. Or, reconsider the operating conditions.	
	A failure occurred in the SERVOPACK.	–	The SERVOPACK may be faulty. Replace the SERVOPACK.	–
A.511: Encoder Output Pulse Overspeed	The encoder output pulse frequency exceeded the limit.	Check the encoder output pulse setting.	Decrease the setting of Pn212 (Encoder Output Pulses) or Pn281 (Encoder Output Resolution).	page 6-25
	The encoder output pulse frequency exceeded the limit because the motor speed was too high.	Check the encoder output pulse setting and the motor speed.	Reduce the motor speed.	–
A.520: Vibration Alarm	Abnormal oscillation was detected in the motor speed.	Check for abnormal motor noise, and check the speed and torque waveforms during operation.	Reduce the motor speed. Or, reduce the setting of Pn100 (Speed Loop Gain).	page 8-81
	The setting of Pn103 (Moment of Inertia Ratio) is greater than the actual moment of inertia or was greatly changed.	Check the moment of inertia ratio or mass ratio.	Set Pn103 (Moment of Inertia Ratio) to an appropriate value.	page 8-16
	The vibration detection level (Pn312 or Pn384) is not suitable.	Check that the vibration detection level (Pn312 or Pn384) is suitable.	Set a suitable vibration detection level (Pn312 or Pn384).	page 6-51
A.521: Autotuning Alarm (Vibration was detected while executing the custom tuning, Easy FFT, or the tuning-less function.)	The Servomotor vibrated considerably while performing the tuning-less function.	Check the waveform of the motor speed.	Reduce the load so that the moment of inertia ratio is within the allowable value. Or increase the load level or reduce the rigidity level in the tuning-less level settings.	page 8-13
	The Servomotor vibrated considerably while performing custom tuning or Easy FFT.	Check the waveform of the motor speed.	Check the operating procedure of corresponding function and implement corrections.	page 8-42, page 8-97
A.550: Maximum Speed Setting Error	The setting of Pn385 (Maximum Motor Speed) is greater than the maximum speed.	Check the setting of Pn385, and the upper limits of the maximum motor speed setting and the encoder output resolution setting.	Set Pn385 to a value that does not exceed the maximum motor speed.	page 6-19

Continued on next page.

Continued from previous page.

Alarm Number: Alarm Name	Possible Cause	Confirmation	Correction	Reference
A.710: Instantaneous Overload A.720: Continuous Overload	The wiring is not correct or there is a faulty connection in the motor or encoder wiring.	Check the wiring.	Make sure that the Servomotor and encoder are correctly wired.	page 4-25
	Operation was performed that exceeded the overload protection characteristics.	Check the motor overload characteristics and Run command.	Reconsider the load and operating conditions. Or, increase the motor capacity.	–
	An excessive load was applied during operation because the Servomotor was not driven due to mechanical problems.	Check the operation reference and motor speed.	Correct the mechanical problem.	–
	There is an error in the setting of Pn282 (Linear Encoder Pitch).	Check the setting of Pn282.	Correct the setting of Pn282.	page 5-18
	There is an error in the setting of Pn080 = n.□□X□ (Motor Phase Selection).	Check the setting of Pn080 = n.□□X□.	Set Pn080 = n.□□X□ to an appropriate value.	page 5-23
	A failure occurred in the SERVOPACK.	–	The SERVOPACK may be faulty. Replace the SERVOPACK.	–
A.730 and A.731: Dynamic Brake Overload (An excessive power consumption by the dynamic brake was detected.)	The Servomotor was rotated by an external force.	Check the operation status.	Implement measures to ensure that the motor will not be rotated by an external force.	–
	When the Servomotor was stopped with the dynamic brake, the rotational or linear kinetic energy exceeded the capacity of the dynamic brake resistor.	Check the power consumed by the DB resistor to see how frequently the DB is being used.	Reconsider the following: • Reduce the Servomotor command speed. • Decrease the moment of inertia ratio or mass ratio. • Reduce the frequency of stopping with the dynamic brake.	–
	A failure occurred in the SERVOPACK.	–	The SERVOPACK may be faulty. Replace the SERVOPACK.	–
A.740: Inrush Current Limiting Resistor Overload (The main circuit power supply was frequently turned ON and OFF.)	The allowable frequency of the inrush current limiting resistor was exceeded when the main circuit power supply was turned ON and OFF.	–	Reduce the frequency of turning the main circuit power supply ON and OFF.	–
	A failure occurred in the SERVOPACK.	–	The SERVOPACK may be faulty. Replace the SERVOPACK.	–

Continued on next page.

Continued from previous page.

Alarm Number: Alarm Name	Possible Cause	Confirmation	Correction	Reference
A.7A1: Internal Temperature Error 1 (Control Board Temperature Error)	The surrounding temperature is too high.	Check the surrounding temperature using a thermometer. Or, check the operating status with the SERVOPACK installation environment monitor.	Decrease the surrounding temperature by improving the SERVOPACK installation conditions.	page 3-7
	An overload alarm was reset by turning OFF the power supply too many times.	Check the alarm display to see if there is an overload alarm.	Change the method for resetting the alarm.	–
	There was an excessive load or operation was performed that exceeded the regenerative processing capacity.	Use the accumulated load ratio to check the load during operation, and use the regenerative load ratio to check the regenerative processing capacity.	Reconsider the load and operating conditions.	–
	The SERVOPACK installation orientation is not correct or there is insufficient space around the SERVOPACK.	Check the SERVOPACK installation conditions.	Install the SERVOPACK according to specifications.	page 3-3, page 3-6
	A failure occurred in the SERVOPACK.	–	The SERVOPACK may be faulty. Replace the SERVOPACK.	–
A.7A2: Internal Temperature Error 2 (Power Board Temperature Error)	The surrounding temperature is too high.	Check the surrounding temperature using a thermometer. Or, check the operating status with the SERVOPACK installation environment monitor.	Decrease the surrounding temperature by improving the SERVOPACK installation conditions.	page 3-7
	An overload alarm was reset by turning OFF the power supply too many times.	Check the alarm display to see if there is an overload alarm.	Change the method for resetting the alarm.	–
	There was an excessive load or operation was performed that exceeded the regenerative processing capacity.	Use the accumulated load ratio to check the load during operation, and use the regenerative load ratio to check the regenerative processing capacity.	Reconsider the load and operating conditions.	–
	The SERVOPACK installation orientation is not correct or there is insufficient space around the SERVOPACK.	Check the SERVOPACK installation conditions.	Install the SERVOPACK according to specifications.	page 3-3, page 3-6
	A failure occurred in the SERVOPACK.	–	The SERVOPACK may be faulty. Replace the SERVOPACK.	–
A.7A3: Internal Temperature Sensor Error (An error occurred in the temperature sensor circuit.)	A failure occurred in the SERVOPACK.	–	The SERVOPACK may be faulty. Replace the SERVOPACK.	–

Continued on next page.

Continued from previous page.

Alarm Number: Alarm Name	Possible Cause	Confirmation	Correction	Reference
A.7Ab: SERVOPACK Built-in Fan Stopped	The fan inside the SERVOPACK stopped.	Check for foreign matter inside the SERVOPACK.	Remove foreign matter from the SERVOPACK. If the alarm still occurs, the SERVOPACK may be faulty. Replace the SERVOPACK.	–
A.810: Encoder Backup Alarm (Detected at the encoder, but only when an absolute encoder is used.)	The power to the absolute encoder was turned ON for the first time.	Check to see if the power supply was turned ON for the first time.	Set up the encoder.	page 5-50
	The Encoder Cable was disconnected and then connected again.	Check to see if the power supply was turned ON for the first time.	Check the encoder connection and set up the encoder.	
	Power is not being supplied both from the control power supply (+5 V) from the SERVOPACK and from the battery power supply.	Check the encoder connector battery and the connector status.	Replace the battery or implement similar measures to supply power to the encoder, and set up the encoder.	
	A failure occurred in the absolute encoder.	–	If the alarm still occurs after setting up the encoder again, replace the Servomotor.	–
	A failure occurred in the SERVOPACK.	–	The SERVOPACK may be faulty. Replace the SERVOPACK.	–
A.820: Encoder Checksum Alarm (Detected at the encoder.)	A failure occurred in the encoder.	–	■ When Using an Absolute Encoder Set up the encoder again. If the alarm still occurs, the Servomotor may be faulty. Replace the Servomotor. ■ When Using a Single-turn Absolute Encoder or Incremental Encoder • The Servomotor may be faulty. Replace the Servomotor. • The linear encoder may be faulty. Replace the linear encoder.	page 5-50
	A failure occurred in the SERVOPACK.	–	The SERVOPACK may be faulty. Replace the SERVOPACK.	–
A.830: Encoder Battery Alarm (The absolute encoder battery voltage was lower than the specified level.)	The battery connection is faulty or a battery is not connected.	Check the battery connection.	Correct the battery connection.	page 4-26
	The battery voltage is lower than the specified value (2.7 V).	Measure the battery voltage.	Replace the battery.	page 12-3
	A failure occurred in the SERVOPACK.	–	The SERVOPACK may be faulty. Replace the SERVOPACK.	–

Continued on next page.

Continued from previous page.

Alarm Number: Alarm Name	Possible Cause	Confirmation	Correction	Reference
A.840: Encoder Data Alarm (Detected at the encoder.)	The encoder malfunctioned.	–	Turn the power supply to the SERVOPACK OFF and ON again. If the alarm still occurs, the Servomotor or linear encoder may be faulty. Replace the Servomotor or linear encoder.	–
	An error occurred in reading data from the linear encoder.	–	The linear encoder is not mounted within an appropriate tolerance. Correct the mounting of the linear encoder.	–
	Excessive speed occurred in the linear encoder.	–	Control the motor speed within the range specified by the linear encoder manufacturer and then turn ON the control power supply.	–
	The encoder malfunctioned due to noise.	–	Correct the wiring around the encoder by separating the Encoder Cable from the Servomotor Main Circuit Cable or by grounding the encoder.	–
	The polarity sensor is not wired correctly.	Check the wiring of the polarity sensor.	Correct the wiring of the polarity sensor.	–
	The polarity sensor failed.	–	Replace the polarity sensor.	–
A.850: Encoder Overspeed (Detected at the encoder when the control power supply is turned ON.)	Rotary Servomotor: The Servomotor speed was 200 min^{-1} or higher when the control power supply was turned ON.	Check the motor speed when the power supply is turned ON.	Reduce the Servomotor speed to a value less than 200 min^{-1}, and turn ON the control power supply.	–
	Linear Servomotor: The Servomotor exceeded the specified speed when the control power supply was turned ON.	Check the motor speed when the power supply is turned ON.	Control the motor speed within the range specified by the linear encoder manufacturer and then turn ON the control power supply.	–
	A failure occurred in the encoder.	–	Turn the power supply to the SERVOPACK OFF and ON again. If the alarm still occurs, the Servomotor or linear encoder may be faulty. Replace the Servomotor or linear encoder.	–
	A failure occurred in the SERVOPACK.	–	Turn the power supply to the SERVOPACK OFF and ON again. If the alarm still occurs, the SERVOPACK may be faulty. Replace the SERVOPACK.	–

Continued on next page.

Continued from previous page.

Alarm Number: Alarm Name	Possible Cause	Confirmation	Correction	Reference
A.860: Encoder Overheated (Detected when a Rotary Servomotor, Absolute Linear Encoder, or Direct Drive Servomotor is connected. However, this does not apply to SGMCS Servomotor with Incremental Encoders.) (Detected at the encoder.)	The surrounding air temperature around the Servomotor is too high.	Measure the surrounding air temperature around the Servomotor.	Reduce the surrounding air temperature of the Servomotor to 40°C or less.	–
	The Servomotor load is greater than the rated load.	Use the accumulated load ratio to check the load.	Operate the Servo Drive so that the motor load remains within the specified range.	page 9-3
	A failure occurred in the encoder.	–	Turn the power supply to the SERVOPACK OFF and ON again. If the alarm still occurs, the Servomotor or absolute linear encoder may be faulty. Replace the Servomotor or absolute linear encoder.	–
	A failure occurred in the SERVOPACK.	–	Turn the power supply to the SERVOPACK OFF and ON again. If the alarm still occurs, the SERVOPACK may be faulty. Replace the SERVOPACK.	–
A.861: Motor Overheated	The surrounding temperature around the Servomotor is too high.	Measure the surrounding temperature around the Servomotor.	Reduce the surrounding air temperature of the Servomotor to 40°C or less.	–
	The motor load is greater than the rated load.	Check the load with the accumulated load ratio on the Motion Monitor Tab Page on the SigmaWin+.	Operate the Servo Drive so that the motor load remains within the specified range.	page 9-3
	A failure occurred in the Serial Converter Unit.	–	Turn the power supply to the SERVOPACK OFF and ON again. If the alarm still occurs, the Serial Converter Unit may be faulty. Replace the Serial Converter Unit.	–
	A failure occurred in the SERVOPACK.	–	Turn the power supply to the SERVOPACK OFF and ON again. If the alarm still occurs, the SERVOPACK may be faulty. Replace the SERVOPACK.	–

Continued on next page.

Continued from previous page.

Alarm Number: Alarm Name	Possible Cause	Confirmation	Correction	Reference
A.862: Overheat Alarm	The surrounding temperature is too high.	Check the surrounding temperature using a thermometer.	Lower the surrounding temperature by improving the installation conditions of the Linear Servomotor or the machine.	–
	The overheat protection input signal line is disconnected or short-circuited.	Check the input voltage with the overheat protection input information on the Motion Monitor Tab Page on the SigmaWin+.	Repair the line for the overheat protection input signal.	–
	An overload alarm was reset by turning OFF the power supply too many times.	Check the alarm display to see if there is an overload alarm.	Change the method for resetting the alarm.	–
	Operation was performed under an excessive load.	Use the accumulated load ratio to check the load during operation.	Reconsider the load and operating conditions.	–
	A failure occurred in the SERVOPACK.	–	The SERVOPACK may be faulty. Replace the SERVOPACK.	–
	The temperature detection circuit in the Linear Servomotor is faulty or the sensor attached to the machine is faulty.	–	The temperature detection circuit in the Linear Servomotor may be faulty or the sensor attached to the machine may be faulty. Replace the Linear Servomotor or repair the sensor attached to the machine.	–
A.890: Encoder Scale Error	A failure occurred in the linear encoder.	–	The linear encoder may be faulty. Replace the linear encoder.	–
A.891: Encoder Module Error	A failure occurred in the linear encoder.	–	Turn the power supply to the SERVOPACK OFF and ON again. If the alarm still occurs, the linear encoder may be faulty. Replace the linear encoder.	–
A.8A0: External Encoder Error	Setting the origin of the absolute linear encoder failed because the motor moved.	Before you set the origin, use the fully-closed feedback pulse counter to confirm that the motor is not moving.	The motor must be stopped while setting the origin position.	page 5-53
	A failure occurred in the external encoder.	–	Replace the external encoder.	–
A.8A1: External Encoder Module Error	A failure occurred in the external encoder.	–	Replace the external encoder.	–
	A failure occurred in the Serial Converter Unit.	–	Replace the Serial Converter Unit.	–
A.8A2: External Incremental Encoder Sensor Error	A failure occurred in the external encoder.	–	Replace the external encoder.	–
A.8A3: External Absolute Encoder Position Error	A failure occurred in the external absolute encoder.	–	The external absolute encoder may be faulty. Refer to the encoder manufacturer's instruction manual for corrections.	–

Continued on next page.

Continued from previous page.

Alarm Number: Alarm Name	Possible Cause	Confirmation	Correction	Reference
A.8A5: External Encoder Overspeed	An overspeed error was detected in the external encoder.	Check the maximum speed of the external encoder.	Keep the external encoder below its maximum speed.	–
A.8A6: External Encoder Overheated	An overheating error was detected in the external encoder.	–	Replace the external encoder.	–
A.b33: Current Detection Error 3	A failure occurred in the current detection circuit.	–	Turn the power supply to the SERVOPACK OFF and ON again. If the alarm still occurs, the SERVOPACK may be faulty. Replace the SERVOPACK.	–
A.b6A: MECHATROLINK Communications ASIC Error 1	There is a fault in the SERVOPACK MECHATROLINK communications section.	–	Turn the power supply to the SERVOPACK OFF and ON again. If the alarm still occurs, the SERVOPACK may be faulty. Replace the SERVOPACK.	–
A.b6b: MECHATROLINK Communications ASIC Error 2	A malfunction occurred in the MECHATROLINK communications section due to noise.	–	Implement the following countermeasures against noise. • Check the MECHATROLINK-III Communications Cable (RJ-45) and FG wiring. • Attach a ferrite core to the MECHATROLINK-III Communications Cable (RJ-45).	–
	There is a fault in the SERVOPACK MECHATROLINK communications section.	–	Turn the power supply to the SERVOPACK OFF and ON again. If the alarm still occurs, the SERVOPACK may be faulty. Replace the SERVOPACK.	–
A.bF0: System Alarm 0	A failure occurred in the SERVOPACK.	–	Turn the power supply to the SERVOPACK OFF and ON again. If the alarm still occurs, the SERVOPACK may be faulty. Replace the SERVOPACK.	–
A.bF1: System Alarm 1	A failure occurred in the SERVOPACK.	–	Turn the power supply to the SERVOPACK OFF and ON again. If the alarm still occurs, the SERVOPACK may be faulty. Replace the SERVOPACK.	–
A.bF2: System Alarm 2	A failure occurred in the SERVOPACK.	–	Turn the power supply to the SERVOPACK OFF and ON again. If the alarm still occurs, the SERVOPACK may be faulty. Replace the SERVOPACK.	–
A.bF3: System Alarm 3	A failure occurred in the SERVOPACK.	–	Turn the power supply to the SERVOPACK OFF and ON again. If the alarm still occurs, the SERVOPACK may be faulty. Replace the SERVOPACK.	–

Continued on next page.

Continued from previous page.

Alarm Number: Alarm Name	Possible Cause	Confirmation	Correction	Reference
A.bF4: System Alarm 4	A failure occurred in the SERVOPACK.	–	Turn the power supply to the SERVOPACK OFF and ON again. If the alarm still occurs, the SERVOPACK may be faulty. Replace the SERVOPACK.	–
A.bF5: System Alarm 5	A failure occurred in the SERVOPACK.	–	Turn the power supply to the SERVOPACK OFF and ON again. If the alarm still occurs, the SERVOPACK may be faulty. Replace the SERVOPACK.	–
A.bF6: System Alarm 6	A failure occurred in the SERVOPACK.	–	Turn the power supply to the SERVOPACK OFF and ON again. If the alarm still occurs, the SERVOPACK may be faulty. Replace the SERVOPACK.	–
A.bF7: System Alarm 7	A failure occurred in the SERVOPACK.	–	Turn the power supply to the SERVOPACK OFF and ON again. If the alarm still occurs, the SERVOPACK may be faulty. Replace the SERVOPACK.	–
A.bF8: System Alarm 8	A failure occurred in the SERVOPACK.	–	Turn the power supply to the SERVOPACK OFF and ON again. If the alarm still occurs, the SERVOPACK may be faulty. Replace the SERVOPACK.	–
A.C10: Servomotor Out of Control (Detected when the servo is turned ON.)	The order of phases U, V, and W in the motor wiring is not correct.	Check the Servomotor wiring.	Make sure that the Servomotor is correctly wired.	–
	There is an error in the setting of Pn080 = n.□□X□ (Motor Phase Selection).	Check the setting of Pn080 = n.□□X□.	Set Pn080 = n.□□X□ to an appropriate value.	page 5-23
	A failure occurred in the encoder.	–	If the motor wiring is correct and the alarm still occurs after turning the power supply OFF and ON again, the Servomotor or linear encoder may be faulty. Replace the Servomotor or linear encoder.	–
	A failure occurred in the SERVOPACK.	–	Turn the power supply to the SERVOPACK OFF and ON again. If the alarm still occurs, the SERVOPACK may be faulty. Replace the SERVOPACK.	–

Continued on next page.

Continued from previous page.

Alarm Number: Alarm Name	Possible Cause	Confirmation	Correction	Reference
A.C20: Phase Detection Error	The linear encoder signal level is too low.	Check the voltage of the linear encoder signal.	Fine-tune the mounting of the scale head. Or, replace the linear encoder.	–
	The count-up direction of the linear encoder does not match the forward direction of the Moving Coil in the motor.	Check the setting of Pn080 = n.□□X□ (Motor Phase Selection). Check the installation orientation for the linear encoder and Moving Coil.	Change the setting of Pn080 = n.□□X□. Correctly reinstall the linear encoder or Moving Coil.	page 5-23
	The polarity sensor signal is being affected by noise.	–	Correct the FG wiring. Implement countermeasures against noise for the polarity sensor wiring.	–
	The setting of Pn282 (Linear Encoder Pitch) is not correct.	Check the setting of Pn282 (Linear Encoder Pitch).	Check the specifications of the linear encoder and set a correct value.	page 5-18
A.C21: Polarity Sensor Error	The polarity sensor is protruding from the Magnetic Way of the motor.	Check the polarity sensor.	Correctly reinstall the Moving Coil or Magnetic Way of the motor.	–
	The polarity sensor is not wired correctly.	Check the wiring of the polarity sensor.	Correct the wiring of the polarity sensor.	–
	The polarity sensor failed.	–	Replace the polarity sensor.	–
A.C22: Phase Information Disagreement	The SERVOPACK phase information is different from the linear encoder phase information.	–	Perform polarity detection.	page 5-28

Continued on next page.

Continued from previous page.

Alarm Number: Alarm Name	Possible Cause	Confirmation	Correction	Reference
A.C50: Polarity Detection Failure	The parameter settings are not correct.	Check the linear encoder specifications and feedback signal status.	The settings of Pn282 (Linear Encoder Pitch) and Pn080 = n.□□X□ (Motor Phase Selection) may not match the installation. Set the parameters to correct values.	page 5-18, page 5-23
	There is noise on the scale signal.	Check to make sure that the frame grounds of the Serial Converter Unit and Servomotor are connected to the FG terminal on the SERVOPACK and that the FG terminal on the SERVOPACK is connected to the frame ground on the power supply. And, confirm that the shield is properly processed on the Linear Encoder Cable. Check to see if the detection reference is repeatedly output in one direction.	Implement appropriate countermeasures against noise for the Linear Encoder Cable.	–
	An external force was applied to the Moving Coil of the motor.	–	The polarity cannot be properly detected if the detection reference is 0 and the speed feedback is not 0 because of an external force, such as cable tension, applied to the Moving Coil. Implement measures to reduce the external force so that the speed feedback goes to 0. If the external force cannot be reduced, increase the setting of Pn481 (Polarity Detection Speed Loop Gain).	–
	The linear encoder resolution is too low.	Check the linear encoder scale pitch to see if it is within 100 μm.	If the linear encoder scale pitch is 100 μm or higher, the SERVOPACK cannot detect the correct speed feedback. Use a linear encoder scale pitch with higher resolution. (We recommend a pitch of 40 μm or less.) Or, increase the setting of Pn485 (Polarity Detection Reference Speed). However, increasing the setting of Pn485 will increase the Servomotor movement range that is required for polarity detection.	–
A.C51: Overtravel Detected during Polarity Detection	The overtravel signal was detected during polarity detection.	Check the overtravel position.	Wire the overtravel signals. Execute polarity detection at a position where an overtravel signal would not be detected.	page 4-37

Continued on next page.

Continued from previous page.

Alarm Number: Alarm Name	Possible Cause	Confirmation	Correction	Reference
A.C52: Polarity Detection Not Completed	The servo was turned ON when using an absolute linear encoder, Pn587 was set to n.□□□0 (Do not detect polarity), and the polarity had not been detected.	–	When using an absolute linear encoder, set Pn587 to n.□□□1 (Detect polarity).	–
A.C53: Out of Range of Motion for Polarity Detection	The travel distance exceeded the setting of Pn48E (Polarity Detection Range) in the middle of detection.	–	Increase the setting of Pn48E (Polarity Detection Range). Or, increase the setting of Pn481 (Polarity Detection Speed Loop Gain).	–
A.C54: Polarity Detection Failure 2	An external force was applied to the Servomotor.	–	Increase the setting of Pn495 (Polarity Detection Confirmation Force Reference). Increase the setting of Pn498 (Polarity Detection Allowable Error Range). Increasing the allowable error will also increase the motor temperature.	–
A.C80: Encoder Clear Error or Multiturn Limit Setting Error	A failure occurred in the encoder.	–	Turn the power supply to the SERVOPACK OFF and ON again. If the alarm still occurs, the Servomotor or linear encoder may be faulty. Replace the Servomotor or linear encoder.	–
	A failure occurred in the SERVOPACK.	–	Turn the power supply to the SERVOPACK OFF and ON again. If the alarm still occurs, the SERVOPACK may be faulty. Replace the SERVOPACK.	–

Continued on next page.

Continued from previous page.

Alarm Number: Alarm Name	Possible Cause	Confirmation	Correction	Reference
A.C90: Encoder Communications Error	There is a faulty contact in the connector or the connector is not wired correctly for the encoder.	Check the condition of the encoder connector.	Reconnect the encoder connector and check the encoder wiring.	page 4-25
	There is a cable disconnection or short-circuit in the encoder. Or, the cable impedance is outside the specified values.	Check the condition of the Encoder Cable.	Use the Encoder Cable within the specified specifications.	–
	One of the following has occurred: corrosion caused by improper temperature, humidity, or gas, a short-circuit caused by entry of water drops or cutting oil, or faulty contact in connector caused by vibration.	Check the operating environment.	Improve the operating environment, and replace the cable. If the alarm still occurs, replace the SERVOPACK.	page 3-2
	A malfunction was caused by noise.	–	Correct the wiring around the encoder by separating the Encoder Cable from the Servomotor Main Circuit Cable or by grounding the encoder.	page 4-5
	A failure occurred in the SERVOPACK.	–	Connect the Servomotor to another SERVOPACK, and turn ON the control power supply. If no alarm occurs, the SERVOPACK may be faulty. Replace the SERVOPACK.	–
A.C91: Encoder Communications Position Data Acceleration Rate Error	Noise entered on the signal lines because the Encoder Cable is bent or the sheath is damaged.	Check the condition of the Encoder Cable and connectors.	Check the Encoder Cable to see if it is installed correctly.	page 4-8
	The Encoder Cable is bundled with a high-current line or installed near a high-current line.	Check the installation condition of the Encoder Cable.	Confirm that there is no surge voltage on the Encoder Cable.	–
	There is variation in the FG potential because of the influence of machines on the Servomotor side, such as a welder.	Check the installation condition of the Encoder Cable.	Properly ground the machine to separate it from the FG of the encoder.	–

Continued on next page.

Continued from previous page.

Alarm Number: Alarm Name	Possible Cause	Confirmation	Correction	Reference
A.C92: Encoder Communications Timer Error	Noise entered on the signal line from the encoder.	–	Implement countermeasures against noise for the encoder wiring.	page 4-5
	Excessive vibration or shock was applied to the encoder.	Check the operating conditions.	Reduce machine vibration. Correctly install the Servomotor or linear encoder.	–
	A failure occurred in the encoder.	–	Turn the power supply to the SERVOPACK OFF and ON again. If the alarm still occurs, the Servomotor or linear encoder may be faulty. Replace the Servomotor or linear encoder.	–
	A failure occurred in the SERVOPACK.	–	Turn the power supply to the SERVOPACK OFF and ON again. If the alarm still occurs, the SERVOPACK may be faulty. Replace the SERVOPACK.	–
A.CA0: Encoder Parameter Error	A failure occurred in the encoder.	–	Turn the power supply to the SERVOPACK OFF and ON again. If the alarm still occurs, the Servomotor or linear encoder may be faulty. Replace the Servomotor or linear encoder.	–
	A failure occurred in the SERVOPACK.	–	Turn the power supply to the SERVOPACK OFF and ON again. If the alarm still occurs, the SERVOPACK may be faulty. Replace the SERVOPACK.	–

Continued on next page.

Continued from previous page.

Alarm Number: Alarm Name	Possible Cause	Confirmation	Correction	Reference
A.Cb0: Encoder Echo-back Error	The encoder is wired incorrectly or there is faulty contact.	Check the wiring of the encoder.	Make sure that the encoder is correctly wired.	page 4-25
	The specifications of the Encoder Cable are not correct and noise entered on it.	–	Use a shielded twisted-pair wire cable or a screened twisted-pair cable with conductors of at least 0.12 mm^2.	–
	The Encoder Cable is too long and noise entered on it.	–	• Rotary Servomotors: The Encoder Cable wiring distance must be 50 m max. • Linear Servomotors: The Encoder Cable wiring distance must be 20 m max.	–
	There is variation in the FG potential because of the influence of machines on the Servomotor side, such as a welder.	Check the condition of the Encoder Cable and connectors.	Properly ground the machine to separate it from the FG of the encoder.	–
	Excessive vibration or shock was applied to the encoder.	Check the operating conditions.	Reduce machine vibration. Correctly install the Servomotor or linear encoder.	–
	A failure occurred in the encoder.	–	Turn the power supply to the SERVOPACK OFF and ON again. If the alarm still occurs, the Servomotor or linear encoder may be faulty. Replace the Servomotor or linear encoder.	–
	A failure occurred in the SERVOPACK.	–	Turn the power supply to the SERVOPACK OFF and ON again. If the alarm still occurs, the SERVOPACK may be faulty. Replace the SERVOPACK.	–
A.CC0: Multiturn Limit Disagreement	When using a Direct Drive Servomotor, the setting of Pn205 (Multiturn Limit Setting) does not agree with the encoder.	Check the setting of Pn205.	Correct the setting of Pn205 (0 to 65,535).	page 6-40
	The multiturn limit of the encoder is different from that of the SERVOPACK. Or, the multiturn limit of the SERVOPACK has been changed.	Check the setting of Pn205 in the SERVOPACK.	Change the setting if the alarm occurs.	page 6-40
	A failure occurred in the SERVOPACK.	–	Turn the power supply to the SERVOPACK OFF and ON again. If the alarm still occurs, the SERVOPACK may be faulty. Replace the SERVOPACK.	–

Continued on next page.

Continued from previous page.

Alarm Number: Alarm Name	Possible Cause	Confirmation	Correction	Reference
A.CF1: Reception Failed Error in Feedback Option Module Communications	The cable between the Serial Converter Unit and SERVOPACK is not wired correctly or there is a faulty contact.	Check the wiring of the external encoder.	Correctly wire the cable between the Serial Converter Unit and SERVOPACK.	page 4-27
	A specified cable is not being used between Serial Converter Unit and SERVOPACK.	Check the wiring specifications of the external encoder.	Use a specified cable.	–
	The cable between the Serial Converter Unit and SERVOPACK is too long.	Measure the length of the cable that connects the Serial Converter Unit.	The length of the cable between the Serial Converter Unit and SERVOPACK must be 20 m or less.	–
	The sheath on cable between the Serial Converter Unit and SERVOPACK is broken.	Check the cable that connects the Serial Converter Unit.	Replace the cable between the Serial Converter Unit and SERVOPACK.	–
A.CF2: Timer Stopped Error in Feedback Option Module Communications	Noise entered the cable between the Serial Converter Unit and SERVOPACK.	–	Correct the wiring around the Serial Converter Unit, e.g., separate I/O signal lines from the Main Circuit Cables or ground.	–
	A failure occurred in the Serial Converter Unit.	–	Replace the Serial Converter Unit.	–
	A failure occurred in the SERVOPACK.	–	Replace the SERVOPACK.	–
A.d00: Position Deviation Overflow (The setting of Pn520 (Excessive Position Deviation Alarm Level) was exceeded by the position deviation while the servo was ON.)	The Servomotor U, V, and W wiring is not correct.	Check the wiring of the Servomotor's Main Circuit Cables.	Make sure that there are no faulty contacts in the wiring for the Servomotor and encoder.	–
	The position command speed is too fast.	Reduce the position command speed and try operating the SERVOPACK.	Reduce the position reference speed or the reference acceleration rate, or reconsider the electronic gear ratio.	page 5-45
	The acceleration of the position reference is too high.	Reduce the reference acceleration and try operating the SERVOPACK.	Reduce the acceleration of the position reference using a MECHATROLINK command. Or, smooth the position reference acceleration by selecting the position reference filter (ACCFIL) using a MECHATROLINK command.	–
	The setting of Pn520 (Excessive Position Deviation Alarm Level) is too low for the operating conditions.	Check Pn520 (Excessive Position Deviation Alarm Level) to see if it is set to an appropriate value.	Optimize the setting of Pn520.	page 8-8
	A failure occurred in the SERVOPACK.	–	Turn the power supply to the SERVOPACK OFF and ON again. If the alarm still occurs, the SERVOPACK may be faulty. Replace the SERVOPACK.	–

Continued on next page.

Continued from previous page.

Alarm Number: Alarm Name	Possible Cause	Confirmation	Correction	Reference
A.d01: Position Deviation Overflow Alarm at Servo ON	The servo was turned ON after the position deviation exceeded the setting of Pn526 (Excessive Position Deviation Alarm Level at Servo ON) while the servo was OFF.	Check the position deviation while the servo is OFF.	Optimize the setting of Pn526 (Excessive Position Deviation Alarm Level at Servo ON).	page 8-8
A.d02: Position Deviation Overflow Alarm for Speed Limit at Servo ON	If position deviation remains in the deviation counter, the setting of Pn529 or Pn584 (Speed Limit Level at Servo ON) limits the speed when the servo is turned ON. This alarm occurs if a position reference is input and the setting of Pn520 (Excessive Position Deviation Alarm Level) is exceeded.	–	Optimize the setting of Pn520 (Excessive Position Deviation Alarm Level). Or, adjust the setting of Pn529 or Pn584 (Speed Limit Level at Servo ON).	
A.d10: Motor-Load Position Deviation Overflow	The motor direction and external encoder installation orientation are backward.	Check the motor direction and the external encoder installation orientation.	Install the external encoder in the opposite direction, or change the setting of Pn002 = n.X□□□ (External Encoder Usage) to reverse the direction.	page 10-6
	There is an error in the connection between the load (e.g., stage) and external encoder coupling.	Check the coupling of the external encoder.	Check the mechanical coupling.	–
A.d30: Position Data Overflow	The position data exceeded ±1,879,048,192.	Check the input reference pulse counter.	Reconsider the operating specifications.	–
A.E02: MECHATROLINK Internal Synchronization Error 1	The MECHATROLINK transmission cycle fluctuated.	–	Remove the cause of transmission cycle fluctuation at the host controller.	–
	A failure occurred in the SERVOPACK.	–	Turn the power supply to the SERVOPACK OFF and ON again. If the alarm still occurs, the SERVOPACK may be faulty. Replace the SERVOPACK.	–
A.E40: MECHATROLINK Transmission Cycle Setting Error	The setting of MECHATROLINK transmission cycle is outside of the specified range.	Check the setting of the MECHATROLINK transmission cycle.	Set the MECHATROLINK transmission cycle to an appropriate value.	–
A.E41: MECHATROLINK Communications Data Size Setting Error	The number of transmission bytes set on DIP switch S3 is not correct.	Check the MECHATROLINK communications data size of the host controller.	Reset DIP switch S3 to change the number of transmission bytes to an appropriate value.	page 5-13

Continued on next page.

Continued from previous page.

Alarm Number: Alarm Name	Possible Cause	Confirmation	Correction	Reference
A.E42: MECHATROLINK Station Address Setting Error	The station address is outside of the setting range.	Check rotary switches S1 and S2 to see if the station address is between 03 and EF.	Check the setting of the station address of the host controller, and reset rotary switches S1 and S2 to change the address to an appropriate value between 03 and EF.	page 5-13
	Two or more stations on the communications network have the same address.	Check to see if two or more stations on the communications network have the same address.	Check the setting of the station address of the host controller, and reset rotary switches S1 and S2 to change the address to an appropriate value between 03 and EF.	
A.E50*5: MECHATROLINK Synchronization Error	The WDT data in the host controller was not updated normally.	Check to see if the WDT data is being updated at the host controller.	Correctly update the WDT data at the host controller.	–
	A failure occurred in the SERVOPACK.	–	Turn the power supply to the SERVOPACK OFF and ON again. If the alarm still occurs, the SERVOPACK may be faulty. Replace the SERVOPACK.	–
A.E51: MECHATROLINK Synchronization Failed	The WDT data at the host controller was not updated correctly at the start of synchronous communications, so synchronous communications could not be started.	Check to see if the WDT data is being updated in the host controller.	Correctly update the WDT data at the host controller.	–
	A failure occurred in the SERVOPACK.	–	Turn the power supply to the SERVOPACK OFF and ON again. If the alarm still occurs, the SERVOPACK may be faulty. Replace the SERVOPACK.	–
A.E60*5: Reception Error in MECHATROLINK Communications	MECHATROLINK wiring is not correct.	Check the MECHATROLINK wiring.	Correct the MECHATROLINK-III Communications Cable (RJ-45) wiring.	–
	A MECHATROLINK data reception error occurred due to noise.	–	Implement countermeasures against noise. (Check the MECHATROLINK-III Communications Cable (RJ-45) and FG wiring, and implement measures such as attaching a ferrite core to the MECHATROLINK-III Communications Cable (RJ-45).)	–
	A failure occurred in the SERVOPACK.	–	Turn the power supply to the SERVOPACK OFF and ON again. If the alarm still occurs, the SERVOPACK may be faulty. Replace the SERVOPACK.	–

Continued on next page.

Continued from previous page.

Alarm Number: Alarm Name	Possible Cause	Confirmation	Correction	Reference
A.E61: Synchronization Interval Error in MECHATROLINK Transmission Cycle	The MECHATROLINK transmission cycle fluctuated.	Check the setting of the MECHATROLINK transmission cycle.	Remove the cause of transmission cycle fluctuation at the host controller.	–
	A failure occurred in the SERVOPACK.	–	Turn the power supply to the SERVOPACK OFF and ON again. If the alarm still occurs, the SERVOPACK may be faulty. Replace the SERVOPACK.	–
A.E63: MECHATROLINK Synchronization Frame Not Received	MECHATROLINK wiring is not correct.	Check the Servomotor wiring.	Correct the MECHATROLINK-III Communications Cable (RJ-45) wiring.	–
	A MECHATROLINK data reception error occurred due to noise.	–	Implement countermeasures against noise. (Check the MECHATROLINK-III Communications Cable (RJ-45) and FG wiring, and implement measures such as attaching a ferrite core to the MECHATROLINK-III Communications Cable (RJ-45).)	–
	A failure occurred in the SERVOPACK.	–	Turn the power supply to the SERVOPACK OFF and ON again. If the alarm still occurs, the SERVOPACK may be faulty. Replace the SERVOPACK.	–
A.E71: Safety Option Module Detection Failure	There is a faulty connection between the SERVOPACK and the Safety Option Module.	Check the connection between the SERVOPACK and the Safety Option Module.	Correctly connect the Safety Option Module.	–
	The Safety Option Module was disconnected.	–	Execute Fn014 (Reset Option Module Configuration Error) from the Digital Operator or SigmaWin+ and then turn the power supply to the SERVOPACK OFF and ON again.	page 12-45
	A failure occurred in the Safety Option Module.	–	Replace the Safety Option Module.	–
	A failure occurred in the SERVOPACK.	–	Replace the SERVOPACK.	–
A.E72: Feedback Option Module Detection Failure	There is a faulty connection between the SERVOPACK and the Feedback Option Module.	Check the connection between the SERVOPACK and the Feedback Option Module.	Correctly connect the Feedback Option Module.	–
	The Feedback Option Module was disconnected.	–	Reset the Option Module configuration error and turn the power supply to the SERVOPACK OFF and ON again.	page 12-45
	A failure occurred in the Feedback Option Module.	–	Replace the Feedback Option Module.	–
	A failure occurred in the SERVOPACK.	–	Replace the SERVOPACK.	–

Continued on next page.

Continued from previous page.

Alarm Number: Alarm Name	Possible Cause	Confirmation	Correction	Reference
A.E74: Unsupported Safety Option Module	A failure occurred in the Safety Option Module.	–	Replace the Safety Option Module.	–
	An unsupported Safety Option Module was connected.	Refer to the catalog of the connected Safety Option Module.	Connect a compatible Safety Option Module.	–
A.Eb1: Safety Function Signal Input Timing Error	The delay between activation of the /HWBB1 and /HWBB2 input signals for the HWBB was ten second or longer.	Measure the time delay between the /HWBB1 and /HWBB2 signals.	The output signal circuits or devices for /HWBB1 and /HWBB2 or the SERVOPACK input signal circuits may be faulty. Alternatively, the input signal cables may be disconnected. Check to see if any of these items are faulty or have been disconnected.	–
	A failure occurred in the SERVOPACK.	–	Replace the SERVOPACK.	–
A.EC8: Gate Drive Error 1 (An error occurred in the gate drive circuit.)	A failure occurred in the SERVOPACK.	–	Turn the power supply to the SERVOPACK OFF and ON again. If the alarm still occurs, the SERVOPACK may be faulty. Replace the SERVOPACK.	–
A.EC9: Gate Drive Error 2 (An error occurred in the gate drive circuit.)				
A.Ed1: Command Execution Timeout	A timeout error occurred for a MECHATROLINK command.	Check the motor status when the command is executed.	Execute the SV_ON or SENS_ON command only when the motor is not operating.	–
		• For fully-closed loop control, check the status of the external encoder when the command is executed. • For other types of control, check the status of the linear encoder when the command is executed.	Execute the SENS_ON command only when an external encoder (e.g., a linear encoder) is connected.	–

Continued on next page.

Continued from previous page.

Alarm Number: Alarm Name	Possible Cause	Confirmation	Correction	Reference
A.F10: Power Supply Line Open Phase (The voltage was low for more than one second for phase R, S, or T when the main power supply was ON.)	The three-phase power supply wiring is not correct.	Check the power supply wiring.	Make sure that the power supply is correctly wired.	page 4-11
	The three-phase power supply is unbalanced.	Measure the voltage for each phase of the three-phase power supply.	Balance the power supply by changing phases.	–
	A single-phase power supply was input without specifying a single-phase AC power supply input (Pn00B = n.□1□□).	Check the power supply and the parameter setting.	Match the parameter setting to the power supply.	page 4-11
	A failure occurred in the SERVOPACK.	–	Turn the power supply to the SERVOPACK OFF and ON again. If the alarm still occurs, the SERVOPACK may be faulty. Replace the SERVOPACK.	–
FL-1*5: System Alarm	A failure occurred in the SERVOPACK.	–	Turn the power supply to the SERVOPACK OFF and ON again. If the alarm still occurs, the SERVOPACK may be faulty. Replace the SERVOPACK.	–
FL-2*5: System Alarm				
FL-3*5: System Alarm				
FL-4*5: System Alarm				
FL-5*5: System Alarm				
FL-6*5: System Alarm				
CPF00: Digital Operator Communications Error 1	There is a faulty contact between the Digital Operator and the SERVOPACK.	Check the connector contact.	Disconnect the connector and insert it again. Or, replace the cable.	–
	A malfunction was caused by noise.	–	Keep the Digital Operator or the cable away from sources of noise.	–
CPF01: Digital Operator Communications Error 2	A failure occurred in the Digital Operator.	–	Disconnect the Digital Operator and then connect it again. If the alarm still occurs, the Digital Operator may be faulty. Replace the Digital Operator.	–
	A failure occurred in the SERVOPACK.	–	Turn the power supply to the SERVOPACK OFF and ON again. If the alarm still occurs, the SERVOPACK may be faulty. Replace the SERVOPACK.	–

*1. Detection Conditions
- Rotary Servomotor
  If either of the following conditions is detected, an alarm will occur.
  - $\text{Pn533 [min}^{-1}] \times \dfrac{\text{Encoder resolution}}{6 \times 10^5} \leqq \dfrac{\text{Pn20E}}{\text{Pn210}}$
  - $\text{Maximum motor speed [min}^{-1}] \times \dfrac{\text{Encoder resolution}}{\text{Approx. } 3.66 \times 10^{12}} \geqq \dfrac{\text{Pn20E}}{\text{Pn210}}$
- Linear Servomotor
  If either of the following conditions is detected, an alarm will occur.
  - $\dfrac{\text{Pn585 [mm/s]}}{\text{Linear encoder pitch [}\mu\text{m]}} \times \dfrac{\text{Resolution of Serial Converter Unit}}{10} \leqq \dfrac{\text{Pn20E}}{\text{Pn210}}$
  - $\dfrac{\text{Pn385 [100 mm/s]}}{\text{Linear encoder pitch [}\mu\text{m]}} \times \dfrac{\text{Resolution of Serial Converter Unit}}{\text{Approx. } 6.10 \times 10^5} \geqq \dfrac{\text{Pn20E}}{\text{Pn210}}$

*2. Detection Conditions
- Rotary Servomotor
  If either of the following conditions is detected, an alarm will occur.
  - $\text{Rated motor speed [min}^{-1}] \times 1/3 \times \dfrac{\text{Encoder resolution}}{6 \times 10^5} \leqq \dfrac{\text{Pn20E}}{\text{Pn210}}$
  - $\text{Maximum motor speed [min}^{-1}] \times \dfrac{\text{Encoder resolution}}{\text{Approx. } 3.66 \times 10^{12}} \geqq \dfrac{\text{Pn20E}}{\text{Pn210}}$
- Linear Servomotor
  If either of the following conditions is detected, an alarm will occur.
  - $\dfrac{\text{Rated motor speed [mm/s]} \times 1/3}{\text{Linear encoder pitch [}\mu\text{m]}} \times \dfrac{\text{Resolution of Serial Converter Unit}}{10} \leqq \dfrac{\text{Pn20E}}{\text{Pn210}}$
  - $\dfrac{\text{Pn385 [100 mm/s]}}{\text{Linear encoder pitch [}\mu\text{m]}} \times \dfrac{\text{Resolution of Serial Converter Unit}}{\text{Approx. } 6.10 \times 10^5} \geqq \dfrac{\text{Pn20E}}{\text{Pn210}}$

*3. Refer to the following manual for details.
Σ-7-Series Peripheral Device Selection Manual (Manual No.: SIEP S800001 32)

*4. The SERVOPACK will fail if the External Regenerative Resistor or Regenerative Resistor Unit is connected while the jumper is connected between the B2 and B3 terminals.

*5. These alarms are not stored in the alarm history. They are only displayed on the panel display.

12.2.3 Resetting Alarms

If there is an ALM (Servo Alarm) signal, use one of the following methods to reset the alarm after eliminating the cause of the alarm.

> **Important**
> Be sure to eliminate the cause of an alarm before you reset the alarm.
> If you reset the alarm and continue operation without eliminating the cause of the alarm, it may result in damage to the equipment or fire.

Resetting Alarms with the SigmaWin+

Use the following procedure to reset alarms with the SigmaWin+.

1. Click the Servo Drive Button in the workspace of the Main Window of the SigmaWin+.
2. Select **Display Alarm** in the Menu Dialog Box.
   The Alarm Display Dialog Box will be displayed.
3. Click the **Reset axes** Button.

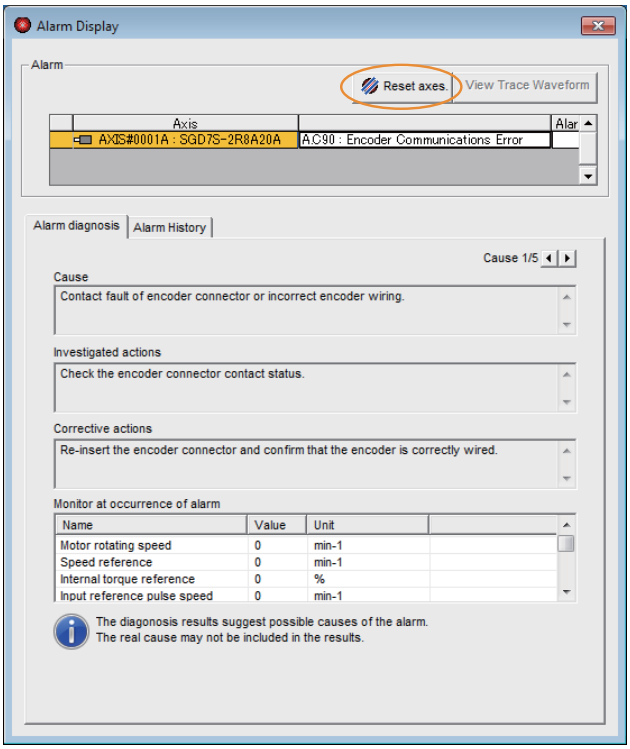

The alarm will be reset, and the alarm display will be cleared.

This concludes the procedure to reset alarms.

Resetting Alarms by Sending the ALM_CLR (Clear Warning or Alarm) Command

Refer to the following manual for details.

Σ-7-Series MECHATROLINK-III Communications Standard Servo Profile Command Manual (Manual No.: SIEP S800001 31)

Resetting Alarms Using the Digital Operator

Press the **ALARM RESET** Key on the Digital Operator. Refer to the following manual for details on resetting alarms.

Σ-7-Series Digital Operator Operating Manual (Manual No.: SIEP S800001 33)

12.2.4 Displaying the Alarm History

The alarm history displays up to the last ten alarms that have occurred in the SERVOPACK.

Note: The following alarms are not displayed in the alarm history: A.E50 (MECHATROLINK Synchronization Error), A.E60 (Reception Error in MECHATROLINK Communications), and FL-1 to FL-6.

Preparations

No preparations are required.

Applicable Tools

The following table lists the tools that you can use to display the alarm history and the applicable tool functions.

Tool	Function	Reference
Digital Operator	Fn000	Σ-7-Series Digital Operator Operating Manual (Manual No.: SIEP S800001 33)
SigmaWin+	***Troubleshooting – Display Alarm***	***Operating Procedure*** on page 12-43

Operating Procedure

Use the following procedure to display the alarm history.

1. Click the Servo Drive Button in the workspace of the Main Window of the SigmaWin+.

2. Select **Display Alarm** in the Menu Dialog Box.
   The Alarm Display Dialog Box will be displayed.

3. Click the **Alarm History** Tab.
   The following display will appear and you can check the alarms that occurred in the past.

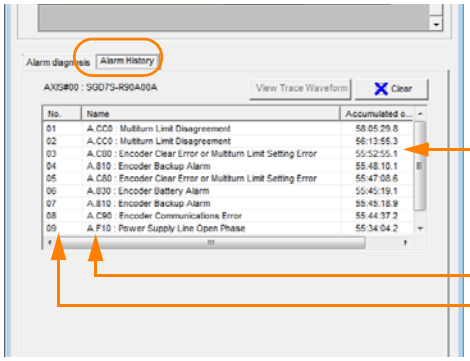

Accumulated operation time
Total operation time to the point at which the alarm occurred is displayed in increments of 100 ms from when the control power supply and main circuit power supply turned ON.
For 24-hour, 365-day operation, measurements are possible for approximately 13 years.

Alarm number: Alarm name

Alarms in order of occurrence
(Older alarms have higher numbers.)

Information

1. If the same alarm occurs consecutively within one hour, it is not saved in the alarm history. If it occurs after an hour or more, it is saved.
2. You can clear the alarm history by clicking the **Clear** Button. The alarm history is not cleared when alarms are reset or when the SERVOPACK main circuit power is turned OFF.

This concludes the procedure to display the alarm history.

12.2.5 Clearing the Alarm History

You can clear the alarm history that is recorded in the SERVOPACK.

The alarm history is not cleared when alarms are reset or when the SERVOPACK main circuit power is turned OFF. You must perform the following procedure.

Preparations

Always check the following before you clear the alarm history.

- The parameters must not be write prohibited.

Applicable Tools

The following table lists the tools that you can use to clear the alarm history and the applicable tool functions.

Tool	Function	Reference
Digital Operator	Fn006	Σ-7-Series Digital Operator Operating Manual (Manual No.: SIEP S800001 33)
SigmaWin+	***Troubleshooting – Display Alarm***	***Operating Procedure*** on page 12-44

Operating Procedure

Use the following procedure to reset the alarm history.

1. Click the Servo Drive Button in the workspace of the Main Window of the SigmaWin+.
2. Select **Display Alarm** in the Menu Dialog Box.
   The Alarm Display Dialog Box will be displayed.
3. Click the **Alarm History** Tab.
4. Click the **Clear** Button.
   The alarm history will be cleared.

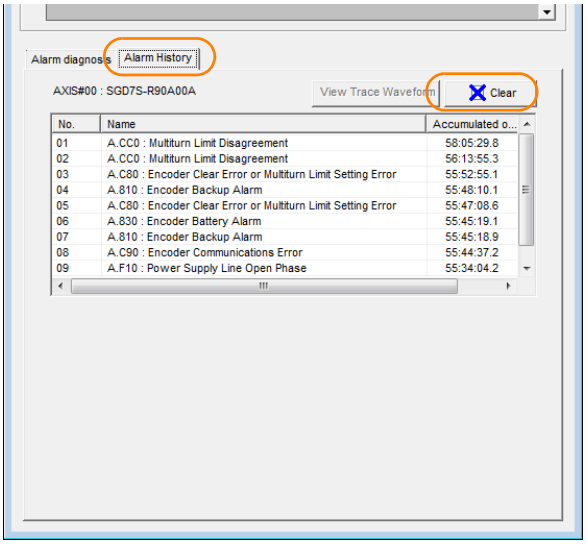

This concludes the procedure to reset the alarm history.

12.2.6 Resetting Alarms Detected in Option Modules

If any Option Modules are attached to the SERVOPACK, the SERVOPACK detects the presence and models of the connected Option Modules. If it finds any errors, it outputs alarms.

You can delete those alarms with this operation.

Information
- This operation is the only way to reset alarms for Option Modules. The alarms are not reset when you reset other alarms or when you turn OFF the power supply to the SERVOPACK.
- Always remove the cause of an alarm before you reset the alarm.

Preparations

Always check the following before you clear an alarm detected in an Option Module.

- The parameters must not be write prohibited.

Applicable Tools

The following table lists the tools that you can use to reset Option Module configuration errors and the applicable tool functions.

Tool	Function	Reference
Digital Operator	Fn014	Σ-7-Series Digital Operator Operating Manual (Manual No.: SIEP S800001 33)
SigmaWin+	***Troubleshooting – Display Alarm***	*Operating Procedure* on page 12-45

Operating Procedure

Use the following procedure to reset alarms detected in Option Modules.

1. Click the Servo Drive Button in the workspace of the Main Window of the SigmaWin+.
2. Select **Display Alarm** in the Menu Dialog Box.
   The Display Alarm Dialog Box will be displayed.
3. Click the **Reset axes** Button.

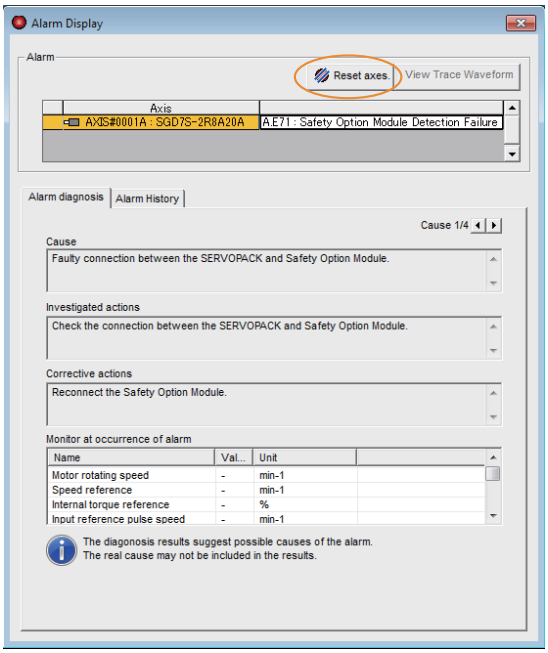

The Reset Option Module Configuration Error Dialog Box will be displayed.

4. Select the **Clear** Check Box for the Option Module for which to reset the alarm and then click the **Execute** Button.

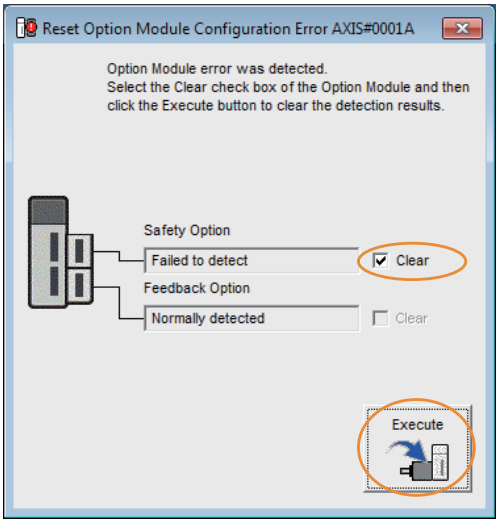

5. Read the precaution and then click the **OK** Button.

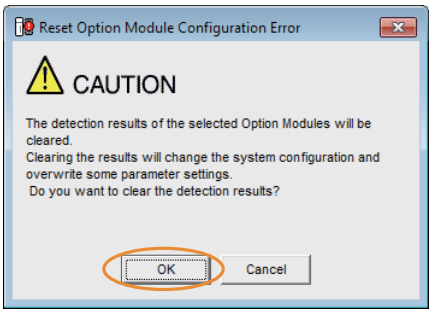

6. Read the precaution and then click the **OK** Button.

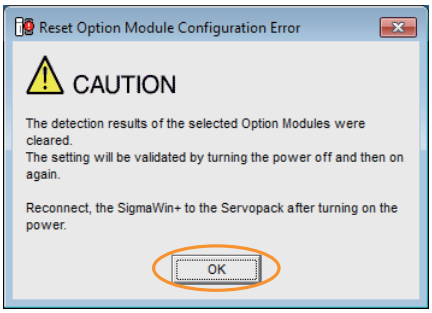

7. Turn the power supply to the SERVOPACK OFF and ON again.

This concludes the procedure to reset alarms detected in Option Modules.

12.2.7 Resetting Motor Type Alarms

The SERVOPACK automatically determines the type of Servomotor that is connected to it. If the type of Servomotor that is connected is changed, an A.070 alarm (Motor Type Change Detected) will occur the next time the SERVOPACK is started. If an A.070 alarm occurs, you must set the parameters to match the new type of Servomotor.

An A.070 alarm is reset by executing the Reset Motor Type Alarm utility function.

Information

1. This utility function is the only way to reset an A.070 alarm (Motor Type Change Detected). The errors are not reset when you reset alarms or turn OFF the power supply to the SERVOPACK.
2. If an A.070 alarm occurs, first set the parameters according to the newly connected Servomotor type and then execute the Reset Motor Type Alarm utility function.

Preparations

Always check the following before you reset a motor type alarm.

- The parameters must not be write prohibited.

Applicable Tools

The following table lists the tools that you can use to clear the motor type alarm and the applicable tool functions.

Tool	Function	Reference
Digital Operator	Fn021	Σ-7-Series Digital Operator Operating Manual (Manual No.: SIEP S800001 33)
SigmaWin+	***Troubleshooting – Reset Motor Type Alarm***	*Operating Procedure* on page 12-47

Operating Procedure

Use the following procedure to reset Motor Type alarm.

1. Click the Servo Drive Button in the workspace of the Main Window of the SigmaWin+.
2. Select **Reset Motor Type Alarm** in the Menu Dialog Box.
   The Reset Motor Type Alarm Dialog Box will be displayed.
3. Click the **Reset** Button.

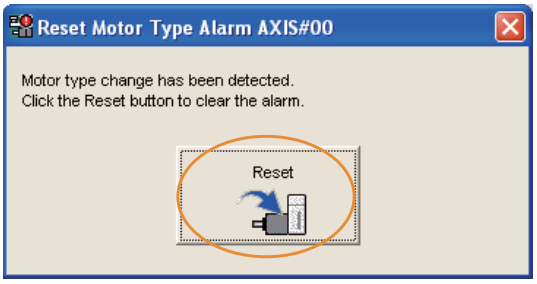

4. Read the precaution and then click the **OK** Button.

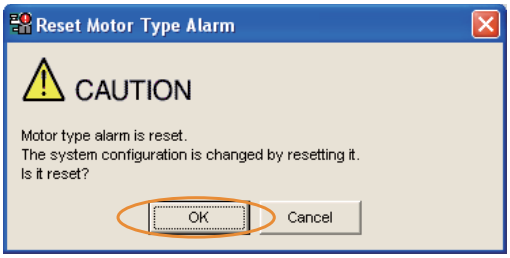

5. Read the precaution and then click the **OK** Button.

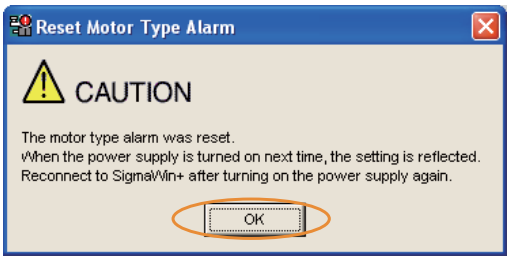

6. Turn the power supply to the SERVOPACK OFF and ON again.

This concludes the procedure to reset Motor Type alarms.

12.3 Warning Displays

If a warning occurs in the SERVOPACK, a warning number will be displayed on the panel display. Warnings are displayed to warn you before an alarm occurs.

This section provides a list of warnings and the causes of and corrections for warnings.

12.3.1 List of Warnings

The warning table gives the warning name and warning meaning in order of the warning numbers.

Warning Number	Warning Name	Meaning	Resetting
A.900	Position Deviation Overflow	The position deviation exceeded the percentage set with the following formula: (Pn520 × Pn51E/100)	Required.
A.901	Position Deviation Overflow Alarm at Servo ON	The position deviation when the servo was turned ON exceeded the percentage set with the following formula: (Pn526 × Pn528/100)	Required.
A.910	Overload	This warning occurs before an overload alarm (A.710 or A.720) occurs. If the warning is ignored and operation is continued, an alarm may occur.	Required.
A.911	Vibration	Abnormal vibration was detected during motor operation. The detection level is the same as A.520. Set whether to output an alarm or a warning by setting Pn310 (Vibration Detection Switch).	Required.
A.912	Internal Temperature Warning 1 (Control Board Temperature Error)	The surrounding temperature of the control PCB is abnormal.	Required.
A.913	Internal Temperature Warning 2 (Power Board Temperature Error)	The surrounding temperature of the power PCB is abnormal.	Required.
A.920	Regenerative Overload	This warning occurs before an A.320 alarm (Regenerative Overload) occurs. If the warning is ignored and operation is continued, an alarm may occur.	Required.
A.921	Dynamic Brake Overload	This warning occurs before an A.731 alarm (Dynamic Brake Overload) occurs. If the warning is ignored and operation is continued, an alarm may occur.	Required.
A.923	SERVOPACK Built-in Fan Stopped	The fan inside the SERVOPACK stopped.	Required.
A.930	Absolute Encoder Battery Error	This warning occurs when the voltage of absolute encoder's battery is low.	Required.
A.93B	Overheat Warning	The input voltage (temperature) for the overheat protection input (TH) signal exceeded the setting of Pn61C (Overheat Warning Level).	Required.
A.942	Speed Ripple Compensation Information Disagreement	The speed ripple compensation information stored in the encoder does not agree with the speed ripple compensation information stored in the SERVOPACK.	Required.
A.94A	Data Setting Warning 1 (Parameter Number Error)	There is an error in the parameter number for a Data Setting Warning 1 (Parameter Number) command.	Automatically reset.*
A.94b	Data Setting Warning 2 (Out of Range)	The command data is out of range.	Automatically reset.*
A.94C	Data Setting Warning 3 (Calculation Error)	A calculation error was detected.	Automatically reset.*

Continued on next page.

Continued from previous page.

Warning Number	Warning Name	Meaning	Resetting
A.94d	Data Setting Warning 4 (Parameter Size)	The data sizes do not match.	Automatically reset.*
A.94E	Data Setting Warning 5 (Latch Mode Error)	A latch mode error was detected.	Required.
A.95A	Command Warning 1 (Unsatisfied Command Conditions)	A command was sent when the conditions for sending a command were not satisfied.	Automatically reset.*
A.95b	Command Warning 2 (Unsupported Command)	An unsupported command was sent.	Automatically reset.*
A.95d	Command Warning 4 (Command Interference)	There was command interference, particularly latch command interference.	Automatically reset.*
A.95E	Command Warning 5 (Subcommand Not Possible)	The subcommand and main command interfere with each other.	Automatically reset.*
A.95F	Command Warning 6 (Undefined Command)	An undefined command was sent.	Automatically reset.*
A.960	MECHATROLINK Communications Warning	A communications error occurred during MECHATROLINK communications.	Required.
A.971	Undervoltage	This warning occurs before an A.410 alarm (Undervoltage) occurs. If the warning is ignored and operation is continued, an alarm may occur.	Required.
A.97A	Command Warning 7 (Phase Error)	A command that cannot be executed in the current phase was sent.	Automatically reset.*
A.97b	Data Clamp Out of Range	The set command data was clamped to the minimum or maximum value of the allowable setting range.	Automatically reset.*
A.9A0	Overtravel	Overtravel was detected while the servo was ON.	Required.
A.9b0	Preventative Maintenance Warning	One of the consumable parts has reached the end of its service life.	Required.

* If using the commands for the MECHATROLINK-III standard servo profile, the warning will automatically be cleared after the correct command is received. If you use MECHATROLINK-II-compatible profile commands, send an ALM_CLR (Clear Warning or Alarm) command to clear the warning.

Note: Use Pn008 = n.□X□□ (Warning Detection Selection) to control warning detection.
However, the following warnings are not affected by the setting of Pn008 = n.□X□□ and other parameter settings are required in addition to Pn008 = n.□X□□.

Warning	Parameters That Must Be Set to Select Warning Detection	Reference
A.911	Pn310 = n.□□□X (Vibration Detection Setting)	page 6-51
A.923	– (Not affected by the setting of Pn008 = n.□X□□.)	–
A.930	Pn008 = n.□□□X (Low Battery Voltage Alarm/Warning Selection)	page 12-3
A.942	Pn423 = n.□□X□ (Speed Ripple Compensation Information Disagreement Warning Detection Selection)	page 8-60
A.94A to A.960 A.97A to A.97b	Pn800=n.□□X□ (Warning Check Masks)	page 13-3
A.971	Pn008 = n.□□X□ (Function Selection for Undervoltage) (Not affected by the setting of Pn008 = n.□X□□.)	page 6-17
A.9A0	Pn00D = n.X□□□ (Overtravel Warning Detection Selection) (Not affected by the setting of Pn008 = n.□X□□.)	page 5-32
A.9b0	Pn00F = n.□□□X (Preventative Maintenance Selection)	page 9-17

12.3.2 Troubleshooting Warnings

The causes of and corrections for the warnings are given in the following table. Contact your Yaskawa representative if you cannot solve a problem with the correction given in the table.

Warning Number: Warning Name	Possible Cause	Confirmation	Correction	Reference
A.900: Position Deviation Overflow	The Servomotor U, V, and W wiring is not correct.	Check the wiring of the Servomotor's Main Circuit Cables.	Make sure that there are no faulty connections in the wiring for the Servomotor and encoder.	–
	A SERVOPACK gain is too low.	Check the SERVOPACK gains.	Increase the servo gain, e.g., by using autotuning without a host reference.	page 8-24
	The acceleration of the position reference is too high.	Reduce the reference acceleration and try operating the SERVOPACK.	Reduce the acceleration of the position reference using a MECHATROLINK command. Or, smooth the position reference acceleration by selecting the position reference filter (ACCFIL) using a MECHATROLINK command.	–
	The excessive position deviation alarm level (Pn520 × Pn51E/100) is too low for the operating conditions.	Check excessive position deviation alarm level (Pn520 × Pn51E/100) to see if it is set to an appropriate value.	Optimize the settings of Pn520 and Pn51E.	page 8-8
	A failure occurred in the SERVOPACK.	–	Turn the power supply to the SERVOPACK OFF and ON again. If the alarm still occurs, the SERVOPACK may be faulty. Replace the SERVOPACK.	–
A.901: Position Deviation Overflow Alarm at Servo ON	The position deviation when the servo was turned ON exceeded the percentage set with the following formula: (Pn526 × Pn528/100)	–	Optimize the setting of Pn528 (Excessive Position Error Warning Level at Servo ON).	–

Continued on next page.

Continued from previous page.

Warning Number: Warning Name	Possible Cause	Confirmation	Correction	Reference
A.910: Overload (warning before an A.710 or A.720 alarm occurs)	The wiring is not correct or there is a faulty connection in the motor or encoder wiring.	Check the wiring.	Make sure that the Servomotor and encoder are correctly wired.	–
	Operation was performed that exceeded the overload protection characteristics.	Check the motor overload characteristics and Run command.	Reconsider the load and operating conditions. Or, increase the motor capacity.	–
	An excessive load was applied during operation because the Servomotor was not driven because of mechanical problems.	Check the operation reference and motor speed.	Remove the mechanical problem.	–
	The overload warning level (Pn52B) is not suitable.	Check that the overload warning level (Pn52B) is suitable.	Set a suitable overload warning level (Pn52B).	page 5-42
	A failure occurred in the SERVOPACK.	–	The SERVOPACK may be faulty. Replace the SERVOPACK.	–
A.911: Vibration	Abnormal vibration was detected during motor operation.	Check for abnormal motor noise, and check the speed and torque waveforms during operation.	Reduce the motor speed. Or, reduce the servo gain with custom tuning.	page 8-42
	The setting of Pn103 (Moment of Inertia Ratio) is greater than the actual moment of inertia or was greatly changed.	Check the moment of inertia ratio or mass ratio.	Set Pn103 (Moment of Inertia Ratio) to an appropriate value.	page 8-16
	The vibration detection level (Pn312 or Pn384) is not suitable.	Check that the vibration detection level (Pn312 or Pn384) is suitable.	Set a suitable vibration detection level (Pn312 or Pn384).	page 6-51

Continued on next page.

Continued from previous page.

Warning Number: Warning Name	Possible Cause	Confirmation	Correction	Reference
A.912: Internal Temperature Warning 1 (Control Board Temperature Error)	The surrounding temperature is too high.	Check the surrounding temperature using a thermometer. Or, check the operating status with the SERVOPACK installation environment monitor.	Decrease the surrounding temperature by improving the SERVOPACK installation conditions.	page 3-7
	An overload alarm was reset by turning OFF the power supply too many times.	Check the alarm display to see if there is an overload alarm.	Change the method for resetting the alarm.	–
	There was an excessive load or operation was performed that exceeded the regenerative processing capacity.	Use the accumulated load ratio to check the load during operation, and use the regenerative load ratio to check the regenerative processing capacity.	Reconsider the load and operating conditions.	–
	The SERVOPACK installation orientation is not correct or there is insufficient space around the SERVOPACK.	Check the SERVOPACK installation conditions.	Install the SERVOPACK according to specifications.	page 3-3, page 3-6
	A failure occurred in the SERVOPACK.	–	The SERVOPACK may be faulty. Replace the SERVOPACK.	–
A.913: Internal Temperature Warning 2 (Power Board Temperature Error)	The surrounding temperature is too high.	Check the surrounding temperature using a thermometer. Or, check the operating status with the SERVOPACK installation environment monitor.	Decrease the surrounding temperature by improving the SERVOPACK installation conditions.	page 3-7
	An overload alarm was reset by turning OFF the power supply too many times.	Check the alarm display to see if there is an overload alarm.	Change the method for resetting the alarm.	–
	There was an excessive load or operation was performed that exceeded the regenerative processing capacity.	Use the accumulated load ratio to check the load during operation, and use the regenerative load ratio to check the regenerative processing capacity.	Reconsider the load and operating conditions.	–
	The SERVOPACK installation orientation is not correct or there is insufficient space around the SERVOPACK.	Check the SERVOPACK installation conditions.	Install the SERVOPACK according to specifications.	page 3-3, page 3-6
	A failure occurred in the SERVOPACK.	–	The SERVOPACK may be faulty. Replace the SERVOPACK.	–

Continued on next page.

Continued from previous page.

Warning Number: Warning Name	Possible Cause	Confirmation	Correction	Reference
A.920: Regenerative Overload (warning before an A.320 alarm occurs)	The power supply voltage exceeded the specified range.	Measure the power supply voltage.	Set the power supply voltage within the specified range.	–
	There is insufficient external regenerative resistance, regenerative resistor capacity, or SERVOPACK capacity, or there has been a continuous regeneration state.	Check the operating conditions or the capacity.	Change the regenerative resistance value, regenerative resistance capacity, or SERVOPACK capacity. Reconsider the operating conditions.	–
	There was a continuous regeneration state because a negative load was continuously applied.	Check the load applied to the Servomotor during operation.	Reconsider the system including the servo, machine, and operating conditions.	–
A.921: Dynamic Brake Overload (warning before an A.731 alarm occurs)	The Servomotor was rotated by an external force.	Check the operation status.	Implement measures to ensure that the motor will not be rotated by an external force.	–
	When the Servomotor was stopped with the dynamic brake, the rotational or linear kinetic energy exceeded the capacity of the dynamic brake resistor.	Check the power consumed by the DB resistor to see how frequently the DB is being used.	Reconsider the following: • Reduce the Servomotor command speed. • Decrease the moment of inertia or mass. • Reduce the frequency of stopping with the dynamic brake.	–
	A failure occurred in the SERVOPACK.	–	The SERVOPACK may be faulty. Replace the SERVOPACK.	–
A.923: SERVOPACK Built-in Fan Stopped	The fan inside the SERVOPACK stopped.	Check for foreign matter inside the SERVOPACK.	Remove foreign matter from the SERVOPACK. If the alarm still occurs, the SERVOPACK may be faulty. Replace the SERVOPACK.	–
A.930: Absolute Encoder Battery Error (The absolute encoder battery voltage was lower than the specified level.) (Detected only when an absolute encoder is connected.)	The battery connection is faulty or a battery is not connected.	Check the battery connection.	Correct the battery connection.	page 4-26
	The battery voltage is lower than the specified value (2.7 V).	Measure the battery voltage.	Replace the battery.	page 12-3
	A failure occurred in the SERVOPACK.	–	The SERVOPACK may be faulty. Replace the SERVOPACK.	–

Continued on next page.

Continued from previous page.

Warning Number: Warning Name	Possible Cause	Confirmation	Correction	Reference
A.93B: Overheat Warning	The surrounding temperature is too high.	Check the surrounding temperature using a thermometer.	Lower the surrounding temperature by improving the installation conditions of the Linear Servomotor or the machine.	–
	Operation was performed under an excessive load.	Use the accumulated load ratio to check the load during operation.	Reconsider the load and operating conditions.	–
	A failure occurred in the SERVOPACK.	–	The SERVOPACK may be faulty. Replace the SERVOPACK.	–
	The temperature detection circuit in the Linear Servomotor is faulty or the sensor attached to the machine is faulty.	–	The temperature detection circuit in the Linear Servomotor may be faulty or the sensor attached to the machine may be faulty. Replace the Linear Servomotor or repair the sensor attached to the machine.	–
A.942: Speed Ripple Compensation Information Disagreement	The speed ripple compensation information stored in the encoder does not agree with the speed ripple compensation information stored in the SERVOPACK.	–	Reset the speed ripple compensation value on the SigmaWin+.	page 8-60
		–	Set Pn423 to n.□□1□ (Do not detect A.942 alarms). However, changing the setting may increase the speed ripple.	page 8-60
		–	Set Pn423 to n.□□□0 (Disable torque ripple compensation). However, changing the setting may increase the speed ripple.	page 8-60
A.94A: Data Setting Warning 1 (Parameter Number Error)	An invalid parameter number was used.	Check the command that caused the warning.	Use the correct parameter number.	page 12-58
A.94b: Data Setting Warning 2 (Out of Range)	The set command data was clamped to the minimum or maximum value of the setting range.	Check the command that caused the warning.	Set the parameter within the setting range.	page 12-58
A.94C: Data Setting Warning 3 (Calculation Error)	The calculation result of the setting is not correct.	Check the command that caused the warning.	Set the parameter within the setting range.	page 12-58
A.94d: Data Setting Warning 4 (Parameter Size)	The parameter size set in the command is not correct.	Check the command that caused the warning.	Set the correct parameter size.	page 12-58
A.94E: Data Setting Warning 5 (Latch Mode Error)	A latch mode error was detected.	Check the command that caused the warning.	Change the setting of Pn850 or the LT_MOD data for the LTMOD_ON command sent by the host controller to an appropriate value. (This applies when using the MECHATROLINK-II-compatible profile.)	page 12-58

Continued on next page.

Continued from previous page.

Warning Number: Warning Name	Possible Cause	Confirmation	Correction	Reference
A.95A: Command Warning 1 (Unsatisfied Command Conditions)	The command conditions are not satisfied.	Check the command that caused the warning.	Send the command after the command conditions are satisfied.	page 12-58
A.95b: Command Warning 2 (Unsupported Command)	An unsupported command was received.	Check the command that caused the warning.	Do not send unsupported commands.	page 12-58
A.95d: Command Warning 4 (Command Interference)	The command sending conditions for latch-related commands was not satisfied.	Check the command that caused the warning.	Send the command after the command conditions are satisfied.	page 12-58
A.95E: Command Warning 5 (Subcommand Not Possible)	The command sending conditions for subcommands was not satisfied.	Check the command that caused the warning.	Send the command after the conditions are satisfied.	page 12-58
A.95F: Command Warning 6 (Undefined Command)	An undefined command was sent.	Check the command that caused the warning.	Do not send undefined commands.	page 12-58
A.960: MECHATROLINK Communications Warning	The MECHATROLINK-III Communications Cable (RJ-45) is not wired correctly.	Check the wiring conditions.	Correct the MECHATROLINK-III Communications Cable (RJ-45) wiring.	page 4-43
	A MECHATROLINK data reception error occurred due to noise.	Confirm the installation conditions.	Implement the following countermeasures against noise. • Check the MECHATROLINK-III Communications Cable (RJ-45) and FG wiring and implement countermeasures to prevent noise from entering. • Attach a ferrite core to the MECHATROLINK-III Communications Cable (RJ-45).	–
	A failure occurred in the SERVOPACK.	–	The SERVOPACK may be faulty. Replace the SERVOPACK.	–

Continued on next page.

Continued from previous page.

Warning Number: Warning Name	Possible Cause	Confirmation	Correction	Reference
A.971: Undervoltage	For a 200-V SERVOPACK, the AC power supply voltage dropped below 140 V.	Measure the power supply voltage.	Set the power supply voltage within the specified range.	–
	For a 100-V SERVOPACK, the AC power supply voltage dropped below 60 V.	Measure the power supply voltage.	Set the power supply voltage within the specified range.	–
	The power supply voltage dropped during operation.	Measure the power supply voltage.	Increase the power supply capacity.	–
	A momentary power interruption occurred.	Measure the power supply voltage.	If you have changed the setting of Pn509 (Momentary Power Interruption Hold Time), decrease the setting.	page 6-16
	The SERVOPACK fuse is blown out.	–	Replace the SERVOPACK and connect a reactor.	page 4-24
	A failure occurred in the SERVOPACK.	–	The SERVOPACK may be faulty. Replace the SERVOPACK.	–
A.97A: Command Warning 7 (Phase Error)	A command that cannot be executed in the current phase was sent.	–	Send the command after the command conditions are satisfied.	–
A.97b: Data Clamp Out of Range	The set command data was clamped to the minimum or maximum value of the setting range.	–	Set the command data within the setting ranges.	–
A.9A0: Overtravel (Overtravel status was detected.)	Overtravel was detected while the servo was ON.	Check the status of the overtravel signals on the input signal monitor.	Even if an overtravel signal is not shown by the input signal monitor, momentary overtravel may have been detected. Take the following precautions. • Do not specify movements that would cause overtravel from the host controller. • Check the wiring of the overtravel signals. • Implement countermeasures against noise.	page 5-32
A.9b0: Preventative Maintenance Warning	One of the consumable parts has reached the end of its service life.	–	Replace the part. Contact your Yaskawa representative for replacement.	page 9-17

12.4 Monitoring Communications Data during Alarms or Warnings

You can monitor the command data that is received when an alarm or warning occurs, such as a data setting warning (A.94□) or a command warning (A.95□) by using the following parameters. The following is an example of the data when an alarm or warning has occurred in the normal state.

Command Data during Alarms and Warnings: Pn890 to Pn8A6
Response Data during Alarms and Warnings: Pn8A8 to Pn8BE

Command Byte Sequence	Command Data Storage When an Alarm or Warning Occurs	
	CMD	RSP
0	Pn890 = n.□□□□□□XX	Pn8A8 = n.□□□□□□XX
1	Pn890 = n.□□□□XX□□	Pn8A8 = n.□□□□XX□□
2	Pn890 = n.□□XX□□□□	Pn8A8 = n.□□XX□□□□
3	Pn890 = n.XX□□□□□□	Pn8A8 = n.XX□□□□□□
4 to 7	Pn892	Pn8AA
8 to 11	Pn894	Pn8AC
12 to 15	Pn896	Pn8AE
16 to 19	Pn898	Pn8B0
20 to 23	Pn89A	Pn8B2
24 to 27	Pn89C	Pn8B4
28 to 31	Pn89E	Pn8B6
32 to 35	Pn8A0	Pn8B8
36 to 39	Pn8A2	Pn8BA
40 to 43	Pn8A4	Pn8BC
44 to 47	Pn8A6	Pn8BE

Note: 1. Data is stored in little endian byte order and displayed in the hexadecimal.
2. Refer to the following manual for command details.
Σ-7-Series MECHATROLINK-III Communications Standard Servo Profile Command Manual (Manual No.: SIEP S800001 31)

12.5 Troubleshooting Based on the Operation and Conditions of the Servomotor

This section provides troubleshooting based on the operation and conditions of the Servomotor, including causes and corrections.

Problem	Possible Cause	Confirmation	Correction	Reference
Servomotor Does Not Start	The control power supply is not turned ON.	Measure the voltage between control power supply terminals.	Turn OFF the power supply to the servo system. Correct the wiring so that the control power supply is turned ON.	–
	The main circuit power supply is not turned ON.	Measure the voltage across the main circuit power input terminals.	Turn OFF the power supply to the servo system. Correct the wiring so that the main circuit power supply is turned ON.	–
	The I/O signal connector (CN1) pins are not wired correctly or are disconnected.	Turn OFF the power supply to the servo system. Check the wiring condition of the I/O signal connector (CN1) pins.	Correct the wiring of the I/O signal connector (CN1) pins.	page 6-4, page 9-5
	The wiring for the Servomotor Main Circuit Cables or Encoder Cable is disconnected.	Check the wiring conditions.	Turn OFF the power supply to the servo system. Wire the cable correctly.	–
	There is an overload on the Servomotor.	Operate the Servomotor with no load and check the load status.	Turn OFF the power supply to the servo system. Reduce the load or replace the Servomotor with a Servomotor with a larger capacity.	–
	The type of encoder that is being used does not agree with the setting of Pn002 = n.□X□□ (Encoder Usage).	Check the type of the encoder that is being used and the setting of Pn002 = n.□X□□.	Set Pn002 = n.□X□□ according to the type of the encoder that is being used.	page 6-33
	There is a mistake in the input signal allocations (Pn50A, Pn50B, Pn511, and Pn516).	Check the input signal allocations (Pn50A, Pn50B, Pn511, and Pn516).	Correctly allocate the input signals (Pn50A, Pn50B, Pn511, and Pn516).	page 6-4, page 9-5
	The SV_ON command was not sent.	Check the commands sent from the host controller.	Send the SV_ON command from the host controller.	–
	The SENS_ON (Turn ON Sensor) command was not sent.	Check the commands sent from the host controller.	Send the commands to the SERVOPACK in the correct sequence.	–
	The P-OT (Forward Drive Prohibit) or N-OT (Reverse Drive Prohibit) signal is still OFF.	Check the P-OT and N-OT signals.	Turn ON the P-OT and N-OT signals.	page 9-5
	The safety input signals (/HWBB1 or /HWBB2) were not turned ON.	Check the /HWBB1 and /HWBB2 input signals.	Turn ON the /HWBB1 and /HWBB2 input signals. If you are not using the safety function, connect the Safety Jumper Connector (provided as an accessory) to CN8.	page 9-5

Continued on next page.

Continued from previous page.

Problem	Possible Cause	Confirmation	Correction	Reference
Servomotor Does Not Start	The FSTP (Forced Stop Input) signal is still OFF.	Check the FSTP signal.	• Turn ON the FSTP signal. • If you will not use the function to force the motor to stop, set Pn516 = n.□□□X (FSTP (Forced Stop Input) Signal Allocation) to disable the signal.	page 9-5
	A failure occurred in the SERVOPACK.	–	Turn OFF the power supply to the servo system. Replace the SERVOPACK.	–
	The polarity detection was not executed.	Check the setting of Pn080 =n.□□□X (Polarity Sensor Selection).	Correct the parameter setting.	page 5-25
		Check the inputs to the SV_ON (Servo ON) command.	• If you are using an incremental linear encoder, send the SV_ON command from the host controller. • If you are using an absolute linear encoder, execute polarity detection.	page 5-26
Servomotor Moves Instantaneously, and Then Stops	There is a mistake in the Servomotor wiring.	Turn OFF the power supply to the servo system. Check the wiring.	Wire the Servomotor correctly.	–
	There is a mistake in the wiring of the encoder or Serial Converter Unit.	Turn OFF the power supply to the servo system. Check the wiring.	Wire the Serial Converter Unit correctly.	–
	There is a mistake in the linear encoder wiring.	Turn OFF the power supply to the servo system. Check the wiring.	Wire the cable correctly.	–
	The setting of Pn282 (Linear Encoder Pitch) is not correct.	Check the setting of Pn282.	Correct the setting of Pn282.	page 5-18
	The count-up direction of the linear encoder does not match the forward direction of the Moving Coil in the motor.	Check the directions.	Change the setting of Pn080 = n.□□X□ (Motor Phase Selection). Place the linear encoder and motor in the same direction.	page 5-23
	Polarity detection was not performed correctly.	Check to see if electrical angle 2 (electrical angle from polarity origin) at any position is between ±10°.	Correct the settings for the polarity detection-related parameters.	–
Servomotor Speed Is Unstable	There is a faulty connection in the Servomotor wiring.	The connector connections for the power line (U, V, and W phases) and the encoder or Serial Converter Unit may be unstable. Turn OFF the power supply to the servo system. Check the wiring.	Tighten any loose terminals or connectors and correct the wiring.	–

Continued on next page.

Continued from previous page.

Problem	Possible Cause	Confirmation	Correction	Reference
Servomotor Moves without a Reference Input	A failure occurred in the SERVOPACK.	–	Turn OFF the power supply to the servo system. Replace the SERVOPACK.	–
	The count-up direction of the linear encoder does not match the forward direction of the Moving Coil in the motor.	Check the directions.	Change the setting of Pn080 = n.□□X□ (Motor Phase Selection). Match the linear encoder direction and Servomotor direction.	page 5-23
	Polarity detection was not performed correctly.	Check to see if electrical angle 2 (electrical angle from polarity origin) at any position is between ±10°.	Correct the settings for the polarity detection-related parameters.	–
Dynamic Brake Does Not Operate	The setting of Pn001 = n.□□□X (Servo OFF or Alarm Group 1 Stopping Method) is not suitable.	Check the setting of Pn001 = n.□□□X.	Set Pn001 = n.□□□X correctly.	–
	The dynamic brake resistor is disconnected.	Check the moment of inertia, motor speed, and dynamic brake frequency of use. If the moment of inertia, motor speed, or dynamic brake frequency of use is excessive, the dynamic brake resistance may be disconnected.	Turn OFF the power supply to the servo system. Replace the SERVOPACK. To prevent disconnection, reduce the load.	–
	There was a failure in the dynamic brake drive circuit.	–	There is a defective component in the dynamic brake circuit. Turn OFF the power supply to the servo system. Replace the SERVOPACK.	–

Continued on next page.

Continued from previous page.

Problem	Possible Cause	Confirmation	Correction	Reference
Abnormal Noise from Servomotor	The Servomotor vibrated considerably while performing the tuning-less function with the default settings.	Check the waveform of the motor speed.	Reduce the load so that the moment of inertia ratio or mass ratio is within the allowable value, or increase the load level or reduce the rigidity level in the tuning-less level settings. If the situation is not improved, disable the tuning-less function (i.e., set Pn170 to n.□□□0) and execute autotuning either with or without a host reference.	page 8-12
	The machine mounting is not secure.	Turn OFF the power supply to the servo system. Check to see if there are any loose mounting screws.	Tighten the mounting screws.	–
		Turn OFF the power supply to the servo system. Check to see if there is misalignment in the coupling.	Align the coupling.	–
		Turn OFF the power supply to the servo system. Check to see if the coupling is balanced.	Balance the coupling.	–
	The bearings are defective.	Turn OFF the power supply to the servo system. Check for noise and vibration around the bearings.	Replace the Servomotor.	–
	There is a vibration source at the driven machine.	Turn OFF the power supply to the servo system. Check for any foreign matter, damage, or deformation in the machine's moving parts.	Consult with the machine manufacturer.	–
	Noise interference occurred because of incorrect I/O signal cable specifications.	Turn OFF the power supply to the servo system. Check the I/O signal cables to see if they satisfy specifications. Use shielded twisted-pair wire cables or screened twisted-pair cables with conductors of at least 0.12 mm^2.	Use cables that satisfy the specifications.	–
	Noise interference occurred because an I/O signal cable is too long.	Turn OFF the power supply to the servo system. Check the lengths of the I/O signal cables.	The I/O signal cables must be no longer than 3 m.	–

Continued on next page.

Continued from previous page.

Problem	Possible Cause	Confirmation	Correction	Reference
Abnormal Noise from Servomotor	Noise interference occurred because of incorrect Encoder Cable specifications.	Turn OFF the power supply to the servo system. Make sure that the rotary or Linear Encoder Cable satisfies the specifications. Use a shielded twisted-pair wire cable or a screened twisted-pair cable with conductors of at least 0.12 mm^2.	Use cables that satisfy the specifications.	–
	Noise interference occurred because the Encoder Cable is too long.	Turn OFF the power supply to the servo system. Check the length of the Encoder Cable.	• Rotary Servomotors: The Encoder Cable length must be 50 m max. • Linear Servomotors: Make sure that the Serial Converter Unit cable is no longer than 20 m and that the Linear Encoder Cable and the Sensor Cable are no longer than 15 m each.	–
	Noise interference occurred because the Encoder Cable is damaged.	Turn OFF the power supply to the servo system. Check the Encoder Cable to see if it is pinched or the sheath is damaged.	Replace the Encoder Cable and correct the cable installation environment.	–
	The Encoder Cable was subjected to excessive noise interference.	Turn OFF the power supply to the servo system. Check to see if the Encoder Cable is bundled with a high-current line or installed near a high-current line.	Correct the cable layout so that no surge is applied by high-current lines.	–
	There is variation in the FG potential because of the influence of machines on the Servomotor side, such as a welder.	Turn OFF the power supply to the servo system. Check to see if the machines are correctly grounded.	Properly ground the machines to separate them from the FG of the encoder.	–
	There is a SERVOPACK pulse counting error due to noise.	Check to see if there is noise interference on the signal line from the encoder.	Turn OFF the power supply to the servo system. Implement countermeasures against noise for the encoder wiring.	–
	The encoder was subjected to excessive vibration or shock.	Turn OFF the power supply to the servo system. Check to see if vibration from the machine occurred. Check the Servomotor installation (mounting surface precision, securing state, and alignment). Check the linear encoder installation (mounting surface precision and securing method).	Reduce machine vibration. Improve the mounting state of the Servomotor or linear encoder.	–
	A failure occurred in the encoder.	–	Turn OFF the power supply to the servo system. Replace the Servomotor.	–

Continued on next page.

Continued from previous page.

Problem	Possible Cause	Confirmation	Correction	Reference
Abnormal Noise from Servomotor	A failure occurred in the Serial Converter Unit.	–	Turn OFF the power supply to the servo system. Replace the Serial Converter Unit.	–
	A failure occurred in the linear encoder.	–	Turn OFF the power supply to the servo system. Replace the linear encoder.	–
Servomotor Vibrates at Frequency of Approx. 200 to 400 Hz.	The servo gains are not balanced.	Check to see if the servo gains have been correctly tuned.	Perform autotuning without a host reference.	page 8-24
	The setting of Pn100 (Speed Loop Gain) is too high.	Check the setting of Pn100. The default setting is Kv = 40.0 Hz.	Set Pn100 to an appropriate value.	–
	The setting of Pn102 (Position Loop Gain) is too high.	Check the setting of Pn102. The default setting is Kp = 40.0/s.	Set Pn102 to an appropriate value.	–
	The setting of Pn101 (Speed Loop Integral Time Constant) is not appropriate.	Check the setting of Pn101. The default setting is Ti = 20.0 ms.	Set Pn101 to an appropriate value.	–
	The setting of Pn103 (Moment of Inertia Ratio or Mass Ratio) is not appropriate.	Check the setting of Pn103.	Set Pn103 to an appropriate value.	–
Large Motor Speed Overshoot on Starting and Stopping	The servo gains are not balanced.	Check to see if the servo gains have been correctly tuned.	Perform autotuning without a host reference.	page 8-24
	The setting of Pn100 (Speed Loop Gain) is too high.	Check the setting of Pn100. The default setting is Kv = 40.0 Hz.	Set Pn100 to an appropriate value.	–
	The setting of Pn102 (Position Loop Gain) is too high.	Check the setting of Pn102. The default setting is Kp = 40.0/s.	Set Pn102 to an appropriate value.	–
	The setting of Pn101 (Speed Loop Integral Time Constant) is not appropriate.	Check the setting of Pn101. The default setting is Ti = 20.0 ms.	Set Pn101 to an appropriate value.	–
	The setting of Pn103 (Moment of Inertia Ratio or Mass Ratio) is not appropriate.	Check the setting of Pn103.	Set Pn103 to an appropriate value.	–
	The torque reference is saturated.	Check the waveform of the torque reference.	Use the mode switch.	–
	The force limits (Pn483 and Pn484) are set to the default values.	The default values of the force limits and Pn483 = 30% and Pn484 = 30%.	Set Pn483 and Pn484 to appropriate values.	page 6-28

Continued on next page.

Continued from previous page.

Problem	Possible Cause	Confirmation	Correction	Reference
Absolute Encoder Position Deviation Error (The position that was saved in the host controller when the power was turned OFF is different from the position when the power was next turned ON.)	Noise interference occurred because of incorrect Encoder Cable specifications.	Turn OFF the power supply to the servo system. Check the Encoder Cable to see if it satisfies specifications. Use a shielded twisted-pair wire cable or a screened twisted-pair cable with conductors of at least 0.12 mm^2.	Use cables that satisfy the specifications.	–
	Noise interference occurred because the Encoder Cable is too long.	Turn OFF the power supply to the servo system. Check the length of the Encoder Cable.	• Rotary Servomotors: The Encoder Cable length must be 50 m max. • Linear Servomotors: Make sure that the Serial Converter Unit cable is no longer than 20 m and that the Linear Encoder Cable and the Sensor Cable are no longer than 15 m each.	–
	Noise interference occurred because the Encoder Cable is damaged.	Turn OFF the power supply to the servo system. Check the Encoder Cable to see if it is pinched or the sheath is damaged.	Replace the Encoder Cable and correct the cable installation environment.	–
	The Encoder Cable was subject to excessive noise interference.	Turn OFF the power supply to the servo system. Check to see if the Encoder Cable is bundled with a high-current line or installed near a high-current line.	Correct the cable layout so that no surge is applied by high-current lines.	–
	There is variation in the FG potential because of the influence of machines on the Servomotor side, such as a welder.	Turn OFF the power supply to the servo system. Check to see if the machines are correctly grounded.	Properly ground the machines to separate them from the FG of the encoder.	–

Continued on next page.

Continued from previous page.

Problem	Possible Cause	Confirmation	Correction	Reference
Absolute Encoder Position Deviation Error (The position that was saved in the host controller when the power was turned OFF is different from the position when the power was next turned ON.)	There is a SERVOPACK pulse counting error due to noise.	Turn OFF the power supply to the servo system. Check to see if there is noise interference on the I/O signal line from the encoder or Serial Converter Unit.	Implement countermeasures against noise for the encoder or Serial Converter Unit wiring.	–
	The encoder was subjected to excessive vibration or shock.	Turn OFF the power supply to the servo system. Check to see if vibration from the machine occurred. Check the Servomotor installation (mounting surface precision, securing state, and alignment). Check the linear encoder installation (mounting surface precision and securing method).	Reduce machine vibration. Improve the mounting state of the Servomotor or linear encoder.	–
	A failure occurred in the encoder.	–	Turn OFF the power supply to the servo system. Replace the Servomotor or linear encoder.	–
	A failure occurred in the SERVOPACK.	–	Turn OFF the power supply to the servo system. Replace the SERVOPACK.	–
	Host Controller Multiturn Data or Absolute Encoder Position Data Reading Error	Check the error detection section of the host controller.	Correct the error detection section of the host controller.	–
		Check to see if the host controller is executing data parity checks.	Perform parity checks for the multiturn data or absolute encoder position data.	–
		Check for noise interference in the cable between the SERVOPACK and the host controller.	Implement countermeasures against noise and then perform parity checks again for the multiturn data or absolute encoder position data.	–
Overtravel Occurred	The P-OT/N-OT (Forward Drive Prohibit or Reverse Drive Prohibit) signal was input.	Check the external power supply (+24 V) voltage for the input signals.	Correct the external power supply (+24 V) voltage for the input signals.	–
		Check the operating condition of the overtravel limit switches.	Make sure that the overtravel limit switches operate correctly.	–
		Check the wiring of the overtravel limit switches.	Correct the wiring of the overtravel limit switches.	page 5-29
		Check the settings of the overtravel input signal allocations (Pn50A/Pn50B).	Set the parameters to correct values.	page 5-29

Continued on next page.

Continued from previous page.

Problem	Possible Cause	Confirmation	Correction	Reference
Overtravel Occurred	The P-OT/N-OT (Forward Drive Prohibit or Reverse Drive Prohibit) signal malfunctioned.	Check for fluctuation in the external power supply (+24 V) voltage for the input signals.	Eliminate fluctuation from the external power supply (+24 V) voltage for the input signals.	–
		Check to see if the operation of the overtravel limit switches is unstable.	Stabilize the operating condition of the overtravel limit switches.	–
		Check the wiring of the overtravel limit switches (e.g., check for cable damage and loose screws).	Correct the wiring of the overtravel limit switches.	–
	There is a mistake in the allocation of the P-OT or N-OT (Forward Drive Prohibit or Reverse Drive Prohibit) signal in Pn50A = n.X□□□ or Pn50B = n.□□□X.	Check to see if the P-OT signal is allocated in Pn50A = n.X□□□.	If another signal is allocated in Pn50A =n.X□□□, allocate the P-OT signal instead.	page 5-29
		Check to see if the N-OT signal is allocated in Pn50B = n.□□□X.	If another signal is allocated in Pn50B =n.□□□X, allocate the N-OT signal instead.	
	The selection of the Servomotor stopping method is not correct.	Check the servo OFF stopping method set in Pn001 = n.□□□X or Pn001 = n.□□X□.	Select a Servomotor stopping method other than coasting to a stop.	page 5-31
		Check the torque control stopping method set in Pn001 = n.□□□X or Pn001 = n.□□X□.	Select a Servomotor stopping method other than coasting to a stop.	
Improper Stop Position for Overtravel (OT) Signal	The limit switch position and dog length are not appropriate.	–	Install the limit switch at the appropriate position.	–
	The overtravel limit switch position is too close for the coasting distance.	–	Install the overtravel limit switch at the appropriate position.	–
Position Deviation (without Alarm)	Noise interference occurred because of incorrect Encoder Cable specifications.	Turn OFF the power supply to the servo system. Check the Encoder Cable to see if it satisfies specifications. Use a shielded twisted-pair wire cable or a screened twisted-pair cable with conductors of at least 0.12 mm^2.	Use cables that satisfy the specifications.	–
	Noise interference occurred because the Encoder Cable is too long.	Turn OFF the power supply to the servo system. Check the length of the Encoder Cable.	• Rotary Servomotors: The Encoder Cable length must be 50 m max. • Linear Servomotors: Make sure that the Serial Converter Unit cable is no longer than 20 m and that the Linear Encoder Cable and the Sensor Cable are no longer than 15 m each.	–
	Noise interference occurred because the Encoder Cable is damaged.	Turn OFF the power supply to the servo system. Check the Encoder Cable to see if it is pinched or the sheath is damaged.	Replace the Encoder Cable and correct the cable installation environment.	–

Continued on next page.

Continued from previous page.

Problem	Possible Cause	Confirmation	Correction	Reference
Position Deviation (without Alarm)	The Encoder Cable was subjected to excessive noise interference.	Turn OFF the power supply to the servo system. Check to see if the Encoder Cable is bundled with a high-current line or installed near a high-current line.	Correct the cable layout so that no surge is applied by high-current lines.	–
	There is variation in the FG potential because of the influence of machines on the Servomotor side, such as a welder.	Turn OFF the power supply to the servo system. Check to see if the machines are correctly grounded.	Properly ground the machines to separate them from the FG of the encoder.	–
	There is a SERVOPACK pulse counting error due to noise.	Turn OFF the power supply to the servo system. Check to see if there is noise interference on the I/O signal line from the encoder or Serial Converter Unit.	Implement countermeasures against noise for the encoder wiring or Serial Converter Unit wiring.	–
	The encoder was subjected to excessive vibration or shock.	Turn OFF the power supply to the servo system. Check to see if vibration from the machine occurred. Check the Servomotor installation (mounting surface precision, securing state, and alignment). Check the linear encoder installation (mounting surface precision and securing method).	Reduce machine vibration. Improve the mounting state of the Servomotor or linear encoder.	–
	The coupling between the machine and Servomotor is not suitable.	Turn OFF the power supply to the servo system. Check to see if position offset occurs at the coupling between machine and Servomotor.	Correctly secure the coupling between the machine and Servomotor.	–
	Noise interference occurred because of incorrect I/O signal cable specifications.	Turn OFF the power supply to the servo system. Check the I/O signal cables to see if they satisfy specifications. Use a shielded twisted-pair wire cable or a screened twisted-pair cable with conductors of at least 0.12 mm^2.	Use cables that satisfy the specifications.	–
Position Deviation (without Alarm)	Noise interference occurred because an I/O signal cable is too long.	Turn OFF the power supply to the servo system. Check the lengths of the I/O signal cables.	The I/O signal cables must be no longer than 3 m.	–
	An encoder fault occurred. (The pulse count does not change.)	–	Turn OFF the power supply to the servo system. Replace the Servomotor or linear encoder.	–
	A failure occurred in the SERVOPACK.	–	Turn OFF the power supply to the servo system. Replace the SERVOPACK.	–

Continued on next page.

Continued from previous page.

Problem	Possible Cause	Confirmation	Correction	Reference
Servomotor Overheated	The surrounding air temperature is too high.	Measure the surrounding air temperature around the Servomotor.	Reduce the surrounding air temperature to 40°C or less.	–
	The surface of the Servomotor is dirty.	Turn OFF the power supply to the servo system. Visually check the surface for dirt.	Clean dirt, dust, and oil from the surface.	–
	There is an overload on the Servomotor.	Check the load status with a monitor.	If the Servomotor is overloaded, reduce the load or replace the Servo Drive with a SERVOPACK and Servomotor with larger capacities.	–
	Polarity detection was not performed correctly.	Check to see if electrical angle 2 (electrical angle from polarity origin) at any position is between ±10°.	Correct the settings for the polarity detection-related parameters.	–

Parameter Lists

13

This chapter provides information on the parameters.

13.1 List of Servo Parameters 13-2

13.1.1 Interpreting the Parameter Lists 13-2
13.1.2 List of Servo Parameters 13-3

13.2 List of MECHATROLINK-III Common Parameters . . 13-43

13.2.1 Interpreting the Parameter Lists 13-43
13.2.2 List of MECHATROLINK-III Common Parameters 13-43

13.3 Parameter Recording Table 13-52

13.1 List of Servo Parameters

13.1.1 Interpreting the Parameter Lists

The types of Servomotors to which the parameter applies.
- All: The parameter is used for both Rotary Servomotors and Linear Servomotors.
- Rotary: The parameter is used for only Rotary Servomotors.
- Linear: The parameter is used for only Linear Servomotors.

Rotary Servomotor terms are used for parameters that are applicable to all Servomotors. If you are using a Linear Servomotor, you need to interpret the terms accordingly. Refer to the following section for details.

☞ ◆ *Differences in Terms for Rotary Servomotors and Linear Servomotors* on page x

"After restart" indicates parameters that will be effective after one of the following is executed.
- The power supply is turned OFF and ON again.
- The CONFIG command is sent.
- A software reset is executed.

Parameter No.	Size	Name	Setting Range	Setting Unit	Default Setting	Applicable Motors	When Enabled	Classification	Reference
Pn000 M3	2	Basic Function Selections 0	0000h to 10B1h	–	0000h	All	After restart	Setup	–

There are the following two classifications.
- Setup
- Tuning

Refer to the following section for details.

☞ *5.1.1 Parameter Classification* on page 5-4

If there are differences in the parameters for Rotary Servomotor and Linear Servomotor, information is provided for both.
- Top row: For Rotary Servomotors
- Bottom row: For Linear Servomotors

n.□□□X	Rotation Direction Selection Movement Direction Selection		Reference
	0	Use CCW as the forward direction.	page 5-17
		Use the direction in which the linear encoder counts up as the forward direction.	
	1	Use CW as the forward direction. (Reverse Rotation Mode)	
		Use the direction in which the linear encoder counts down as the forward direction. (Reverse Movement Mode)	

Symbols are provided when a parameter is valid only for a specific profile.
- M2 Parameters that are valid only for a MECHATROLINK-II-compatible profile.
- M3 Parameters that are valid only for a MECHATROLINK-III standard servo profile.

n.X□□□	Rotary/Linear Servomotor Startup Selection When Encoder Is Not Connected		Reference
	0	When an encoder is not connected, start as SERVOPACK for Rotary Servomotor.	page 5-16
	1	When an encoder is not connected, start as SERVOPACK for Linear Servomotor.	

13.1.2 List of Servo Parameters

The following table lists the parameters.

Note: Do not change the following parameters from their default settings.
- Reserved parameters
- Parameters not given in this manual
- Parameters that are not valid for the Servomotor that you are using, as given in the parameter table

Parameter No.	Size	Name	Setting Range	Setting Unit	Default Setting	Applicable Motors	When Enabled	Classification	Reference
Pn000	2	Basic Function Selections 0	0000h to 10B1h	–	0000h	All	After restart	Setup	–

	Rotation Direction Selection / Movement Direction Selection		Reference
n.□□□X	0	Use CCW as the forward direction.	page 5-17
		Use the direction in which the linear encoder counts up as the forward direction.	
	1	Use CW as the forward direction. (Reverse Rotation Mode)	
		Use the direction in which the linear encoder counts down as the forward direction. (Reverse Movement Mode)	

n.□□X□	Reserved parameter (Do not change.)

n.□X□□	Reserved parameter (Do not change.)

	Rotary/Linear Servomotor Startup Selection When Encoder Is Not Connected		Reference
n.X□□□	0	When an encoder is not connected, start as SERVOPACK for Rotary Servomotor.	page 5-16
	1	When an encoder is not connected, start as SERVOPACK for Linear Servomotor.	

Parameter No.	Size	Name	Setting Range	Setting Unit	Default Setting	Applicable Motors	When Enabled	Classification	Reference
Pn001	2	Application Function Selections 1	0000h to 1142h	–	0000h	All	After restart	Setup	–

	Motor Stopping Method for Servo OFF and Group 1 Alarms		Reference
n.□□□X	0	Stop the motor by applying the dynamic brake.	page 5-39
	1	Stop the motor by the applying dynamic brake and then release the dynamic brake.	
	2	Coast the motor to a stop without the dynamic brake.	

	Overtravel Stopping Method		Reference
n.□□X□	0	Apply the dynamic brake or coast the motor to a stop (use the stopping method set in Pn001 = n.□□□X).	page 5-31
	1	Decelerate the motor to a stop using the torque set in Pn406 as the maximum torque and then servo-lock the motor.	
	2	Decelerate the motor to a stop using the torque set in Pn406 as the maximum torque and then let the motor coast.	
	3	Decelerate the motor to a stop using the deceleration time set in Pn30A and then servo-lock the motor.	
	4	Decelerate the motor to a stop using the deceleration time set in Pn30A and then let the motor coast.	

	Main Circuit Power Supply AC/DC Input Selection		Reference
n.□X□□	0	Input AC power as the main circuit power supply using the L1, L2, and L3 terminals (do not use shared converter).	page 5-14
	1	Input DC power as the main circuit power supply using the B1/⊕ and ⊖ 2 terminals or the B1 and ⊖ 2 terminals (use an external converter or the shared converter).	

n.X□□□	Reserved parameter (Do not change.)

Continued on next page.

Continued from previous page.

Parameter No.	Size	Name	Setting Range	Setting Unit	Default Setting	Applicable Motors	When Enabled	Classi-fication	Refer-ence
Pn002	2	Application Function Selections 2	0000h to 4213h	–	0011h	–	After restart	Setup	–

	MECHATROLINK Command Position and Speed Control Option		Applicable Motors	Reference
n.□□□X	0	Reserved setting (Do not use.)	All	*1
	1	Use TLIM as the torque limit.		
	2	Reserved setting (Do not use.)		
	3	Use P_TLIM or N_TLIM as the torque limit when P_CL or N_CL in the OPTION field is ON.		

	Torque Control Option		Applicable Motors	Reference
n.□□X□	0	Reserved setting (Do not use.)	All	*1
	1	Use the speed limit for torque control (VLIM) as the speed limit.		

	Encoder Usage		Applicable Motors	Reference
n.□X□□	0	Use the encoder according to encoder specifications.	All	page 6-33
	1	Use the encoder as an incremental encoder.		
	2	Use the encoder as a single-turn absolute encoder.	Rotary	

	External Encoder Usage		Applicable Motors	Reference
n.X□□□	0	Do not use an external encoder.	Rotary	page 10-6
	1	The external encoder moves in the forward direction for CCW motor rotation.		
	2	Reserved setting (Do not use.)		
	3	The external encoder moves in the reverse direction for CCW motor rotation.		
	4	Reserved setting (Do not use.)		

Continued on next page.

Continued from previous page.

Parameter No.	Size	Name	Setting Range	Setting Unit	Default Setting	Applicable Motors	When Enabled	Classi-fication	Refer-ence
Pn006	2	Application Function Selections 6	0000h to 105Fh	–	0002h	All	Immedi-ately	Setup	page 9-9

n.□□XX	Analog Monitor 1 Signal Selection	
	00	Motor speed (1 V/1,000 min^{-1})
		Motor speed (1 V/1,000 mm/s)
	01	Speed reference (1 V/1,000 min^{-1})
		Speed reference (1 V/1,000 mm/s)
	02	Torque reference (1 V/100% rated torque)
		Force reference (1 V/100% rated force)
	03	Position deviation (0.05 V/reference unit)
	04	Position amplifier deviation (after electronic gear) (0.05 V/encoder pulse unit)
		Position amplifier deviation (after electronic gear) (0.05 V/linear encoder pulse unit)
	05	Position reference speed (1 V/1,000 min^{-1})
		Position reference speed (1 V/1,000 mm/s)
	06	Reserved setting (Do not use.)
	07	Load-motor position deviation (0.01 V/reference unit)
	08	Positioning completion (positioning completed: 5 V, positioning not completed: 0 V)
	09	Speed feedforward (1 V/1,000 min^{-1})
		Speed feedforward (1 V/1,000 mm/s)
	0A	Torque feedforward (1 V/100% rated torque)
		Force feedforward (1 V/100% rated force)
	0B	Active gain (1st gain: 1 V, 2nd gain: 2 V)
	0C	Completion of position reference distribution (completed: 5 V, not completed: 0 V)
	0D	External encoder speed (1 V/1,000 min^{-1}: value at the motor shaft)
	0E	Reserved setting (Do not use.)
	0F	Reserved setting (Do not use.)
	10	Main circuit DC voltage
	11 to 5F	Reserved settings (Do not use.)
n.□X□□	Reserved parameter (Do not change.)	
n.X□□□	Reserved parameter (Do not change.)	

Continued on next page.

Continued from previous page.

Parameter No.	Size	Name	Setting Range	Setting Unit	Default Setting	Applicable Motors	When Enabled	Classi-fication	Refer-ence
Pn007	2	Application Function Selections 7	0000h to 105Fh	–	0000h	All	Immedi-ately	Setup	page 9-9

n.□□XX	Analog Monitor 2 Signal Selection	
	00	Motor speed (1 V/1,000 min^{-1})
		Motor speed (1 V/1,000 mm/s)
	01	Speed reference (1 V/1,000 min^{-1})
		Speed reference (1 V/1,000 mm/s)
	02	Torque reference (1 V/100% rated torque)
		Force reference (1 V/100% rated force)
	03	Position deviation (0.05 V/reference unit)
	04	Position amplifier deviation (after electronic gear) (0.05 V/encoder pulse unit)
		Position amplifier deviation (after electronic gear) (0.05 V/linear encoder pulse unit)
	05	Position reference speed (1 V/1,000 min^{-1})
		Position reference speed (1 V/1,000 mm/s)
	06	Reserved setting (Do not use.)
	07	Load-motor position deviation (0.01 V/reference unit)
	08	Positioning completion (positioning completed: 5 V, positioning not completed: 0 V)
	09	Speed feedforward (1 V/1,000 min^{-1})
		Speed feedforward (1 V/1,000 mm/s)
	0A	Torque feedforward (1 V/100% rated torque)
		Force feedforward (1 V/100% rated force)
	0B	Active gain (1st gain: 1 V, 2nd gain: 2 V)
	0C	Completion of position reference distribution (completed: 5 V, not completed: 0 V)
	0D	External encoder speed (1 V/1,000 min^{-1}: value at the motor shaft)
	0E	Reserved setting (Do not use.)
	0F	Reserved setting (Do not use.)
	10	Main circuit DC voltage
	11 to 5F	Reserved settings (Do not use.)
n.□X□□	Reserved parameter (Do not change.)	
n.X□□□	Reserved parameter (Do not change.)	

Parameter No.	Size	Name	Setting Range	Setting Unit	Default Setting	Applicable Motors	When Enabled	Classi-fication	Refer-ence
Pn008	2	Application Function Selections 8	0000h to 7121h	–	4000h	Rotary	After restart	Setup	–

n.□□□X	Low Battery Voltage Alarm/Warning Selection		Reference
	0	Output alarm (A.830) for low battery voltage.	page 12-2
	1	Output warning (A.930) for low battery voltage.	

n.□□X□	Function Selection for Undervoltage		Reference
	0	Do not detect undervoltage.	page 6-17
	1	Detect undervoltage warning and limit torque at host controller.	
	2	Detect undervoltage warning and limit torque with Pn424 and Pn425 (i.e., only in SERVOPACK).	

n.□X□□	Warning Detection Selection		Reference
	0	Detect warnings.	page 12-49
	1	Do not detect warnings except for A.971.	
n.X□□□	Reserved parameter (Do not change.)		

Continued on next page.

Continued from previous page.

Parameter No.	Size	Name	Setting Range	Setting Unit	Default Setting	Applicable Motors	When Enabled	Classi-fication	Refer-ence
Pn009	2	Application Function Selections 9	0000h to 0121h	–	0010h	All	After restart	Tuning	–

n.□□□X	Reserved parameter (Do not change.)	

	Current Control Mode Selection		Reference
n.□□X□	0	Use current control mode 1.	page 8-73
	1	• SERVOPACK Models SGD7S-R70A, -R90A, -1R6A, -2R8A, -3R8A, -5R5A, and -7R6A: Use current control mode 1. • SERVOPACK Models SGD7S-120A, -180A, -200A, -330A, -470A, -550A, -590A, and -780A: Use current control mode 2.	
	2	Use current control mode 2.	

	Speed Detection Method Selection		Reference
n.□X□□	0	Use speed detection 1.	page 8-70
	1	Use speed detection 2.	

n.X□□□	Reserved parameter (Do not change.)	

Parameter No.	Size	Name	Setting Range	Setting Unit	Default Setting	Applicable Motors	When Enabled	Classi-fication	Refer-ence
Pn00A	2	Application Function Selections A	0000h to 1244h	–	0001h	All	After restart	Setup	–

	Motor Stopping Method for Group 2 Alarms		Reference
n.□□□X	0	Apply the dynamic brake or coast the motor to a stop (use the stopping method set in Pn001 = n.□□□X).	page 5-40
	1	Decelerate the motor to a stop using the torque set in Pn406 as the maximum torque. Use the setting of Pn001 = n.□□□X for the status after stopping.	
	2	Decelerate the motor to a stop using the torque set in Pn406 as the maximum torque and then let the motor coast.	
	3	Decelerate the motor to a stop using the deceleration time set in Pn30A. Use the setting of Pn001 = n.□□□X for the status after stopping.	
	4	Decelerate the motor to a stop using the deceleration time set in Pn30A and then let the motor coast.	

	Stopping Method for Forced Stops		Reference
n.□□X□	0	Apply the dynamic brake or coast the motor to a stop (use the stopping method set in Pn001 = n.□□□X).	page 6-59
	1	Decelerate the motor to a stop using the torque set in Pn406 as the maximum torque. Use the setting of Pn001 = n.□□□X for the status after stopping.	
	2	Decelerate the motor to a stop using the torque set in Pn406 as the maximum torque and then let the motor coast.	
	3	Decelerate the motor to a stop using the deceleration time set in Pn30A. Use the setting of Pn001 = n.□□□X for the status after stopping.	
	4	Decelerate the motor to a stop using the deceleration time set in Pn30A and then let the motor coast.	

n.□X□□	Reserved parameter (Do not change.)	

n.X□□□	Reserved parameter (Do not change.)	

Continued on next page.

Continued from previous page.

Parameter No.	Size	Name	Setting Range	Setting Unit	Default Setting	Applicable Motors	When Enabled	Classi-fication	Refer-ence
Pn00B	2	Application Function Selections B	0000h to 1121h	–	0000h	All	After restart	Setup	–

	Operator Parameter Display Selection		Reference
n.□□□X	0	Display only setup parameters.	page 5-4
	1	Display all parameters.	

	Motor Stopping Method for Group 2 Alarms		Reference
n.□□X□	0	Stop the motor by setting the speed reference to 0.	page 5-40
	1	Apply the dynamic brake or coast the motor to a stop (use the stopping method set in Pn001 = n.□□□X).	
	2	Set the stopping method with Pn00A = n.□□□X.	

	Power Input Selection for Three-phase SERVOPACK		Reference
n.□X□□	0	Use a three-phase power supply input.	page 5-15
	1	Use a three-phase power supply input as a single-phase power supply input.	

n.X□□□	Reserved parameter (Do not change.)

Parameter No.	Size	Name	Setting Range	Setting Unit	Default Setting	Applicable Motors	When Enabled	Classi-fication	Refer-ence
Pn00C	2	Application Function Selections C	0000h to 0131h	–	0000h	–	After restart	Setup	page 7-21

	Function Selection for Test without a Motor		Applicable Motors
n.□□□X	0	Disable tests without a motor.	All
	1	Enable tests without a motor.	

	Encoder Resolution for Tests without a Motor		Applicable Motors
n.□□X□	0	Use 13 bits.	Rotary
	1	Use 20 bits.	
	2	Use 22 bits.	
	3	Use 24 bits.	

	Encoder Type Selection for Tests without a Motor		Applicable Motors
n.□X□□	0	Use an incremental encoder.	All
	1	Use an absolute encoder.	

n.X□□□	Reserved parameter (Do not change.)

Parameter No.	Size	Name	Setting Range	Setting Unit	Default Setting	Applicable Motors	When Enabled	Classi-fication	Refer-ence
Pn00D	2	Application Function Selections D	0000h to 1001h	–	0000h	All	After restart	Setup	page 5-32

n.□□□X	Reserved parameter (Do not change.)
n.□□X□	Reserved parameter (Do not change.)
n.□X□□	Reserved parameter (Do not change.)

	Overtravel Warning Detection Selection	
n.X□□□	0	Do not detect overtravel warnings.
	1	Detect overtravel warnings.

Continued on next page.

Continued from previous page.

Parameter No.	Size	Name	Setting Range	Setting Unit	Default Setting	Applicable Motors	When Enabled	Classi-fication	Refer-ence
Pn00F	2	Application Function Selections F	0000h to 2011h	–	0000h	All	After restart	Setup	–

n.□□□X	Preventative Maintenance Warning Selection		Reference
	0	Do not detect preventative maintenance warnings.	page 9-17
	1	Detect preventative maintenance warnings.	
n.□□X□	Reserved parameter (Do not change.)		
n.□X□□	Reserved parameter (Do not change.)		
n.X□□□	Reserved parameter (Do not change.)		

Pn021	2	Reserved parameter (Do not change.)	–	–	0000h	All	–	–	–
Pn022	2	Reserved parameter (Do not change.)	–	–	0000h	All	–	–	–
Pn040	2	Σ-V Compatible Func-tion Switch	0000h to 2111h	–	0000h	–	After restart	Setup	–

n.□□□X	Communications Interface Compatibility Selection		Applicable Motors
	0	Perform Σ-7 communications.	All
	1	Perform Σ-V communications.	

n.□□X□	Encoder Resolution Compatibility Selection		Applicable Motors
	0	Use the encoder resolution of the connected motor.	Rotary
	1	Use a resolution of 20 bits when connected to an SGM7J, SGM7A, SGM7P, SGM7G, SGM7E, or SGM7F motor.	
n.□X□□	Reserved parameter (Do not change.)		
n.X□□□	Reserved parameter (Do not change.)		

Pn080	2	Application Function Selections 80	0000h to 1111h	–	0000h	Linear	After restart	Setup	–

n.□□□X	Polarity Sensor Selection		Reference
	0	Use polarity sensor.	page 5-25
	1	Do not use polarity sensor.	
n.□□X□	Motor Phase Sequence Selection		Reference
	0	Set a phase-A lead as a phase sequence of U, V, and W.	page 5-23
	1	Set a phase-B lead as a phase sequence of U, V, and W.	
n.□X□□	Reserved parameter (Do not change.)		
n.X□□□	Calculation Method for Maximum Speed or Encoder Output Pulses		Reference
	0	Calculate the encoder output pulse setting for a fixed maximum speed.	page 14-5
	1	Calculate the maximum speed for a fixed encoder output pulse setting.	

Continued on next page.

Continued from previous page.

Parameter No.	Size	Name	Setting Range	Setting Unit	Default Setting	Applicable Motors	When Enabled	Classi-fication	Refer-ence
Pn081	2	Application Function Selections 81	0000h to 1111h	–	0000h	All	After restart	Setup	page 6-22

n.□□□X	Phase-C Pulse Output Selection	
	0	Output phase-C pulses only in the forward direction.
	1	Output phase-C pulses in both the forward and reverse directions.
n.□□X□	Reserved parameter (Do not change.)	
n.□X□□	Reserved parameter (Do not change.)	
n.X□□□	Reserved parameter (Do not change.)	

Pn100	2	Speed Loop Gain	10 to 20,000	0.1 Hz	400	All	Immedi-ately	Tuning	page 8-81
Pn101	2	Speed Loop Integral Time Constant	15 to 51,200	0.01 ms	2000	All	Immedi-ately	Tuning	page 8-81
Pn102	2	Position Loop Gain	10 to 20,000	0.1/s	400	All	Immedi-ately	Tuning	page 8-81
Pn103	2	Moment of Inertia Ratio	0 to 20,000	1%	100	All	Immedi-ately	Tuning	page 8-81
Pn104	2	Second Speed Loop Gain	10 to 20,000	0.1 Hz	400	All	Immedi-ately	Tuning	page 8-66
Pn105	2	Second Speed Loop Integral Time Constant	15 to 51,200	0.01 ms	2000	All	Immedi-ately	Tuning	page 8-66
Pn106	2	Second Position Loop Gain	10 to 20,000	0.1/s	400	All	Immedi-ately	Tuning	page 8-66
Pn109	2	Feedforward	0 to 100	1%	0	All	Immedi-ately	Tuning	page 8-91
Pn10A	2	Feedforward Filter Time Constant	0 to 6,400	0.01 ms	0	All	Immedi-ately	Tuning	page 8-91
Pn10B	2	Gain Application Selec-tions	0000h to 5334h	–	0000h	All	–	Setup	–

n.□□□X	Mode Switching Selection		When Enabled	Reference
	0	Use the internal torque reference as the condition (level setting: Pn10C).	Immedi-ately	page 8-92
	1	Use the speed reference as the condition (level set-ting: Pn10D).		
		Use the speed reference as the condition (level set-ting: Pn181).		
	2	Use the acceleration reference as the condition (level setting: Pn10E).		
		Use the acceleration reference as the condition (level setting: Pn182).		
	3	Use the position deviation as the condition (level set-ting: Pn10F).		
	4	Do not use mode switching.		

n.□□X□	Speed Loop Control Method		When Enabled	Reference
	0	PI control	After restart	page 8-87
	1	I-P control		
	2 and 3	Reserved settings (Do not use.)		
n.□X□□	Reserved parameter (Do not change.)			
n.X□□□	Reserved parameter (Do not change.)			

Continued on next page.

Continued from previous page.

Parameter No.	Size	Name	Setting Range	Setting Unit	Default Setting	Applicable Motors	When Enabled	Classification	Reference
Pn10C	2	Mode Switching Level for Torque Reference	0 to 800	1%	200	All	Immediately	Tuning	page 8-92
Pn10D	2	Mode Switching Level for Speed Reference	0 to 10,000	1 min^{-1}	0	Rotary	Immediately	Tuning	page 8-92
Pn10E	2	Mode Switching Level for Acceleration	0 to 30,000	1 min^{-1}/s	0	Rotary	Immediately	Tuning	page 8-92
Pn10F	2	Mode Switching Level for Position Deviation	0 to 10,000	1 reference unit	0	All	Immediately	Tuning	page 8-92
Pn11F	2	Position Integral Time Constant	0 to 50,000	0.1 ms	0	All	Immediately	Tuning	page 8-94
Pn121	2	Friction Compensation Gain	10 to 1,000	1%	100	All	Immediately	Tuning	page 8-66, page 8-70
Pn122	2	Second Friction Compensation Gain	10 to 1,000	1%	100	All	Immediately	Tuning	page 8-66, page 8-70
Pn123	2	Friction Compensation Coefficient	0 to 100	1%	0	All	Immediately	Tuning	page 8-70
Pn124	2	Friction Compensation Frequency Correction	-10,000 to 10,000	0.1 Hz	0	All	Immediately	Tuning	page 8-70
Pn125	2	Friction Compensation Gain Correction	1 to 1,000	1%	100	All	Immediately	Tuning	page 8-70
Pn131	2	Gain Switching Time 1	0 to 65,535	1 ms	0	All	Immediately	Tuning	page 8-66
Pn132	2	Gain Switching Time 2	0 to 65,535	1 ms	0	All	Immediately	Tuning	page 8-66
Pn135	2	Gain Switching Waiting Time 1	0 to 65,535	1 ms	0	All	Immediately	Tuning	page 8-66
Pn136	2	Gain Switching Waiting Time 2	0 to 65,535	1 ms	0	All	Immediately	Tuning	page 8-66
Pn139	2	Automatic Gain Switching Selections 1	0000h to 0052h	–	0000h	All	Immediately	Tuning	page 8-66

	Gain Switching Selection	
n.□□□X	0	Use manual gain switching. The gain is switched manually with G-SEL in the servo command output signals (SVCMD_IO).
	1	Reserved setting (Do not use.)
	2	Use automatic gain switching pattern 1. The gain is switched automatically from the first gain to the second gain when switching condition A is satisfied. The gain is switched automatically from the second gain to the first gain when switching condition A is not satisfied.

	Gain Switching Condition A	
n.□□X□	0	/COIN (Positioning Completion Output) signal turns ON.
	1	/COIN (Positioning Completion Output) signal turns OFF.
	2	/NEAR (Near Output) signal turns ON.
	3	/NEAR (Near Output) signal turns OFF.
	4	Position reference filter output is 0 and position reference input is OFF.
	5	Position reference input is ON.

n.□X□□	Reserved parameter (Do not change.)
n.X□□□	Reserved parameter (Do not change.)

Pn13D	2	Current Gain Level	100 to 2,000	1%	2000	All	Immediately	Tuning	page 8-74

Continued on next page.

Continued from previous page.

Parameter No.	Size	Name	Setting Range	Setting Unit	Default Setting	Applicable Motors	When Enabled	Classification	Reference
Pn140	2	Model Following Control-Related Selections	0000h to 1121h	–	0100h	All	Immediately	Tuning	–

	Model Following Control Selection		Reference
n.□□□X	0	Do not use model following control.	page 8-88
	1	Use model following control.	

	Vibration Suppression Selection		Reference
n.□□X□	0	Do not perform vibration suppression.	page 8-88
	1	Perform vibration suppression for a specific frequency.	
	2	Perform vibration suppression for two specific frequencies.	

	Vibration Suppression Adjustment Selection		Reference
n.□X□□	0	Do not adjust vibration suppression automatically during execution of autotuning without a host reference, autotuning with a host reference, and custom tuning.	page 8-32
	1	Adjust vibration suppression automatically during execution of autotuning without a host reference, autotuning with a host reference, and custom tuning.	

	Speed Feedforward (VFF)/Torque Feedforward (TFF) Selection		Reference
n.X□□□	0	Do not use model following control and speed/torque feedforward together.	page 8-33, page 8-59
	1	Use model following control and speed/torque feedforward together.	

Pn141	2	Model Following Control Gain	10 to 20,000	0.1/s	500	All	Immediately	Tuning	page 8-88
Pn142	2	Model Following Control Gain Correction	500 to 2,000	0.1%	1000	All	Immediately	Tuning	page 8-66
Pn143	2	Model Following Control Bias in the Forward Direction	0 to 10,000	0.1%	1000	All	Immediately	Tuning	page 8-88
Pn144	2	Model Following Control Bias in the Reverse Direction	0 to 10,000	0.1%	1000	All	Immediately	Tuning	page 8-88
Pn145	2	Vibration Suppression 1 Frequency A	10 to 2,500	0.1 Hz	500	All	Immediately	Tuning	page 8-59
Pn146	2	Vibration Suppression 1 Frequency B	10 to 2,500	0.1 Hz	700	All	Immediately	Tuning	page 8-59
Pn147	2	Model Following Control Speed Feedforward Compensation	0 to 10,000	0.1%	1000	All	Immediately	Tuning	page 8-88
Pn148	2	Second Model Following Control Gain	10 to 20,000	0.1/s	500	All	Immediately	Tuning	page 8-66
Pn149	2	Second Model Following Control Gain Correction	500 to 2,000	0.1%	1000	All	Immediately	Tuning	page 8-66
Pn14A	2	Vibration Suppression 2 Frequency	10 to 2,000	0.1 Hz	800	All	Immediately	Tuning	page 8-59
Pn14B	2	Vibration Suppression 2 Correction	10 to 1,000	1%	100	All	Immediately	Tuning	page 8-59

Continued on next page.

Continued from previous page.

Parameter No.	Size	Name	Setting Range	Setting Unit	Default Setting	Applicable Motors	When Enabled	Classification	Reference
Pn14F	2	Control-Related Selections	0000h to 0021h	–	0021h	All	After restart	Tuning	–

	Model Following Control Type Selection		Reference
n.□□□X	0	Use model following control type 1.	page 8-91
	1	Use model following control type 2.	

	Tuning-less Type Selection		Reference
n.□□X□	0	Use tuning-less type 1.	page 8-13
	1	Use tuning-less type 2.	
	2	Use tuning-less type 3.	

n.□X□□	Reserved parameter (Do not change.)
n.X□□□	Reserved parameter (Do not change.)

Pn160	2	Anti-Resonance Control-Related Selections	0000h to 0011h	–	0010h	All	Immediately	Tuning	–

	Anti-Resonance Control Selection		Reference
n.□□□X	0	Do not use anti-resonance control.	page 8-51
	1	Use anti-resonance control.	

	Anti-Resonance Control Adjustment Selection		Reference
n.□□X□	0	Do not adjust anti-resonance control automatically during execution of autotuning without a host reference, autotuning with a host reference, and custom tuning.	page 8-32
	1	Adjust anti-resonance control automatically during execution of autotuning without a host reference, autotuning with a host reference, and custom tuning.	

n.□X□□	Reserved parameter (Do not change.)
n.X□□□	Reserved parameter (Do not change.)

Pn161	2	Anti-Resonance Frequency	10 to 20,000	0.1 Hz	1000	All	Immediately	Tuning	page 8-51
Pn162	2	Anti-Resonance Gain Correction	1 to 1,000	1%	100	All	Immediately	Tuning	page 8-51
Pn163	2	Anti-Resonance Damping Gain	0 to 300	1%	0	All	Immediately	Tuning	page 8-51
Pn164	2	Anti-Resonance Filter Time Constant 1 Correction	-1,000 to 1,000	0.01 ms	0	All	Immediately	Tuning	page 8-51
Pn165	2	Anti-Resonance Filter Time Constant 2 Correction	-1,000 to 1,000	0.01 ms	0	All	Immediately	Tuning	page 8-51
Pn166	2	Anti-Resonance Damping Gain 2	0 to 1,000	1%	0	All	Immediately	Tuning	page 8-54

Continued on next page.

Continued from previous page.

Parameter No.	Size	Name	Setting Range	Setting Unit	Default Setting	Applicable Motors	When Enabled	Classification	Reference
Pn170	2	Tuning-less Function-Related Selections	0000h to 2711h	–	1401h	All	–	Setup	page 8-12

n.□□□X	Tuning-less Selection		When Enabled
	0	Disable tuning-less function.	After restart
	1	Enable tuning-less function.	

n.□□X□	Speed Control Method		When Enabled
	0	Use for speed control.	After restart
	1	Use for speed control and use host controller for position control.	

n.□X□□	Rigidity Level		When Enabled
	0 to 7	Set the rigidity level.	Immediately

n.X□□□	Tuning-less Load Level		When Enabled
	0 to 2	Set the load level for the tuning-less function.	Immediately

Pn181	2	Mode Switching Level for Speed Reference	0 to 10,000	1 mm/s	0	Linear	Immediately	Tuning	page 8-92
Pn182	2	Mode Switching Level for Acceleration	0 to 30,000	1 mm/s^2	0	Linear	Immediately	Tuning	page 8-92
Pn205	2	Multiturn Limit	0 to 65,535	1 rev	65535	Rotary	After restart	Setup	page 6-39
Pn207	2	Position Control Function Selections	0000h to 2210h	–	0010h	All	After restart	Setup	–

n.□□□X	Reserved parameter (Do not change.)	
n.□□X□	Reserved parameter (Do not change.)	
n.□X□□	Reserved parameter (Do not change.)	
n.X□□□	/COIN (Positioning Completion Output) Signal Output Timing	Reference
	0	Output when the absolute value of the position deviation is the same or less than the setting of Pn522 (Positioning Completed Width).	page 6-13
	1	Output when the absolute value of the position error is the same or less than the setting of Pn522 (Positioning Completed Width) and the reference after the position reference filter is 0.	
	2	Output when the absolute value of the position error is the same or less than the setting of Pn522 (Positioning Completed Width) and the reference input is 0.	

Pn20A	4	Number of External Encoder Scale Pitches	4 to 1,048,576	1 scale pitch/revolution	32768	Rotary	After restart	Setup	page 10-7
Pn20E	4	Electronic Gear Ratio (Numerator)	1 to 1,073,741,824	1	16	All	After restart	Setup	page 5-45
Pn210	4	Electronic Gear Ratio (Denominator)	1 to 1,073,741,824	1	1	All	After restart	Setup	page 5-45
Pn212	4	Number of Encoder Output Pulses	16 to 1,073,741,824	1 P/Rev	2048	Rotary	After restart	Setup	page 6-25

Continued on next page.

Continued from previous page.

Parameter No.	Size	Name	Setting Range	Setting Unit	Default Setting	Applicable Motors	When Enabled	Classification	Reference
Pn22A	2	Fully-closed Control Selections	0000h to 1003h	–	0000h	Rotary	After restart	Setup	page 10-9

n.□□□X	Reserved parameter (Do not change.)	
n.□□X□	Reserved parameter (Do not change.)	
n.□X□□	Reserved parameter (Do not change.)	
n.X□□□	Fully-closed Control Speed Feedback Selection	
	0	Use motor encoder speed.
	1	Use external encoder speed.

Pn230	2	Position Control Expansion Function Selections	0000h to 0001h	–	0000h	All	After restart	Setup	page 8-75

n.□□□X	Backlash Compensation Direction	
	0	Compensate forward references.
	1	Compensate reverse references.
n.□□X□	Reserved parameter (Do not change.)	
n.□X□□	Reserved parameter (Do not change.)	
n.X□□□	Reserved parameter (Do not change.)	

Pn231	4	Backlash Compensation	-500,000 to 500,000	0.1 reference units	0	All	Immediately	Setup	page 8-75
Pn233	2	Backlash Compensation Time Constant	0 to 65,535	0.01 ms	0	All	Immediately	Setup	page 8-76
Pn281	2	Encoder Output Resolution	1 to 4,096	1 edge/pitch	20	All	After restart	Setup	page 6-26
Pn282	4	Linear Encoder Scale Pitch	0 to 6,553,600	0.01 µm	0	Linear	After restart	Setup	page 5-18
Pn304	2	Jogging Speed	0 to 10,000	Rotary: 1 min^{-1} Direct Drive: 0.1 min^{-1}	500	Rotary	Immediately	Setup	page 7-7
Pn305	2	Soft Start Acceleration Time	0 to 10,000	1 ms	0	All	Immediately	Setup	*1
Pn306	2	Soft Start Deceleration Time	0 to 10,000	1 ms	0	All	Immediately	Setup	*1
Pn308	2	Speed Feedback Filter Time Constant	0 to 65,535	0.01 ms	0	All	Immediately	Setup	page 8-87
Pn30A	2	Deceleration Time for Servo OFF and Forced Stops	0 to 10,000	1 ms	0	All	Immediately	Setup	page 5-31
Pn30C	2	Speed Feedforward Average Movement Time	0 to 5,100	0.1 ms	0	All	Immediately	Setup	–

Continued on next page.

Continued from previous page.

Parameter No.	Size	Name	Setting Range	Setting Unit	Default Setting	Applicable Motors	When Enabled	Classi-fication	Refer-ence
Pn310	2	Vibration Detection Selections	0000h to 0002h	–	0000h	All	Immedi-ately	Setup	page 6-51
Pn311	2	Vibration Detection Sen-sitivity	50 to 500	1%	100	All	Immedi-ately	Tuning	page 6-51
Pn312	2	Vibration Detection Level	0 to 5,000	1 min^{-1}	50	Rotary	Immedi-ately	Tuning	page 6-51
Pn316	2	Maximum Motor Speed	0 to 65,535	1 min^{-1}	10000	Rotary	After restart	Setup	page 6-19
Pn324	2	Moment of Inertia Cal-culation Starting Level	0 to 20,000	1%	300	All	Immedi-ately	Setup	page 8-31
Pn383	2	Jogging Speed	0 to 10,000	1 mm/s	50	Linear	Immedi-ately	Setup	page 7-7
Pn384	2	Vibration Detection Level	0 to 5,000	1 mm/s	10	Linear	Immedi-ately	Tuning	page 6-51
Pn385	2	Maximum Motor Speed	1 to 100	100 mm/s	50	Linear	After restart	Setup	page 6-19
Pn401	2	First Stage First Torque Reference Filter Time Constant	0 to 65,535	0.01 ms	100	All	Immedi-ately	Tuning	page 8-84
Pn402	2	Forward Torque Limit	0 to 800	1%*2	800	Rotary	Immedi-ately	Setup	page 6-28
Pn403	2	Reverse Torque Limit	0 to 800	1%*2	800	Rotary	Immedi-ately	Setup	page 6-28
Pn404	2	Forward External Torque Limit	0 to 800	1%*2	100	All	Immedi-ately	Setup	page 6-29
Pn405	2	Reverse External Torque Limit	0 to 800	1%*2	100	All	Immedi-ately	Setup	page 6-29
Pn406	2	Emergency Stop Torque	0 to 800	1%*2	800	All	Immedi-ately	Setup	page 5-31
Pn407	2	Speed Limit during Torque Control	0 to 10,000	1 min^{-1}	10000	Rotary	Immedi-ately	Setup	page 6-15

	Vibration Detection Selection	
n.□□□X	0	Do not detect vibration.
	1	Output a warning (A.911) if vibration is detected.
	2	Output an alarm (A.520) if vibration is detected.
n.□□X□	Reserved parameter (Do not change.)	
n.□X□□	Reserved parameter (Do not change.)	
n.X□□□	Reserved parameter (Do not change.)	

Continued on next page.

Continued from previous page.

Parameter No.	Size	Name	Setting Range	Setting Unit	Default Setting	Applicable Motors	When Enabled	Classification	Reference
Pn408	2	Torque-Related Function Selections	0000h to 1111h	–	0000h	All	–	Setup	–

n.□□□X	Notch Filter Selection 1		When Enabled	Reference
	0	Disable first stage notch filter.	Immediately	page 8-84
	1	Enable first stage notch filter.		

n.□□X□	Speed Limit Selection		When Enabled	Reference
	0	Use the smaller of the maximum motor speed and the setting of Pn407 as the speed limit.	After restart	page 6-15
		Use the smaller of the maximum motor speed and the setting of Pn480 as the speed limit.		
	1	Use the smaller of the overspeed alarm detection speed and the setting of Pn407 as the speed limit.		
		Use the smaller of the overspeed alarm detection speed and the setting of Pn480 as the speed limit.		

n.□X□□	Notch Filter Selection 2		When Enabled	Reference
	0	Disable second stage notch filter.	Immediately	page 8-84
	1	Enable second stage notch filter.		

n.X□□□	Friction Compensation Function Selection		When Enabled	Reference
	0	Disable friction compensation.	Immediately	page 8-70
	1	Enable friction compensation.		

Pn409	2	First Stage Notch Filter Frequency	50 to 5,000	1 Hz	5000	All	Immediately	Tuning	page 8-84
Pn40A	2	First Stage Notch Filter Q Value	50 to 1,000	0.01	70	All	Immediately	Tuning	page 8-84
Pn40B	2	First Stage Notch Filter Depth	0 to 1,000	0.001	0	All	Immediately	Tuning	page 8-84
Pn40C	2	Second Stage Notch Filter Frequency	50 to 5,000	1 Hz	5000	All	Immediately	Tuning	page 8-84
Pn40D	2	Second Stage Notch Filter Q Value	50 to 1,000	0.01	70	All	Immediately	Tuning	page 8-84
Pn40E	2	Second Stage Notch Filter Depth	0 to 1,000	0.001	0	All	Immediately	Tuning	page 8-84
Pn40F	2	Second Stage Second Torque Reference Filter Frequency	100 to 5,000	1 Hz	5000	All	Immediately	Tuning	page 8-84
Pn410	2	Second Stage Second Torque Reference Filter Q Value	50 to 100	0.01	50	All	Immediately	Tuning	page 8-84
Pn412	2	First Stage Second Torque Reference Filter Time Constant	0 to 65,535	0.01 ms	100	All	Immediately	Tuning	page 8-66

Continued on next page.

Continued from previous page.

Parameter No.	Size	Name	Setting Range	Setting Unit	Default Setting	Applicable Motors	When Enabled	Classification	Reference
Pn416	2	Torque-Related Function Selections 2	0000h to 1111h	–	0000h	All	Immediately	Setup	page 8-86

n.□□□X	Notch Filter Selection 3	
	0	Disable third stage notch filter.
	1	Enable third stage notch filter.
n.□□X□	Notch Filter Selection 4	
	0	Disable fourth stage notch filter.
	1	Enable fourth stage notch filter.
n.□X□□	Notch Filter Selection 5	
	0	Disable fifth stage notch filter.
	1	Enable fifth stage notch filter.
n.X□□□	Reserved parameter (Do not change.)	

Pn417	2	Third Stage Notch Filter Frequency	50 to 5,000	1 Hz	5000	All	Immediately	Tuning	page 8-86
Pn418	2	Third Stage Notch Filter Q Value	50 to 1,000	0.01	70	All	Immediately	Tuning	page 8-86
Pn419	2	Third Stage Notch Filter Depth	0 to 1,000	0.001	0	All	Immediately	Tuning	page 8-86
Pn41A	2	Fourth Stage Notch Filter Frequency	50 to 5,000	1 Hz	5000	All	Immediately	Tuning	page 8-86
Pn41B	2	Fourth Stage Notch Filter Q Value	50 to 1,000	0.01	70	All	Immediately	Tuning	page 8-86
Pn41C	2	Fourth Stage Notch Filter Depth	0 to 1,000	0.001	0	All	Immediately	Tuning	page 8-86
Pn41D	2	Fifth Stage Notch Filter Frequency	50 to 5,000	1 Hz	5000	All	Immediately	Tuning	page 8-86
Pn41E	2	Fifth Stage Notch Filter Q Value	50 to 1,000	0.01	70	All	Immediately	Tuning	page 8-86
Pn41F	2	Fifth Stage Notch Filter Depth	0 to 1,000	0.001	0	All	Immediately	Tuning	page 8-86
Pn423	2	Speed Ripple Compensation Selections	0000h to 1111h	–	0000h	Rotary	–	Setup	page 8-64

			When Enabled
n.□□□X	Speed Ripple Compensation Function Selection		Immediately
	0	Disable speed ripple compensation.	
	1	Enable speed ripple compensation.	
n.□□X□	Speed Ripple Compensation Information Disagreement Warning Detection Selection		After restart
	0	Detect A.942 alarms.	
	1	Do not detect A.942 alarms.	
n.□X□□	Speed Ripple Compensation Enable Condition Selection		After restart
	0	Speed reference	
	1	Motor speed	
n.X□□□	Reserved parameter (Do not change.)		

Pn424	2	Torque Limit at Main Circuit Voltage Drop	0 to 100	1%*2	50	All	Immediately	Setup	page 6-18
Pn425	2	Release Time for Torque Limit at Main Circuit Voltage Drop	0 to 1,000	1 ms	100	All	Immediately	Setup	page 6-18

Continued on next page.

Continued from previous page.

Parameter No.	Size	Name	Setting Range	Setting Unit	Default Setting	Applicable Motors	When Enabled	Classification	Reference
Pn426	2	Torque Feedforward Average Movement Time	0 to 5,100	0.1 ms	0	All	Immediately	Setup	–
Pn427	2	Speed Ripple Compensation Enable Speed	0 to 10,000	1 min^{-1}	0	Rotary	Immediately	Tuning	page 8-64
Pn456	2	Sweep Torque Reference Amplitude	1 to 800	1%	15	All	Immediately	Tuning	page 8-100
Pn460	2	Notch Filter Adjustment Selections 1	0000h to 0101h	–	0101h	All	Immediately	Tuning	page 8-15, page 8-32

n.□□□X	Notch Filter Adjustment Selection 1	
	0	Do not adjust the first stage notch filter automatically during execution of autotuning without a host reference, autotuning with a host reference, and custom tuning.
	1	Adjust the first stage notch filter automatically during execution of autotuning without a host reference, autotuning with a host reference, and custom tuning.
n.□□X□	Reserved parameter (Do not change.)	
n.□X□□	Notch Filter Adjustment Selection 2	
	0	Do not adjust the second stage notch filter automatically when the tuning-less function is enabled or during execution of autotuning without a host reference, autotuning with a host reference, and custom tuning.
	1	Adjust the second stage notch filter automatically when the tuning-less function is enabled or during execution of autotuning without a host reference, autotuning with a host reference, and custom tuning.
n.X□□□	Reserved parameter (Do not change.)	

Pn475	2	Gravity Compensation-Related Selections	0000h to 0001h	–	0000h	All	After restart	Setup	page 8-72

n.□□□X	Gravity Compensation Selection	
	0	Disable gravity compensation.
	1	Enable gravity compensation.
n.□□X□	Reserved parameter (Do not change.)	
n.□X□□	Reserved parameter (Do not change.)	
n.X□□□	Reserved parameter (Do not change.)	

Pn476	2	Gravity Compensation Torque	-1,000 to 1,000	0.1%	0	All	Immediately	Tuning	page 8-72
Pn480	2	Speed Limit during Force Control	0 to 10,000	1 mm/s	10000	Linear	Immediately	Setup	page 6-15
Pn481	2	Polarity Detection Speed Loop Gain	10 to 20,000	0.1 Hz	400	Linear	Immediately	Tuning	–
Pn482	2	Polarity Detection Speed Loop Integral Time Constant	15 to 51,200	0.01 ms	3000	Linear	Immediately	Tuning	–
Pn483	2	Forward Force Limit	0 to 800	1%*2	30	Linear	Immediately	Setup	page 6-28
Pn484	2	Reverse Force Limit	0 to 800	1%*2	30	Linear	Immediately	Setup	page 6-28
Pn485	2	Polarity Detection Reference Speed	0 to 100	1 mm/s	20	Linear	Immediately	Tuning	–
Pn486	2	Polarity Detection Reference Acceleration/Deceleration Time	0 to 100	1 ms	25	Linear	Immediately	Tuning	–
Pn487	2	Polarity Detection Constant Speed Time	0 to 300	1 ms	0	Linear	Immediately	Tuning	–

Continued on next page.

Continued from previous page.

Parameter No.	Size	Name	Setting Range	Setting Unit	Default Setting	Applicable Motors	When Enabled	Classi-fication	Refer-ence
Pn488	2	Polarity Detection Reference Waiting Time	50 to 500	1 ms	100	Linear	Immedi-ately	Tuning	–
Pn48E	2	Polarity Detection Range	1 to 65,535	1 mm	10	Linear	Immedi-ately	Tuning	–
Pn490	2	Polarity Detection Load Level	0 to 20,000	1%	100	Linear	Immedi-ately	Tuning	–
Pn495	2	Polarity Detection Confirmation Force Reference	0 to 200	1%	100	Linear	Immedi-ately	Tuning	–
Pn498	2	Polarity Detection Allowable Error Range	0 to 30	1 deg	10	Linear	Immedi-ately	Tuning	–
Pn49F	2	Speed Ripple Compensation Enable Speed	0 to 10,000	1 mm/s	0	Linear	Immedi-ately	Tuning	page 8-64
Pn502	2	Rotation Detection Level	1 to 10,000	1 min^{-1}	20	Rotary	Immedi-ately	Setup	page 6-9
Pn503	2	Speed Coincidence Detection Signal Output Width	0 to 100	1 min^{-1}	10	Rotary	Immedi-ately	Setup	page 6-11
Pn506	2	Brake Reference-Servo OFF Delay Time	0 to 50	10 ms	0	All	Immedi-ately	Setup	page 5-34
Pn507	2	Brake Reference Output Speed Level	0 to 10,000	1 min^{-1}	100	Rotary	Immedi-ately	Setup	page 5-34
Pn508	2	Servo OFF-Brake Command Waiting Time	10 to 100	10 ms	50	All	Immedi-ately	Setup	page 5-34
Pn509	2	Momentary Power Interruption Hold Time	20 to 50,000	1 ms	20	All	Immedi-ately	Setup	page 6-16
Pn50A	2	Input Signal Selections 1	0000h to FFF2h	–	1881h	All	After restart	Setup	–

n.□□□X	Reserved parameter (Do not change.)
n.□□X□	Reserved parameter (Do not change.)
n.□X□□	Reserved parameter (Do not change.)

		P-OT (Forward Drive Prohibit) Signal Allocation	Reference
n.X□□□	0	Enable forward drive when CN1-13 input signal is ON (closed).	page 5-30
	1	Enable forward drive when CN1-7 input signal is ON (closed).	
	2	Enable forward drive when CN1-8 input signal is ON (closed).	
	3	Enable forward drive when CN1-9 input signal is ON (closed).	
	4	Enable forward drive when CN1-10 input signal is ON (closed).	
	5	Enable forward drive when CN1-11 input signal is ON (closed).	
	6	Enable forward drive when CN1-12 input signal is ON (closed).	
	7	Set the signal to always prohibit forward drive.	
	8	Set the signal to always enable forward drive.	
	9	Enable forward drive when CN1-13 input signal is OFF (open).	
	A	Enable forward drive when CN1-7 input signal is OFF (open).	
	B	Enable forward drive when CN1-8 input signal is OFF (open).	
	C	Enable forward drive when CN1-9 input signal is OFF (open).	
	D	Enable forward drive when CN1-10 input signal is OFF (open).	
	E	Enable forward drive when CN1-11 input signal is OFF (open).	
	F	Enable forward drive when CN1-12 input signal is OFF (open).	

Continued on next page.

Continued from previous page.

Parameter No.	Size	Name	Setting Range	Setting Unit	Default Setting	Applicable Motors	When Enabled	Classi-fication	Refer-ence
Pn50B	2	Input Signal Selections 2	0000h to FFFFh	–	8882h	All	After restart	Setup	–

	N-OT (Reverse Drive Prohibit) Signal Allocation		Reference
n.□□□X	0	Enable reverse drive when CN1-13 input signal is ON (closed).	page 5-30
	1	Enable reverse drive when CN1-7 input signal is ON (closed).	
	2	Enable reverse drive when CN1-8 input signal is ON (closed).	
	3	Enable reverse drive when CN1-9 input signal is ON (closed).	
	4	Enable reverse drive when CN1-10 input signal is ON (closed).	
	5	Enable reverse drive when CN1-11 input signal is ON (closed).	
	6	Enable reverse drive when CN1-12 input signal is ON (closed).	
	7	Set the signal to always prohibit reverse drive.	
	8	Set the signal to always enable reverse drive.	
	9	Enable reverse drive when CN1-13 input signal is OFF (open).	
	A	Enable reverse drive when CN1-7 input signal is OFF (open).	
	B	Enable reverse drive when CN1-8 input signal is OFF (open).	
	C	Enable reverse drive when CN1-9 input signal is OFF (open).	
	D	Enable reverse drive when CN1-10 input signal is OFF (open).	
	E	Enable reverse drive when CN1-11 input signal is OFF (open).	
	F	Enable reverse drive when CN1-12 input signal is OFF (open).	

n.□□X□	Reserved parameter (Do not change.)

	/P-CL (Forward External Torque Limit Input) Signal Allocation		Reference
n.□X□□	0	Active when CN1-13 input signal is ON (closed).	page 6-29
	1	Active when CN1-7 input signal is ON (closed).	
	2	Active when CN1-8 input signal is ON (closed).	
	3	Active when CN1-9 input signal is ON (closed).	
	4	Active when CN1-10 input signal is ON (closed).	
	5	Active when CN1-11 input signal is ON (closed).	
	6	Active when CN1-12 input signal is ON (closed).	
	7	The signal is always active.	
	8	The signal is always inactive.	
	9	Active when CN1-13 input signal is OFF (open).	
	A	Active when CN1-7 input signal is OFF (open).	
	B	Active when CN1-8 input signal is OFF (open).	
	C	Active when CN1-9 input signal is OFF (open).	
	D	Active when CN1-10 input signal is OFF (open).	
	E	Active when CN1-11 input signal is OFF (open).	
	F	Active when CN1-12 input signal is OFF (open).	

	/N-CL (Reverse External Torque Limit Input) Signal Allocation		Reference
n.X□□□	0 to F	The allocations are the same as the /P-CL (Forward External Torque Limit Input) signal allocations.	page 6-29

Continued on next page.

Continued from previous page.

Parameter No.	Size	Name	Setting Range	Setting Unit	Default Setting	Applicable Motors	When Enabled	Classification	Reference
Pn50E	2	Output Signal Selections 1	0000h to 6666h	–	0000h	All	After restart	Setup	–

	/COIN (Positioning Completion Output) Signal Allocation		Reference
n.□□□X	0	Disabled (the above signal output is not used).	page 6-12
	1	Output the signal from the CN1-1 or CN1-2 output terminal.	
	2	Output the signal from the CN1-23 or CN1-24 output terminal.	
	3	Output the signal from the CN1-25 or CN1-26 output terminal.	
	4 to 6	Reserved setting (Do not use.)	

	/V-CMP (Speed Coincidence Detection Output) Signal Allocation		Reference
n.□□X□	0 to 6	The allocations are the same as the /COIN (Positioning Completion) signal allocations.	page 6-11

	/TGON (Rotation Detection Output) Signal Allocation		Reference
n.□X□□	0 to 6	The allocations are the same as the /COIN (Positioning Completion) signal allocations.	page 6-9

	/S-RDY (Servo Ready) Signal Allocation		Reference
n.X□□□	0 to 6	The allocations are the same as the /COIN (Positioning Completion) signal allocations.	page 6-10

Pn50F	2	Output Signal Selections 2	0000h to 6666h	–	0100h	All	After restart	Setup	–

	/CLT (Torque Limit Detection Output) Signal Allocation		Reference
n.□□□X	0	Disabled (the above signal output is not used).	page 6-32
	1	Output the signal from the CN1-1 or CN1-2 output terminal.	
	2	Output the signal from the CN1-23 or CN1-24 output terminal.	
	3	Output the signal from the CN1-25 or CN1-26 output terminal.	
	4 to 6	Reserved setting (Do not use.)	

	/VLT (Speed Limit Detection) Signal Allocation		Reference
n.□□X□	0 to 6	The allocations are the same as the /CLT (Torque Limit Detection Output) signal allocations.	page 6-14

	/BK (Brake Output) Signal Allocation		Reference
n.□X□□	0 to 6	The allocations are the same as the /CLT (Torque Limit Detection Output) signal allocations.	page 5-35

	/WARN (Warning Output) Signal Allocation		Reference
n.X□□□	0 to 6	The allocations are the same as the /CLT (Torque Limit Detection Output) signal allocations.	page 6-8

Continued on next page.

Continued from previous page.

Parameter No.	Size	Name	Setting Range	Setting Unit	Default Setting	Applicable Motors	When Enabled	Classi-fication	Refer-ence
Pn510	2	Output Signal Selec-tions 3	0000h to 0666h	–	0000h	All	After restart	Setup	–

n.□□□X	/NEAR (Near Output) Signal Allocation		Reference
	0	Disabled (the above signal output is not used).	page 6-13
	1	Output the signal from the CN1-1 or CN1-2 output terminal.	
	2	Output the signal from the CN1-23 or CN1-24 output terminal.	
	3	Output the signal from the CN1-25 or CN1-26 output terminal.	
	4 to 6	Reserved setting (Do not use.)	
n.□□X□	Reserved parameter (Do not change.)		
n.□X□□	Reserved parameter (Do not change.)		
n.X□□□	Reserved parameter (Do not change.)		

Pn511	2	Input Signal Selections 5	0000h to FFFFh	–	6543h	All	After restart	Setup	page 6-4

n.□□□X	/DEC (Origin Return Deceleration Switch Input) Signal Allocation	
	0	Active when CN1-13 input signal is ON (closed).
	1	Active when CN1-7 input signal is ON (closed).
	2	Active when CN1-8 input signal is ON (closed).
	3	Active when CN1-9 input signal is ON (closed).
	4	Active when CN1-10 input signal is ON (closed).
	5	Active when CN1-11 input signal is ON (closed).
	6	Active when CN1-12 input signal is ON (closed).
	7	The signal is always active.
	8	The signal is always inactive.
	9	Active when CN1-13 input signal is OFF (open).
	A	Active when CN1-7 input signal is OFF (open).
	B	Active when CN1-8 input signal is OFF (open).
	C	Active when CN1-9 input signal is OFF (open).
	D	Active when CN1-10 input signal is OFF (open).
	E	Active when CN1-11 input signal is OFF (open).
	F	Active when CN1-12 input signal is OFF (open).

n.□□X□	/EXT1 (External Latch Input 1) Signal Allocation	
	0 to 3	The signal is always inactive.
	4	Active when CN1-10 input signal is ON (closed).
	5	Active when CN1-11 input signal is ON (closed).
	6	Active when CN1-12 input signal is ON (closed).
	D	Active when CN1-10 input signal is OFF (open).
	E	Active when CN1-11 input signal is OFF (open).
	F	Active when CN1-12 input signal is OFF (open).
	7 to C	The signal is always inactive.
n.□X□□	/EXT2 (External Latch Input 2) Signal Allocation	
	0 to F	The allocations are the same as the /EXT1 (External Latch Input 1) signal allo-cations.
n.X□□□	/EXT3 (External Latch Input 3) Signal Allocation	
	0 to F	The allocations are the same as the /EXT1 (External Latch Input 1) signal allo-cations.

Continued on next page.

Continued from previous page.

Parameter No.	Size	Name	Setting Range	Setting Unit	Default Setting	Applicable Motors	When Enabled	Classi-fication	Refer-ence
Pn512	2	Output Signal Inverse Settings	0000h to 1111h	–	0000h	All	After restart	Setup	page 6-5

n.□□□X	Output Signal Inversion for CN1-1 and CN1-2 Terminals	
	0	The signal is not inverted.
	1	The signal is inverted.
n.□□X□	Output Signal Inversion for CN1-23 and CN1-24 Terminals	
	0	The signal is not inverted.
	1	The signal is inverted.
n.□X□□	Output Signal Inversion for CN1-25 and CN1-26 Terminals	
	0	The signal is not inverted.
	1	The signal is inverted.
n.X□□□	Reserved parameter (Do not change.)	

Pn514	2	Output Signal Selec-tions 4	0000h to 0666h	–	0000h	All	After restart	Setup	–

n.□□□X	Reserved parameter (Do not change.)	
n.□□X□	Reserved parameter (Do not change.)	
n.□X□□	/PM (Preventative Maintenance Output) Signal Allocation	Reference
	0	Disabled (the above signal output is not used).
	1	Output the signal from the CN1-1 or CN1-2 output terminal.
	2	Output the signal from the CN1-23 or CN1-24 output terminal.
	3	Output the signal from the CN1-25 or CN1-26 output terminal.
	4 to 6	Reserved setting (Do not use.)
		page 9-17
n.X□□□	Reserved parameter (Do not change.)	

Continued on next page.

Continued from previous page.

Parameter No.	Size	Name	Setting Range	Setting Unit	Default Setting	Applicable Motors	When Enabled	Classi-fication	Refer-ence
Pn516	2	Input Signal Selections 7	0000h to FFFFh	–	8888h	All	After restart	Setup	–

	FSTP (Forced Stop Input) Signal Allocation		Reference
n.□□□X	0	Enable drive when CN1-13 input signal is ON (closed).	page 6-59
	1	Enable drive when CN1-7 input signal is ON (closed).	
	2	Enable drive when CN1-8 input signal is ON (closed).	
	3	Enable drive when CN1-9 input signal is ON (closed).	
	4	Enable drive when CN1-10 input signal is ON (closed).	
	5	Enable drive when CN1-11 input signal is ON (closed).	
	6	Enable drive when CN1-12 input signal is ON (closed).	
	7	Set the signal to always prohibit drive (always force the motor to stop).	
	8	Set the signal to always enable drive (always disable forcing the motor to stop).	
	9	Enable drive when CN1-13 input signal is OFF (open).	
	A	Enable drive when CN1-7 input signal is OFF (open).	
	B	Enable drive when CN1-8 input signal is OFF (open).	
	C	Enable drive when CN1-9 input signal is OFF (open).	
	D	Enable drive when CN1-10 input signal is OFF (open).	
	E	Enable drive when CN1-11 input signal is OFF (open).	
	F	Enable drive when CN1-12 input signal is OFF (open).	
n.□□X□	Reserved parameter (Do not change.)		
n.□X□□	Reserved parameter (Do not change.)		
n.X□□□	Reserved parameter (Do not change.)		

Pn518*3	–	Safety Module-Related Parameters	–	–	–	All	–	–	–
Pn51B	4	Motor-Load Position Deviation Overflow Detection Level	0 to 1,073,741,824	1 reference unit	1000	Rotary	Immediately	Setup	page 10-8
Pn51E	2	Position Deviation Overflow Warning Level	10 to 100	1%	100	All	Immediately	Setup	page 8-9
Pn520	4	Position Deviation Overflow Alarm Level	1 to 1,073,741,823	1 reference unit	5242880	All	Immediately	Setup	page 8-8, page 8-90
Pn522	4	Positioning Completed Width	0 to 1,073,741,824	1 reference unit	7	All	Immediately	Setup	page 6-12
Pn524	4	Near Signal Width	1 to 1,073,741,824	1 reference unit	1073741824	All	Immediately	Setup	page 6-13
Pn526	4	Position Deviation Overflow Alarm Level at Servo ON	1 to 1,073,741,823	1 reference unit	5242880	All	Immediately	Setup	page 8-10
Pn528	2	Position Deviation Overflow Warning Level at Servo ON	10 to 100	1%	100	All	Immediately	Setup	page 8-10
Pn529	2	Speed Limit Level at Servo ON	0 to 10,000	1 min^{-1}	10000	Rotary	Immediately	Setup	page 8-10
Pn52A	2	Multiplier per Fully-closed Rotation	0 to 100	1%	20	Rotary	Immediately	Tuning	page 10-8
Pn52B	2	Overload Warning Level	1 to 100	1%	20	All	Immediately	Setup	page 5-42
Pn52C	2	Base Current Derating at Motor Overload Detection	10 to 100	1%	100	All	After restart	Setup	page 5-43

Continued on next page.

Continued from previous page.

Parameter No.	Size	Name	Setting Range	Setting Unit	Default Setting	Applicable Motors	When Enabled	Classification	Reference
Pn530	2	Program Jogging-Related Selections	0000h to 0005h	–	0000h	All	Immediately	Setup	page 7-14

n.□□□X	Program Jogging Operation Pattern	
	0	(Waiting time in Pn535 → Forward by travel distance in Pn531) × Number of movements in Pn536
	1	(Waiting time in Pn535 → Reverse by travel distance in Pn531) × Number of movements in Pn536
	2	(Waiting time in Pn535 → Forward by travel distance in Pn531) × Number of movements in Pn536 (Waiting time in Pn535 → Reverse by travel distance in Pn531) × Number of movements in Pn536
	3	(Waiting time in Pn535 → Reverse by travel distance in Pn531) × Number of movements in Pn536 (Waiting time in Pn535 → Forward by travel distance in Pn531) × Number of movements in Pn536
	4	(Waiting time in Pn535 → Forward by travel distance in Pn531 → Waiting time in Pn535 → Reverse by travel distance in Pn531) × Number of movements in Pn536
	5	(Waiting time in Pn535 → Reverse by travel distance in Pn531 → Waiting time in Pn535 → Forward by travel distance in Pn531) × Number of movements in Pn536
n.□□X□	Reserved parameter (Do not change.)	
n.□X□□	Reserved parameter (Do not change.)	
n.X□□□	Reserved parameter (Do not change.)	

Parameter No.	Size	Name	Setting Range	Setting Unit	Default Setting	Applicable Motors	When Enabled	Classification	Reference
Pn531	4	Program Jogging Travel Distance	1 to 1,073,741,824	1 reference unit	32768	All	Immediately	Setup	page 7-14
Pn533	2	Program Jogging Movement Speed	1 to 10,000	Rotary: 1 min^{-1} Direct Drive: 0.1 min^{-1}	500	Rotary	Immediately	Setup	page 7-14
Pn534	2	Program Jogging Acceleration/Deceleration Time	2 to 10,000	1 ms	100	All	Immediately	Setup	page 7-14
Pn535	2	Program Jogging Waiting Time	0 to 10,000	1 ms	100	All	Immediately	Setup	page 7-14
Pn536	2	Program Jogging Number of Movements	0 to 1,000	Times	1	All	Immediately	Setup	page 7-14
Pn550	2	Analog Monitor 1 Offset Voltage	-10,000 to 10,000	0.1 V	0	All	Immediately	Setup	page 9-11
Pn551	2	Analog Monitor 2 Offset Voltage	-10,000 to 10,000	0.1 V	0	All	Immediately	Setup	page 9-11
Pn552	2	Analog Monitor 1 Magnification	-10,000 to 10,000	× 0.01	100	All	Immediately	Setup	page 9-11
Pn553	2	Analog Monitor 2 Magnification	-10,000 to 10,000	× 0.01	100	All	Immediately	Setup	page 9-11
Pn55A	2	Power Consumption Monitor Unit Time	1 to 1,440	1 min	1	All	Immediately	Setup	–
Pn560	2	Residual Vibration Detection Width	1 to 3,000	0.1%	400	All	Immediately	Setup	page 8-56
Pn561	2	Overshoot Detection Level	0 to 100	1%	100	All	Immediately	Setup	page 8-31, page 8-41

Continued on next page.

Continued from previous page.

Parameter No.	Size	Name	Setting Range	Setting Unit	Default Setting	Applicable Motors	When Enabled	Classi-fication	Refer-ence
Pn56A	2	Output Signal Reference Method Selections 1	0000h to 1111h	–	0000h	All	After restart	Setup	page 6-7

n.□□□X	SO1 Output Signal Reference Method Selection	
	0	Output parameter-assigned SO1 signal.
	1	Output OR of parameter-assigned SO1 signal and signal set by SVCMD_IO.
n.□□X□	SO2 Output Signal Reference Method Selection	
	0	Output parameter-assigned SO2 signal.
	1	Output OR of parameter-assigned SO2 signal and signal set by SVCMD_IO.
n.□X□□	SO3 Output Signal Reference Method Selection	
	0	Output parameter-assigned SO3 signal.
	1	Output OR of parameter-assigned SO3 signal and signal set by SVCMD_IO.
n.X□□□	Reserved parameter (Do not change.)	

Pn56B	2	Reserved parameters (Do not change.)	–	–	0000h	All	–	–	–
Pn581	2	Zero Speed Level	1 to 10,000	1 mm/s	20	Linear	Immedi-ately	Setup	page 6-9
Pn582	2	Speed Coincidence Detection Signal Output Width	0 to 100	1 mm/s	10	Linear	Immedi-ately	Setup	page 6-11
Pn583	2	Brake Reference Out-put Speed Level	0 to 10,000	1 mm/s	10	Linear	Immedi-ately	Setup	page 5-34
Pn584	2	Speed Limit Level at Servo ON	0 to 10,000	1 mm/s	10000	Linear	Immedi-ately	Setup	page 8-10
Pn585	2	Program Jogging Move-ment Speed	1 to 10,000	1 mm/s	50	Linear	Immedi-ately	Setup	page 7-14
Pn586	2	Motor Running Cooling Ratio	0 to 100	1%/ Max. speed	0	Linear	Immedi-ately	Setup	–
Pn587	2	Polarity Detection Execution Selection for Absolute Linear Encoder	0000h to 0001h	–	0000h	Linear	Immedi-ately	Setup	–

n.□□□X	Polarity Detection Selection for Absolute Linear Encoder		Reference
	0	Do not detect polarity.	page 5-26
	1	Detect polarity.	
n.□□X□	Reserved parameter (Do not change.)		
n.□X□□	Reserved parameter (Do not change.)		
n.X□□□	Reserved parameter (Do not change.)		

Pn600	2	Regenerative Resistor Capacity*4	Depends on model.*5	10 W	0	All	Immedi-ately	Setup	page 5-56
Pn601	2	Dynamic Brake Resis-tor Allowable Energy Consumption	0 to 65,535	10 J	0	All	After restart	Setup	*6
Pn603	2	Regenerative Resis-tance	0 to 65,535	10 mΩ	0	All	Immedi-ately	Setup	page 5-56
Pn604	2	Dynamic Brake Resis-tance	0 to 65,535	10 mΩ	0	All	After restart	Setup	*6

Continued on next page.

Continued from previous page.

Parameter No.	Size	Name	Setting Range	Setting Unit	Default Setting	Applicable Motors	When Enabled	Classi-fication	Refer-ence
Pn61A	2	Overheat Protection Selections	0000h to 0003h	–	0000h	All	After restart	Setup	page 6-62

n.□□□X	Overheat Protection Selection	
	0	Disable overheat protection.
	1	Use overheat protection in the Yaskawa Linear Servomotor.*7
	2	Monitor a negative voltage input from a sensor attached to the machine and use overheat protection.
	3	Monitor a positive voltage input from a sensor attached to the machine and use overheat protection.
n.□□X□	Reserved parameter (Do not change.)	
n.□X□□	Reserved parameter (Do not change.)	
n.X□□□	Reserved parameter (Do not change.)	

Pn61B *8	2	Overheat Alarm Level	0 to 500	0.01 V	250	All	Immedi-ately	Setup	page 6-63
Pn61C *8	2	Overheat Warning Level	0 to 100	1%	100	All	Immedi-ately	Setup	page 6-63
Pn61D *8	2	Overheat Alarm Filter Time	0 to 65,535	1 s	0	All	Immedi-ately	Setup	page 6-63
Pn621 to Pn628*3	–	Safety Module-Related Parameters	–	–	–	All	–	–	–

Continued on next page.

Continued from previous page.

Parameter No.	Size	Name	Setting Range	Setting Unit	Default Setting	Applicable Motors	When Enabled	Classi-fication	Refer-ence
Pn800	2	Communications Con-trols	0000h to 1FF3h	–	1040h	All	Immedi-ately	Setup	–

n.□□□X	MECHATROLINK Communications Check Mask for Debugging	
	0	Do not mask.
	1	Ignore MECHATROLINK communications errors (A.E60).
	2	Ignore WDT errors (A.E50).
	3	Ignore both MECHATROLINK communications errors (A.E60) and WDT errors (A.E50).

n.□□X□	Warning Check Masks	
	0	Do not mask.
	1	Ignore data setting warnings (A.94□).
	2	Ignore command warnings (A.95□).
	3	Ignore both A.94□ and A.95□ warnings.
	4	Ignore communications warnings (A.96□).
	5	Ignore both A.94□ and A.96□ warnings.
	6	Ignore both A.95□ and A.96□ warnings.
	7	Ignore A.94□, A.95□, and A.96□ warnings.
	8	Ignore data setting warnings (A.97A and A.97b).
	9	Ignore A.94□, A.97A, and A.97b warnings.
	A	Ignore A.95□, A.97A, and A.97b warnings.
	B	Ignore A.94□, A.95□, A.97A, and A.97b warnings.
	C	Ignore A.96□, A.97A, and A.97b warnings.
	D	Ignore A.94□, A.96□, A.97A, and A.97b warnings.
	E	Ignore A.95□, A.96□, A.97A, and A.97b warnings.
	F	Ignore A.94□, A.95□, A.96□, A.97A, and A.97b warnings.

n.□X□□	Reserved parameter (Do not change.)

n.X□□□ M3 *9	Automatic Warning Clear Selection for Debugging*9	
	0	Retain warnings for debugging.
	1	Automatically clear warnings (MECHATROLINK-III specification).

Parameter No.	Size	Name	Setting Range	Setting Unit	Default Setting	Applicable Motors	When Enabled	Classi-fication	Refer-ence
Pn801	2	Application Function Selections 6 (Software Limits)	0000h to 0103h	–	0003h	All	Immedi-ately	Setup	page 6-27

n.□□□X	Software Limit Selection	
	0	Enable both forward and reverse software limits.
	1	Disable forward software limit.
	2	Disable reverse software limit.
	3	Disable both forward and reverse software limits.

n.□□X□	Reserved parameter (Do not change.)

n.□X□□	Software Limit Check for References	
	0	Do not perform software limit checks for references.
	1	Perform software limit checks for references.

n.X□□□	Reserved parameter (Do not change.)

Parameter No.	Size	Name	Setting Range	Setting Unit	Default Setting	Applicable Motors	When Enabled	Classi-fication	Refer-ence
Pn803	2	Origin Range	0 to 250	1 refer-ence unit	10	All	Immedi-ately	Setup	*1
Pn804	4	Forward Software Limit	-1,073,741,823 to 1,073,741,823	1 refer-ence unit	107374 1823	All	Immedi-ately	Setup	page 6-27

Continued on next page.

Continued from previous page.

Parameter No.	Size	Name	Setting Range	Setting Unit	Default Setting	Applicable Motors	When Enabled	Classification	Reference
Pn806	4	Reverse Software Limit	-1,073,741,823 to 1,073,741,823	1 reference unit	-10737 41823	All	Immediately	Setup	page 6-27
Pn808	4	Absolute Encoder Origin Offset	-1,073,741,823 to 1,073,741,823	1 reference unit	0	All	Immediately *10	Setup	page 5-53
Pn80A	2	First Stage Linear Acceleration Constant	1 to 65,535	10,000 reference units/s^2	100	All	Immediately *11	Setup	*1
Pn80B	2	Second Stage Linear Acceleration Constant	1 to 65,535	10,000 reference units/s^2	100	All	Immediately *11	Setup	*1
Pn80C	2	Acceleration Constant Switching Speed	0 to 65,535	100 reference units/s	0	All	Immediately *11	Setup	*1
Pn80D	2	First Stage Linear Deceleration Constant	1 to 65,535	10,000 reference units/s^2	100	All	Immediately *11	Setup	*1
Pn80E	2	Second Stage Linear Deceleration Constant	1 to 65,535	10,000 reference units/s^2	100	All	Immediately *11	Setup	*1
Pn80F	2	Deceleration Constant Switching Speed	0 to 65,535	100 reference units/s	0	All	Immediately *11	Setup	*1
Pn810	2	Exponential Acceleration/Deceleration Bias	0 to 65,535	100 reference units/s	0	All	Immediately *12	Setup	*1
Pn811	2	Exponential Acceleration/Deceleration Time Constant	0 to 5,100	0.1 ms	0	All	Immediately *12	Setup	*1
Pn812	2	Movement Average Time	0 to 5,100	0.1 ms	0	All	Immediately *12	Setup	*1
Pn814	4	External Positioning Final Travel Distance	-1,073,741,823 to 1,073,741,823	1 reference unit	100	All	Immediately	Setup	*1
Pn816 M2 *14	2	Origin Return Mode Settings	0000h to 0001h	–	0000h	All	Immediately	Setup	*13
Pn817 *15	2	Origin Approach Speed 1	0 to 65,535	100 reference units/s	50	All	Immediately *11	Setup	*1
Pn818 *16	2	Origin Approach Speed 2	0 to 65,535	100 reference units/s	5	All	Immediately *11	Setup	*1
Pn819	4	Final Travel Distance for Origin Return	-1,073,741,823 to 1,073,741,823	1 reference unit	100	All	Immediately	Setup	*1

	Origin Return Direction	
n.□□□X	0	Return in forward direction.
	1	Return in reverse direction.
n.□□X□	Reserved parameter (Do not change.)	
n.□X□□	Reserved parameter (Do not change.)	
n.X□□□	Reserved parameter (Do not change.)	

Continued on next page.

Continued from previous page.

Parameter No.	Size	Name	Setting Range	Setting Unit	Default Setting	Applicable Motors	When Enabled	Classi-fication	Refer-ence
Pn81E M2 *14	2	Input Signal Monitor Selections	0000h to 7777h	–	0000h	All	Immedi-ately	Setup	*13

n.□□□X	IO12 Signal Mapping	
	0	Do not map.
	1	Monitor CN1-13 input terminal.
	2	Monitor CN1-7 input terminal.
	3	Monitor CN1-8 input terminal.
	4	Monitor CN1-9 input terminal.
	5	Monitor CN1-10 input terminal.
	6	Monitor CN1-11 input terminal.
	7	Monitor CN1-12 input terminal.
n.□□X□	IO13 Signal Mapping	
	0 to 7	The mappings are the same as the IO12 signal mappings.
n.□X□□	IO14 Signal Mapping	
	0 to 7	The mappings are the same as the IO12 signal mappings.
n.X□□□	IO15 Signal Mapping	
	0 to 7	The mappings are the same as the IO12 signal mappings.

Pn81F M2 *14	2	Command Data Allocations	0000h to 1111h	–	0010h	All	After restart	Setup	*13

n.□□□X	Option Field Allocation	
	0	Disable option field allocation.
	1	Enable option field allocation.
n.□□X□	Position Control Command TFF/TLIM Allocation	
	0	Disable allocation.
	1	Enable allocation.
n.□X□□	Reserved parameter (Do not change.)	
n.X□□□	Reserved parameter (Do not change.)	

Pn820	4	Forward Latching Area	-2,147,483,648 to 2,147,483,647	1 reference unit	0	All	Immedi-ately	Setup	*1
Pn822	4	Reverse Latching Area	-2,147,483,648 to 2,147,483,647	1 reference unit	0	All	Immedi-ately	Setup	*1

Continued on next page.

Continued from previous page.

Parameter No.	Size	Name	Setting Range	Setting Unit	Default Setting	Applicable Motors	When Enabled	Classification	Reference
Pn824 M3 *9	2	Option Monitor 1 Selection	0000h to FFFFh	–	0000h	–	Immediately	Setup	*1

Setting	Monitor	Applicable Motors
High-Speed Monitor Region		
0000h	Motor speed [1000000h/overspeed detection speed]	All
0001h	Speed reference [1000000h/overspeed detection speed]	All
0002h	Torque [1000000h/maximum torque]	All
0003h	Position deviation (lower 32 bits) [reference units]	All
0004h	Position deviation (upper 32 bits) [reference units]	All
000Ah	Encoder count (lower 32 bits) [reference units]	All
000Bh	Encoder count (upper 32 bits) [reference units]	All
000Ch	FPG count (lower 32 bits) [reference units]	All
000Dh	FPG count (upper 32 bits) [reference units]	All
0055h*17	Estimated vibration [1000000/overspeed detection speed]	All
0056h*17	Estimated external disturbance torque [1000000h/maximum torque]	All
Low-Speed Monitor Region		
0010h	Un000: Motor speed [min^{-1}]	All
0011h	Un001: Speed Reference [min^{-1}]	All
0012h	Un002: Torque Reference [%]	All
0013h	Un003: Rotational Angle 1 [encoder pulses] Number of encoder pulses from origin within one encoder rotation displayed in decimal	All
	Un003: Rotational Angle 1 [linear encoder pulses] Linear encoder pulses from the polarity origin displayed in decimal	
0014h	Un004: Rotational Angle 2 [deg] Electrical angle from polarity origin	All
	Un004: Electrical Angle 2 [deg] Electrical angle from polarity origin	
0015h	Un005: Input Signal Monitor	All
0016h	Un006: Output Signal Monitor	All
0017h	Un007: Input Reference Speed [min^{-1}]	All
0018h	Un008: Position Deviation [reference units]	All
0019h	Un009: Accumulated Load Ratio [%]	All
001Ah	Un00A: Regenerative Load Ratio [%]	All
001Bh	Un00B: Dynamic Brake Resistor Power Consumption [%]	All
001Ch	Un00C: Input Reference Pulse Counter [reference units]	All
001Dh	Un00D: Feedback Pulse Counter [encoder pulses]	All
001Eh	Un00E: Fully-closed Loop Feedback Pulse Counter [external encoder resolution]	Rotary
0023h	Initial multiturn data [Rev]	Rotary
0024h	Initial incremental data [pulses]	Rotary
0025h	Initial absolute position data (lower 32 bits) [pulses]	Linear
0026h	Initial absolute position data (upper 32 bits) [pulses]	Linear
0040h	Un025: SERVOPACK Installation Environment Monitor	All
0041h	Un026: Servomotor Installation Environment Monitor	All
0042h	Un027: Built-in Fan Remaining Life Ratio	All
0043h	Un028: Capacitor Remaining Life Ratio	All
0044h	Un029: Surge Prevention Circuit Remaining Life Ratio	All
0045h	Un02A: Dynamic Brake Circuit Remaining Life Ratio	All
0046h	Un032: Instantaneous Power	All
0047h	Un033: Power Consumption	All
0048h	Un034: Cumulative Power Consumption	All

Continued on next page.

Continued from previous page.

Parameter No.	Size	Name	Setting Range	Setting Unit	Default Setting	Applicable Motors	When Enabled	Classi-fication	Refer-ence
Pn824 M3 *9									

Setting	Monitor	Applicable Motors
Low-Speed Monitor Region		
0070h*17	Un078: Maximum value of amplitude of estimated vibration [min^{-1}]	All
0071h*17	Un07A: Maximum value of estimated external disturbance Torque [%]	All
0072h*17	Un07B: Minimum value of estimated external disturbance Torque [%]	All
0073h*17	Un147: Number of MECHATROLINK communications errors [times]	All
0074h*17	Un104: Number of serial encoder communications errors [times]	All
0075h*17	Un105: Settling time [0.1 ms]	All
0076h*17	Un106: Amount of overshoot [reference units]	All
0077h*17	Un107: Residual vibration frequency [0.1 Hz]	All
0079h*17	Un174: Temperature margin until Servomotor overheats [°C]	All
007Ah*17	Un145: Maximum value of accumulated load ratio [%]	All
007Bh*17	Un14E: Margin until overload [0.01%]	All
Low-Speed Monitor Region (Communications module only)		
0080h	Previous value of latched feedback position (LPOS1) [reference units]	All
0081h	Previous value of latched feedback position (LPOS2) [reference units]	All
0084h	Continuous Latch Status (EX STATUS)	All
All Areas		
Other values	Reserved settings (Do not use.)	All

Parameter No.	Size	Name	Setting Range	Setting Unit	Default Setting	Applicable Motors	When Enabled	Classi-fication	Refer-ence
Pn825	2	Option Monitor 2 Selec-tion	0000h to FFFFh	–	0000h	All	Immedi-ately	Setup	*1

0000h to 0084h	The settings are the same as those for the Option Monitor 1 Selection.

Parameter No.	Size	Name	Setting Range	Setting Unit	Default Setting	Applicable Motors	When Enabled	Classi-fication	Refer-ence
Pn827	2	Linear Deceleration Constant 1 for Stopping	1 to 65,535	10,000 refer-ence units/s^2	100	All	Immedi-ately *11	Setup	*1
Pn829	2	SVOFF Waiting Time (for SVOFF at Deceleration to Stop)	0 to 65,535	10 ms	0	All	Immedi-ately *11	Setup	*1

Continued on next page.

Continued from previous page.

Parameter No.	Size	Name	Setting Range	Setting Unit	Default Setting	Applicable Motors	When Enabled	Classi-fication	Refer-ence
Pn82A M2 *14	2	Option Field Allocations 1	0000h to 1E1Eh	–	1813h	All	After restart	Setup	*13

	ACCFIL Allocation (Option)	
n.□□□X	0	Allocate bits 0 and 1 to ACCFIL.
	1	Allocate bits 1 and 2 to ACCFIL.
	2	Allocate bits 2 and 3 to ACCFIL.
	3	Allocate bits 3 and 4 to ACCFIL.
	4	Allocate bits 4 and 5 to ACCFIL.
	5	Allocate bits 5 and 6 to ACCFIL.
	6	Allocate bits 6 and 7 to ACCFIL.
	7	Allocate bits 7 and 8 to ACCFIL.
	8	Allocate bits 8 and 9 to ACCFIL.
	9	Allocate bits 9 and 10 to ACCFIL.
	A	Allocate bits 10 and 11 to ACCFIL.
	B	Allocate bits 11 and 12 to ACCFIL.
	C	Allocate bits 12 and 13 to ACCFIL.
	D	Allocate bits 13 and 14 to ACCFIL.
	E	Allocate bits 14 and 15 to ACCFIL.

	ACCFIL Allocation Enable/Disable Selection	
n.□□X□	0	Disable ACCFIL allocation.
	1	Enable ACCFIL allocation.

	G_SEL Allocation (Option)	
n.□X□□	0 to E	The settings are the same as for the ACCFIL allocations.

	G_SEL Allocation Enable/Disable Selection	
n. X□□□	0	Disable G_SEL allocation.
	1	Enable G_SEL allocation.

Continued on next page.

Continued from previous page.

Parameter No.	Size	Name	Setting Range	Setting Unit	Default Setting	Applicable Motors	When Enabled	Classi-fication	Refer-ence
Pn82B M2 *14	2	Option Field Allocations 2	0000h to 1F1Fh	–	1D1Ch	All	After restart	Setup	*13

	V_PPI Allocation (Option)	
n.□□□X	0	Allocate bit 0 to V_PPI.
	1	Allocate bit 1 to V_PPI.
	2	Allocate bit 2 to V_PPI.
	3	Allocate bit 3 to V_PPI.
	4	Allocate bit 4 to V_PPI.
	5	Allocate bit 5 to V_PPI.
	6	Allocate bit 6 to V_PPI.
	7	Allocate bit 7 to V_PPI.
	8	Allocate bit 8 to V_PPI.
	9	Allocate bit 9 to V_PPI.
	A	Allocate bit 10 to V_PPI.
	B	Allocate bit 11 to V_PPI.
	C	Allocate bit 12 to V_PPI.
	D	Allocate bit 13 to V_PPI.
	E	Allocate bit 14 to V_PPI.
	F	Allocate bit 15 to V_PPI.

	V_PPI Allocation Enable/Disable Selection	
n.□□X□	0	Disable V_PPI allocation.
	1	Enable V_PPI allocation.

	P_PI_CLR Allocation (Option)	
n.□X□□	0 to F	The settings are the same as for the V_PPI allocations.

	P_PI_CLR Allocation Enable/Disable Selection	
n.X□□□	0	Disable P_PI_CLR allocation.
	1	Enable P_PI_CLR allocation.

Parameter No.	Size	Name	Setting Range	Setting Unit	Default Setting	Applicable Motors	When Enabled	Classi-fication	Refer-ence
Pn82C M2 *14	2	Option Field Allocations 3	0000h to 1F1Fh	–	1F1Eh	All	After restart	Setup	*13

	P_CL Allocation (Option)	
n.□□□X	0 to F	The settings are the same as for the V_PPI allocations.

	P_CL Allocation Enable/Disable Selection	
n.□□X□	0	Disable P_CL allocation.
	1	Enable P_CL allocation.

	N_CL Allocation (Option)	
n.□X□□	0 to F	The settings are the same as for the V_PPI allocations.

	N_CL Allocation Enable/Disable Selection	
n.X□□□	0	Disable N_CL allocation.
	1	Enable N_CL allocation.

Continued on next page.

Continued from previous page.

Parameter No.	Size	Name	Setting Range	Setting Unit	Default Setting	Applicable Motors	When Enabled	Classi-fication	Refer-ence
Pn82D M2 *14	2	Option Field Allocations 4	0000h to 1F1Ch	–	0000h	All	After restart	Setup	*13

n.□□□X	BANK_SEL1 Allocation (Option)
0	Allocate bits 0 to 3 to BANK_SEL1.
1	Allocate bits 1 to 4 to BANK_SEL1.
2	Allocate bits 2 to 5 to BANK_SEL1.
3	Allocate bits 3 to 6 to BANK_SEL1.
4	Allocate bits 4 to 7 to BANK_SEL1.
5	Allocate bits 5 to 8 to BANK_SEL1.
6	Allocate bits 6 to 9 to BANK_SEL1.
7	Allocate bits 7 to 10 to BANK_SEL1.
8	Allocate bits 8 to 11 to BANK_SEL1.
9	Allocate bits 9 to 12 to BANK_SEL1.
A	Allocate bits 10 to 13 to BANK_SEL1.
B	Allocate bits 11 to 14 to BANK_SEL1.
C	Allocate bits 12 to 15 to BANK_SEL1.

n.□□X□	BANK_SEL1 Allocation Enable/Disable Selection
0	Disable BANK_SEL1 allocation.
1	Enable BANK_SEL1 allocation.

n.□X□□	LT_DISABLE Allocation (Option)
0 to F	The settings are the same as for the V_PPI allocations.

n.X□□□	LT_DISABLE Allocation Enable/Disable Selection
0	Disable LT_DISABLE allocation.
1	Enable LT_DISABLE allocation.

Continued on next page.

Continued from previous page.

Parameter No.	Size	Name	Setting Range	Setting Unit	Default Setting	Applicable Motors	When Enabled	Classi-fication	Refer-ence
Pn82E M2 *14	2	Option Field Allocations 5	0000h to 1D1Fh	–	0000h	All	After restart	Setup	*13

n.□□□X	Reserved parameter (Do not change.)	
n.□□X□	Reserved parameter (Do not change.)	
n.□X□□	OUT_SIGNAL Allocation (Option)	
	0	Allocate bits 0 to 2 to OUT_SIGNAL.
	1	Allocate bits 1 to 3 to OUT_SIGNAL.
	2	Allocate bits 2 to 4 to OUT_SIGNAL.
	3	Allocate bits 3 to 5 to OUT_SIGNAL.
	4	Allocate bits 4 to 6 to OUT_SIGNAL.
	5	Allocate bits 5 to 7 to OUT_SIGNAL.
	6	Allocate bits 6 to 8 to OUT_SIGNAL.
	7	Allocate bits 7 to 9 to OUT_SIGNAL.
	8	Allocate bits 8 to 10 to OUT_SIGNAL.
	9	Allocate bits 9 to 11 to OUT_SIGNAL.
	A	Allocate bits 10 to 12 to OUT_SIGNAL.
	B	Allocate bits 11 to 13 to OUT_SIGNAL.
	C	Allocate bits 12 to 14 to OUT_SIGNAL.
	D	Allocate bits 13 to 15 to OUT_SIGNAL.
n.X□□□	OUT_SIGNAL Allocation Enable/Disable Selection	
	0	Disable OUT_SIGNAL allocation.
	1	Enable OUT_SIGNAL allocation.

Pn833	2	Motion Settings	0000h to 0001h	–	0000h	All	After restart	Setup	*1

n.□□□X	Linear Acceleration/Deceleration Constant Selection	
	0	Use Pn80A to Pn80F and Pn827. (The settings of Pn834 to Pn840 are ignored.)
	1	Use Pn834 to Pn840. (The settings of Pn80A to Pn80F and Pn827 are ignored.)
n.□□X□	Reserved parameter (Do not change.)	
n.□X□□	Reserved parameter (Do not change.)	
n.X□□□	Reserved parameter (Do not change.)	

Pn834	4	First Stage Linear Accel-eration Constant 2	1 to 20,971,520	10,000 refer-ence units/s^2	100	All	Immedi-ately *11	Setup	*1
Pn836	4	Second Stage Linear Acceleration Constant 2	1 to 20,971,520	10,000 refer-ence units/s^2	100	All	Immedi-ately *11	Setup	*1
Pn838	4	Acceleration Constant Switching Speed 2	0 to 2,097,152,000	1 refer-ence unit/s	0	All	Immedi-ately *11	Setup	*1
Pn83A	4	First Stage Linear Deceleration Constant 2	1 to 20,971,520	10,000 refer-ence units/s^2	100	All	Immedi-ately *11	Setup	*1

Continued on next page.

Continued from previous page.

Parameter No.	Size	Name	Setting Range	Setting Unit	Default Setting	Applicable Motors	When Enabled	Classification	Reference
Pn83C	4	Second Stage Linear Deceleration Constant 2	1 to 20,971,520	10,000 reference units/s^2	100	All	Immediately *11	Setup	*1
Pn83E	4	Deceleration Constant Switching Speed 2	0 to 2,097,152,000	1 reference unit/s	0	All	Immediately *11	Setup	*1
Pn840	4	Linear Deceleration Constant 2 for Stopping	1 to 20,971,520	10,000 reference units/s^2	100	All	Immediately *11	Setup	*1
Pn842 *15	4	Second Origin Approach Speed 1	0 to 20,971,520	100 reference units/s	0	All	Immediately *11	Setup	*1
Pn844 *16	4	Second Origin Approach Speed 2	0 to 20,971,520	100 reference units/s	0	All	Immediately *11	Setup	*1
Pn846	2	POSING Command Scurve Acceleration/ Deceleration Rate	0 to 50	1%	0	All	Immediately *11	Setup	–
Pn850	2	Number of Latch Sequences	0 to 8	–	0	All	Immediately	Setup	*1
Pn851	2	Continuous Latch Sequence Count	0 to 255	–	0	All	Immediately	Setup	*1
Pn852	2	Latch Sequence 1 to 4 Settings	0000h to 3333h	–	0000h	All	Immediately	Setup	*1

n.□□□X	Latch Sequence 1 Signal Selection	
	0	Phase C
	1	EXT1 signal
	2	EXT2 signal
	3	EXT3 signal
n.□□X□	Latch Sequence 2 Signal Selection	
	0 to 3	The settings are the same as those for the Latch Sequence 1 Signal Selection.
n.□X□□	Latch Sequence 3 Signal Selection	
	0 to 3	The settings are the same as those for the Latch Sequence 1 Signal Selection.
n.X□□□	Latch Sequence 4 Signal Selection	
	0 to 3	The settings are the same as those for the Latch Sequence 1 Signal Selection.

Continued on next page.

Continued from previous page.

Parameter No.	Size	Name	Setting Range	Setting Unit	Default Setting	Applicable Motors	When Enabled	Classi-fication	Refer-ence
Pn853	2	Latch Sequence 5 to 8 Settings	0000h to 3333h	–	0000h	All	Immedi-ately	Setup	*1

	Latch Sequence 5 Signal Selection	
n.□□□X	0	Phase C
	1	EXT1 signal
	2	EXT2 signal
	3	EXT3 signal

	Latch Sequence 6 Signal Selection	
n.□□X□	0 to 3	The settings are the same as those for the Latch Sequence 5 Signal Selection.

	Latch Sequence 7 Signal Selection	
n.□X□□	0 to 3	The settings are the same as those for the Latch Sequence 5 Signal Selection.

	Latch Sequence 8 Signal Selection	
n.X□□□	0 to 3	The settings are the same as those for the Latch Sequence 5 Signal Selection.

Parameter No.	Size	Name	Setting Range	Setting Unit	Default Setting	Applicable Motors	When Enabled	Classi-fication	Refer-ence
Pn860 M3 *9	2	SVCMD_IO Input Signal Monitor Allocations 1	0000h to 1717h	–	0000h	All	Immedi-ately	Setup	*1

	Input Signal Monitor Allocation for CN1-13 (SVCMD_IO)	
n.□□□X	0	Allocate bit 24 (IO_STS1) to CN1-13 input signal monitor.
	1	Allocate bit 25 (IO_STS2) to CN1-13 input signal monitor.
	2	Allocate bit 26 (IO_STS3) to CN1-13 input signal monitor.
	3	Allocate bit 27 (IO_STS4) to CN1-13 input signal monitor.
	4	Allocate bit 28 (IO_STS5) to CN1-13 input signal monitor.
	5	Allocate bit 29 (IO_STS6) to CN1-13 input signal monitor.
	6	Allocate bit 30 (IO_STS7) to CN1-13 input signal monitor.
	7	Allocate bit 31 (IO_STS8) to CN1-13 input signal monitor.

	CN1-13 Input Signal Monitor Enable/Disable Selection	
n.□□X□	0	Disable allocation for CN1-13 input signal monitor.
	1	Enable allocation for CN1-13 input signal monitor.

	Input Signal Monitor Allocation for CN1-7 (SVCMD_IO)	
n.□X□□	0 to 7	The settings are the same as the CN1-13 allocations.

	CN1-7 Input Signal Monitor Enable/Disable Selection	
n.X□□□	0	Disable allocation for CN1-7 input signal monitor.
	1	Enable allocation for CN1-7 input signal monitor.

Continued on next page.

Continued from previous page.

Parameter No.	Size	Name	Setting Range	Setting Unit	Default Setting	Applicable Motors	When Enabled	Classification	Reference
Pn861 M3 *9	2	SVCMD_IO Input Signal Monitor Allocations 2	0000h to 1717h	–	0000h	All	Immediately	Setup	*1

n.□□□X	Input Signal Monitor Allocation for CN1-8 (SVCMD_IO)	
	0 to 7	The settings are the same as the CN1-13 allocations.
n.□□X□	CN1-8 Input Signal Monitor Enable/Disable Selection	
	0	Disable allocation for CN1-8 input signal monitor.
	1	Enable allocation for CN1-8 input signal monitor.
n.□X□□	Input Signal Monitor Allocation for CN1-9 (SVCMD_IO)	
	0 to 7	The settings are the same as the CN1-13 allocations.
n.X□□□	CN1-9 Input Signal Monitor Enable/Disable Selection	
	0	Disable allocation for CN1-9 input signal monitor.
	1	Enable allocation for CN1-9 input signal monitor.

Pn862 M3 *9	2	SVCMD_IO Input Signal Monitor Allocations 3	0000h to 1717h	–	0000h	All	Immediately	Setup	*1

n.□□□X	Input Signal Monitor Allocation for CN1-10 (SVCMD_IO)	
	0 to 7	The settings are the same as the CN1-13 allocations.
n.□□X□	CN1-10 Input Signal Monitor Enable/Disable Selection	
	0	Disable allocation for CN1-10 input signal monitor.
	1	Enable allocation for CN1-10 input signal monitor.
n.□X□□	Input Signal Monitor Allocation for CN1-11 (SVCMD_IO)	
	0 to 7	The settings are the same as the CN1-13 allocations.
n.X□□□	CN1-11 Input Signal Monitor Enable/Disable Selection	
	0	Disable allocation for CN1-11 input signal monitor.
	1	Enable allocation for CN1-11 input signal monitor.

Pn863 M3 *9	2	SVCMD_IO Input Signal Monitor Allocations 4	0000h to 1717h	–	0000h	All	Immediately	Setup	*1

n.□□□X	Input Signal Monitor Allocation for CN1-12 (SVCMD_IO)	
	0 to 7	The settings are the same as the CN1-13 allocations.
n.□□X□	CN1-12 Input Signal Monitor Enable/Disable Selection	
	0	Disable allocation for CN1-12 input signal monitor.
	1	Enable allocation for CN1-12 input signal monitor.
n.□X□□	Reserved parameter (Do not change.)	
n.X□□□	Reserved parameter (Do not change.)	

Continued on next page.

Continued from previous page.

Parameter No.	Size	Name	Setting Range	Setting Unit	Default Setting	Applicable Motors	When Enabled	Classi-fication	Refer-ence
Pn868 M3 *9	2	SVCMD_IO Output Signal Monitor Allocations 1	0000h to 1717h	–	0000h	All	Immediately	Setup	*1

n.□□□X	Output Signal Monitor Allocation for CN1-1 and CN1-2 (SVCMD_IO)	
	0	Allocate bit 24 (IO_STS1) to CN1-1/CN1-2 output signal monitor.
	1	Allocate bit 25 (IO_STS2) to CN1-1/CN1-2 output signal monitor.
	2	Allocate bit 26 (IO_STS3) to CN1-1/CN1-2 output signal monitor.
	3	Allocate bit 27 (IO_STS4) to CN1-1/CN1-2 output signal monitor.
	4	Allocate bit 28 (IO_STS5) to CN1-1/CN1-2 output signal monitor.
	5	Allocate bit 29 (IO_STS6) to CN1-1/CN1-2 output signal monitor.
	6	Allocate bit 30 (IO_STS7) to CN1-1/CN1-2 output signal monitor.
	7	Allocate bit 31 (IO_STS8) to CN1-1/CN1-2 output signal monitor.
n.□□X□	CN1-1/CN1-2 Output Signal Monitor Enable/Disable Selection	
	0	Disable allocation for CN1-1/CN1-2 output signal monitor.
	1	Enable allocation for CN1-1/CN1-2 output signal monitor.
n.□X□□	Output Signal Monitor Allocation for CN1-23 and CN1-24 (SVCMD_IO)	
	0 to 7	The settings are the same as the CN1-1/CN1-2 allocations.
n.X□□□	CN1-23/CN1-24 Output Signal Monitor Enable/Disable Selection	
	0	Disable allocation for CN1-23/CN1-24 output signal monitor.
	1	Enable allocation for CN1-23/CN1-24 output signal monitor.

Pn869 M3 *9	2	SVCMD_IO Output Signal Monitor Allocations 2	0000h to 1717h	–	0000h	All	Immediately	Setup	*1

n.□□□X	Output Signal Monitor Allocation for CN1-25 and CN1-26 (SVCMD_IO)	
	0 to 7	The settings are the same as the CN1-1/CN1-2 allocations.
n.□□X□	CN1-25/CN1-26 Output Signal Monitor Enable/Disable Selection	
	0	Disable allocation for CN1-25/CN1-26 output signal monitor.
	1	Enable allocation for CN1-25/CN1-26 output signal monitor.
n.□X□□	Reserved parameter (Do not change.)	
n.X□□□	Reserved parameter (Do not change.)	

Pn880	2	Station Address Monitor (for maintenance, read only)	03h to EFh	–	–	All	–	Setup	page 5-13
Pn881	2	Set Transmission Byte Count Monitor [bytes] (for maintenance, read only)	17, 32, 48	–	–	All	–	Setup	page 5-13
Pn882	2	Transmission Cycle Setting Monitor [× 0.25 μs] (for maintenance, read only)	0h to FFFFh	–	–	All	–	Setup	page 5-13
Pn883	2	Communications Cycle Setting Monitor [transmission cycles] (for maintenance, read only)	0 to 32	–	–	All	–	Setup	page 5-13

Continued on next page.

Continued from previous page.

Parameter No.	Size	Name	Setting Range	Setting Unit	Default Setting	Applicable Motors	When Enabled	Classification	Reference
Pn884 M3 *9	2	Communications Controls 2	0000h to 0001h	–	0000h	All	Immediately	Setup	*1
Pn88A	2	MECHATROLINK Receive Error Counter Monitor (for maintenance, read only)	0 to 65,535	–	0	All	–	Setup	–
Pn890 to Pn8A6	4	Command Data Monitor during Alarm/Warning (for maintenance, read only)	0h to FFFFFFFFh	–	0h	All	–	Setup	*1
Pn8A8 to Pn8BE	4	Response Data Monitor during Alarm/Warning (for maintenance, read only)	0h to FFFFFFFFh	–	0h	All	–	Setup	*1
Pn900	2	Number of Parameter Banks	0 to 16	–	0	All	After restart	Setup	*1
Pn901	2	Number of Parameter Bank Members	0 to 15	–	0	All	After restart	Setup	*1
Pn902 to Pn910	2	Parameter Bank Member Definition	0000h to 08FFh	–	0000h	All	After restart	Setup	*1
Pn920 to Pn95F	2	Parameter Bank Data (Not saved in nonvolatile memory.)	0000h to FFFFh	–	0000h	All	Immediately	Setup	*1

n.□□□X	MECHATROLINK Communications Error Holding Brake Signal Setting	
	0	Maintain the status set by the BRK_ON or BRK_OFF command when a MECHATROLINK communications error occurs.
	1	Apply the holding brake when a MECHATROLINK communications error occurs.
n.□□X□	Reserved parameter (Do not change.)	
n.□X□□	Reserved parameter (Do not change.)	
n.X□□□	Reserved parameter (Do not change.)	

*1. Refer to the following manual for details.
Σ-7-Series MECHATROLINK-III Communications Standard Servo Profile Command Manual (Manual No.: SIEP S800001 31)

*2. Set a percentage of the motor rated torque.

*3. These parameters are for SERVOPACKs with a Safety Module. Refer to the following manual for details.
Σ-V-Series/Σ-V-Series for Large-Capacity Models/Σ-7-Series User's Manual Safety Module (Manual No.: SIEP C720829 06)

*4. Normally set this parameter to 0. If you use an External Regenerative Resistor, set the capacity (W) of the External Regenerative Resistor.

*5. The upper limit is the maximum output capacity (W) of the SERVOPACK.

*6. These parameters are for SERVOPACKs with the dynamic brake option. Refer to the following manual for details.
Σ-7-Series Σ-7S/Σ-7W SERVOPACK with Dynamic Brake Hardware Option Specifications Product Manual (Manual No.: SIEP S800001 73)

*7. The SGLFW2 is the only Yaskawa Linear Servomotor that supports this function.

*8. Enabled only when Pn61A is set to n.□□□2 or n.□□□3.

*9. This parameter is valid only when the MECHATROLINK-III standard servo profile is used.

*10. The parameter setting is enabled after SENS_ON command execution is completed.

*11. Change the setting when the reference is stopped (i.e., while DEN is set to 1). If you change the setting during operation, the reference output will be affected.

*12. The settings are updated only if the reference is stopped (i.e., only if DEN is set to 1).

*13. Refer to the following manual for details.
Σ-7-Series MECHATROLINK-II Communications Command Manual (Manual No.: SIEP S800001 30)

*14. This parameter is valid only when the MECHATROLINK-II-compatible profile is used.

*15. The setting of Pn842 is valid while Pn817 is set to 0.

*16. The setting of Pn844 is valid while Pn818 is set to 0.

*17. These items can be monitored using SERVOPACKs with software version 002C or higher.

13.2 List of MECHATROLINK-III Common Parameters

13.2.1 Interpreting the Parameter Lists

The types of motors to which the parameter applies.
- All: The parameter is used for both Rotary Servomotors and Linear Servomotors.
- Rotary: The parameter is used for only Rotary Servomotors.
- Linear: The parameter is used for only Linear Servomotors.

Rotary Servomotor terms are used for parameters that are applicable to all Servomotors. If you are using a Linear Servomotor, you need to interpret the terms accordingly. Refer to the following section for details.

☞ ◆ *Differences in Terms for Rotary Servomotors and Linear Servomotors* on page x

Indicates when a change to the parameter will be effective.
"After restart" indicates parameters that will be effective after one of the following is executed.
- The power supply is turned OFF and ON again.
- The CONFIG command is sent.
- A software reset is executed.

Parameter No.	Size	Name	Setting Range	Setting Unit [Resolution]	Default Setting	Applicable Motors	When Enabled	Classi-fication
61 PnAC2	4	Speed Loop Gain	1,000 to 2,000,000	0.001 Hz [0.1 Hz]	40000	All	Immedi-ately	Tuning

You can set the parameter in increments of the setting unit.
However, if a unit is given in square brackets, the setting is automatically converted to the resolution given in the square brackets.

13.2.2 List of MECHATROLINK-III Common Parameters

The following table lists the common MECHATROLINK-III parameters. These common parameters are used to make settings from the host controller via MECHATROLINK communications. Do not change the settings with the Digital Operator or any other device.

Parameter No.	Size	Name	Setting Range	Setting Unit [Resolution]	Default Setting	Applicable Motors	When Enabled	Classi-fication
01 PnA02	4	Encoder Type Selec-tion (read only)	0h or 1h	–	–	All	–	Device information
		0000h: Absolute encoder 0001h: Incremental encoder						
02 PnA04	4	Motor Type Selection (read only)	0h or 1h	–	–	All	–	
		0000h: Rotary Servomotor 0001h: Linear Servomotor						
03 PnA06	4	Semi-closed/Fully-closed Selection (read only)	0h or 1h	–	–	All	–	
		0000h: Semi-closed 0001h: Fully-closed						
04 PnA08	4	Rated Motor Speed (read only)	0h to FFFFFFFFh	1 min^{-1}	–	All	–	

Continued on next page.

Continued from previous page.

Parameter No.	Size	Name	Setting Range	Setting Unit [Resolution]	Default Setting	Applicable Motors	When Enabled	Classi-fication
05 PnA0A	4	Maximum Output Speed (read only)	0h to FFFFFFFFh	1 min^{-1}	–	All	–	Device information
06 PnA0C	4	Speed Multiplier (read only)	-1,073,741,823 to 1,073,741,823	–	–	All	–	
07 PnA0E	4	Rated Torque (read only)	0h to FFFFFFFFh	1 N·m	–	All	–	
08 PnA10	4	Maximum Output Torque (read only)	0h to FFFFFFFFh	1 N·m	–	All	–	
09 PnA12	4	Torque Multiplier (read only)	-1,073,741,823 to 1,073,741,823	–	–	All	–	
0A PnA14	4	Resolution (read only)	0h to FFFFFFFFh	1 pulse/rev	–	Rotary	–	
0B PnA16	4	Scale Pitch	0 to 65,536,000	1 nm [0.01 μm]	0	Linear	After restart*1	
0C PnA18	4	Pulses per Scale Pitch (read only)	0h to FFFFFFFFh	1 pulse/ pitch	–	Linear	–	
21 PnA42	4	Electronic Gear Ratio (Numerator)	1 to 1,073,741,824	–	16	All	After restart	Machine specifications
22 PnA44	4	Electronic Gear Ratio (Denominator)	1 to 1,073,741,824	–	1	All	After restart	
23 PnA46	4	Absolute Encoder Origin Offset	-1,073,741,823 to 1,073,741,823	1 reference unit	0	All	Immedi-ately*1	
24 PnA48	4	Multiturn Limit Setting	0 to 65,535	1 Rev	65535	Rotary	After restart	
25 PnA4A	4	Limit Setting	0h to 33h	–	0h	All	After restart	
		Bit 0: P-OT (0: Enabled, 1: Disabled) Bit 1: N-OT (0: Enabled, 1: Disabled) Bit 2: Reserved. Bit 3: Reserved. Bit 4: P-SOT (0: Disabled, 1: Enabled) Bit 5: N-SOT (0: Disabled, 1: Enabled) Bits 6 to 31: Reserved.						
26 PnA4C	4	Forward Software Limit	-1,073,741,823 to 1,073,741,823	1 reference unit	1073741823	All	Immedi-ately	
27 PnA4E	4	Reserved parameter (Do not change.)	–	–	0	All	Immedi-ately	
28 PnA50	4	Reverse Software Limit	-1,073,741,823 to 1,073,741,823	1 reference unit	-1073741823	All	Immedi-ately	
29 PnA52	4	Reserved parameter (Do not change.)	–	–	0	All	Immedi-ately	

Continued on next page.

Continued from previous page.

Parameter No.	Size	Name	Setting Range	Setting Unit [Resolution]	Default Setting	Applicable Motors	When Enabled	Classi-fication
41 PnA82	4	Speed Unit Selection*2	0h to 4h	–	0h	All	After restart	Unit settings
		0000h: Reference units/s 0001h: Reference units/min 0002h: Percentage (%) of rated speed*3 0003h: min^{-1}*3 0004h: Maximum motor speed/40000000h*4						
42 PnA84	4	Speed Base Unit Selection*3, *4 (Set the value of n from the following formula: Speed unit selection (41 PnA82) × 10^n)	-3 to 3	–	0	All	After restart	
43 PnA86	4	Position Unit Selection	0h	–	0h	All	After restart	
		0000h: Reference units						
44 PnA88	4	Position Base Unit Selection (Set the value of n from the following formula: Position unit selection (43 PnA86) × 10^n)	0	–	0	All	After restart	
45 PnA8A	4	Acceleration Unit Selection	0h	–	0h	All	After restart	
		0000h: Reference units/s^2						
46 PnA8C	4	Acceleration Base Unit Selection (Set the value of n from the following formula: Acceleration unit selection (45 PnA8A) × 10^n)	4 to 6	–	4	All	After restart	
47 PnA8E	4	Torque Unit Selection	1h or 2h	–	1h	All	After restart	
		0001h: Percentage (%) of rated torque 0002h: Maximum torque/40000000h*5						
48 PnA90	4	Torque Base Unit Selection*5 (Set the value of n from the following formula: Torque unit selection (47 PnA8E) × 10^n)	-5 to 0	–	0	All	After restart	

Continued on next page.

Continued from previous page.

Parameter No.	Size	Name	Setting Range	Setting Unit [Resolution]	Default Setting	Applicable Motors	When Enabled	Classification
49 PnA92	4	Supported Unit Systems (read only)	–	–	0601011Fh	All	–	Unit settings

Speed Units	
Bit 0	Reference units/s (1: Enabled)
Bit 1	Reference units/min (1: Enabled)
Bit 2	Percentage (%) of rated speed (1: Enabled)
Bit 3	min^{-1} (rpm) (1: Enabled)
Bit 4	Maximum motor speed/4000000h (1: Enabled)
Bits 5 to 7	Reserved (0: Disabled).
Position Units	
Bit 8	Reference units (1: Enabled)
Bits 9 to 15	Reserved (0: Disabled).
Acceleration Units	
Bit 16	Reference units/s^2 (1: Enabled)
Bit 17	ms (acceleration time required to reach rated speed) (0: Disabled)
Bits 18 to 23	Reserved (0: Disabled).
Torque Units	
Bit 24	N·m (0: Disabled)
Bit 25	Percentage (%) of rated torque (1: Enabled)
Bit 26	Maximum torque/40000000h
Bits 27 to 31	Reserved (0: Disabled).

Parameter No.	Size	Name	Setting Range	Setting Unit [Resolution]	Default Setting	Applicable Motors	When Enabled	Classification
61 PnAC2	4	Speed Loop Gain	1,000 to 2,000,000	0.001 Hz [0.1 Hz]	40000	All	Immediately	Tuning
62 PnAC4	4	Speed Loop Integral Time Constant	150 to 512,000	1 μs [0.01 ms]	20000	All	Immediately	
63 PnAC6	4	Position Loop Gain	1,000 to 2,000,000	0.001/s [0.1/s]	40000	All	Immediately	
64 PnAC8	4	Feedforward Compensation	0 to 100	1%	0	All	Immediately	
65 PnACA	4	Position Loop Integral Time Constant	0 to 5,000,000	1 μs [0.1 ms]	0	All	Immediately	
66 PnACC	4	Positioning Completed Width	0 to 1,073,741,824	1 reference unit	7	All	Immediately	
67 PnACE	4	Near Signal Width	1 to 1,073,741,824	1 reference unit	1073741824	All	Immediately	
81 PnB02	4	Exponential Acceleration/Deceleration Time Constant	0 to 510,000	1 μs [0.1 ms]	0	All	Immediately*6	
82 PnB04	4	Average Movement Time	0 to 510,000	1 μs [0.1 ms]	0	All	Immediately*6	
83 PnB06	4	External Positioning Final Travel Distance	-1,073,741,823 to 1,073,741,823	1 reference unit	100	All	Immediately	
84 PnB08	4	Origin Approach Speed	0h to 3FFFFFFFh	10^{-3} min^{-1}	× 5,000h reference units/s converted to 10^{-3} min^{-1}	All	Immediately	
85 PnB0A	4	Origin Return Creep Speed	0h to 3FFFFFFFh	10^{-3} min^{-1}	× 500h reference units/s converted to 10^{-3} min^{-1}	All	Immediately	

Continued on next page.

Continued from previous page.

Parameter No.	Size	Name	Setting Range	Setting Unit [Resolution]	Default Setting	Applicable Motors	When Enabled	Classi-fication
86 PnB0C	4	Final Travel Distance for Origin Return	-1,073,741,823 to 1,073,741,823	1 reference unit	100	All	Immedi-ately	Tuning
87 PnB0E	4	Fixed Monitor Selec-tion 1	0h to Fh	–	1h	All	Immedi-ately	

0000h	APOS
0001h	CPOS
0002h	PERR
0003h	LPOS1
0004h	LPOS2
0005h	FSPD
0006h	CSPD
0007h	TRQ
0008h	ALARM
0009h	MPOS
000Ah	Reserved (undefined value).
000Bh	Reserved (undefined value).
000Ch	CMN1 (common monitor 1)
000Dh	CMN2 (common monitor 2)
000Eh	OMN1 (optional monitor 1)
000Fh	OMN2 (optional monitor 2)

Continued on next page.

Continued from previous page.

Parameter No.	Size	Name	Setting Range	Setting Unit [Resolution]	Default Setting	Applicable Motors	When Enabled	Classification
88 PnB10	4	Fixed Monitor Selection 2	0h to Fh	–	0h	All	Immediately	Command-related parameters

0000h to 000Fh	The settings are the same as those for Fixed Monitor Selection 1.

Parameter No.	Size	Name	Setting Range	Setting Unit [Resolution]	Default Setting	Applicable Motors	When Enabled	Classification
89 PnB12	4	SEL_MON (CMN1) Monitor Selection 1	0h to 9h	–	0h	All	Immediately	Command-related parameters

0000h	TPOS (target position in reference coordinate system)
0001h	IPOS (reference position in reference coordinate system)
0002h	POS_OFFSET (offset set in POS_SET (Set Coordinate System) command)
0003h	TSPD (target speed)
0004h	SPD_LIM (speed limit)
0005h	TRQ_LIM (torque limit)
0006h	SV_STAT (servo actual operating status) Monitor Description Byte 1: Current communications phase 00h: Phase 0 01h: Phase 1 02h: Phase 2 03h: Phase 3 Byte 2: Current control mode 00h: Position control mode 01h: Speed control mode 02h: Torque control mode Byte 3: Reserved Byte 4: Expansion signal monitor

Bit	Name	Description	Value	Setting
Bit 0	LT_RDY1	Processing status for latch detection for LT_REQ1 in SVCM-D_CTRL region	0	Latch detection not yet processed.
			1	Processing latch detection in progress.
Bit 1	LT_RDY1	Processing status for latch detection for LT_REQ2 in SVCM-D_CTRL region	0	Latch detection not yet processed.
			1	Processing latch detection in progress.
Bits 2 and 3	LT_SEL1R	Latch signal	0	Phase C
			1	External input signal 1
			2	External input signal 2
			3	External input signal 3
Bits 4 and 5	LT_SEL2R	Latch signal	0	Phase C
			1	External input signal 1
			2	External input signal 2
			3	External input signal 3
Bit 6	Reserved (0).			

0007h	Reserved.	
0008h	INIT_PGPOS (Low)	Lower 32 bits of initial encoder position converted to 64-bit position reference data
0009h	INIT_PGPOS (High)	Upper 32 bits of initial encoder position converted to 64-bit position reference data

Continued on next page.

Continued from previous page.

Parameter No.	Size	Name	Setting Range	Setting Unit [Resolution]	Default Setting	Applicable Motors	When Enabled	Classification
8A PnB14	4	SEL_MON (CMN2) Monitor Selection 2	0h to 9h	–	0h	All	Immediately	Command-related parameters
		0000h to 0009h: The settings are the same as those for SEL_MON Monitor Selection 1.						
8B PnB16	4	Origin Detection Width	0 to 250	1 reference unit	10	All	Immediately	
8C PnB18	4	Forward Torque Limit	0 to 800	1%	100	All	Immediately	
8D PnB1A	4	Reverse Torque Limit	0 to 800	1%	100	All	Immediately	
8E PnB1C	4	Zero Speed Detection Range	1,000 to 10,000,000	10^{-3} min^{-1}	20000	All	Immediately	
8F PnB1E	4	Speed Coincidence Signal Detection Width	0 to 100,000	10^{-3} min^{-1}	10000	All	Immediately	
90 PnB20	4	Servo Command Control Field Enable/Disable Selections (read only)	–	–	0FFF3F3Fh	All	–	

Bit 0	CMD_PAUSE (1: Enabled)
Bit 1	CMD_CANCEL (1: Enabled)
Bits 2 and 3	STOP_MODE (1: Enabled)
Bits 4 and 5	ACCFIL (1: Enabled)
Bits 6 and 7	Reserved (0: Disabled).
Bit 8	LT_REQ1 (1: Enabled)
Bit 9	LT_REQ2 (1: Enabled)
Bits 10 and 11	LT_SEL1 (1: Enabled)
Bits 12 and 13	LT_SEL2 (1: Enabled)
Bits 14 and 15	Reserved (0: Disabled).
Bits 16 to 19	SEL_MON1 (1: Enabled)
Bits 20 to 23	SEL_MON2 (1: Enabled)
Bits 24 to 27	SEL_MON3 (1: Enabled)
Bits 28 to 31	Reserved (0: Disabled).

Continued on next page.

Continued from previous page.

Parameter No.	Size	Name	Setting Range	Setting Unit [Resolution]	Default Setting	Applicable Motors	When Enabled	Classification
91 PnB22	4	Servo Status Field Enable/Disable Selections (read only)	–	–	0FFF3F33 h	All	–	Command-related parameters

Bit 0	CMD_PAUSE_CMP (1: Enabled)
Bit 1	CMD_CANCEL_CMP (1: Enabled)
Bit 2 and 3	Reserved (0: Disabled).
Bits 4 and 5	ACCFIL (1: Enabled)
Bits 6 and 7	Reserved (0: Disabled).
Bit 8	L_CMP1 (1: Enabled)
Bit 9	L_CMP2 (1: Enabled)
Bit 10	POS_RDY (1: Enabled)
Bit 11	PON (1: Enabled)
Bit 12	M_RDY (1: Enabled)
Bit 13	SV_ON (1: Enabled)
Bits 14 and 15	Reserved (0: Disabled).
Bits 16 to 19	SEL_MON1 (1: Enabled)
Bits 20 to 23	SEL_MON2 (1: Enabled)
Bits 24 to 27	SEL_MON3 (1: Enabled)
Bits 28 to 31	Reserved (0: Disabled).

92 PnB24	4	Output Bit Enable/ Disable Selections (read only)	–	–	007F01F0 h	All	–	Command-related parameters

Bits 0 to 3	Reserved (0: Disabled).
Bit 4	V_PPI (1: Enabled)
Bit 5	P_PPI (1: Enabled)
Bit 6	P_CL (1: Enabled)
Bit 7	N_CL (1: Enabled)
Bit 8	G_SEL (1: Enabled)
Bits 9 to 11	G_SEL (0: Disabled)
Bits 12 to 15	Reserved (0: Disabled).
Bits 16 to 19	BANK_SEL (1: Enabled)
Bits 20 to 22	SO1 to SO3 (1: Enabled)
Bit 23	Reserved (0: Disabled).
Bits 24 to 31	Reserved (0: Disabled).

Continued on next page.

Continued from previous page.

Parameter No.	Size	Name	Setting Range	Setting Unit [Resolution]	Default Setting	Applicable Motors	When Enabled	Classi-fication
93 PnB26	4	Input Bit Enable/Dis-able Selections (read only)	–	–	FF0FFEFE h	All	–	Command-related parameters

Bit 0	Reserved (0: Disabled).
Bit 1	DEC (1: Enabled)
Bit 2	P-OT (1: Enabled)
Bit 3	N-OT (1: Enabled)
Bit 4	EXT1 (1: Enabled)
Bit 5	EXT2 (1: Enabled)
Bit 6	EXT3 (1: Enabled)
Bit 7	ESTP (1: Enabled)
Bit 8	Reserved (0: Disabled).
Bit 9	BRK_ON (1: Enabled)
Bit 10	P-SOT (1: Enabled)
Bit 11	N-SOT (1: Enabled)
Bit 12	DEN (1: Enabled)
Bit 13	NEAR (1: Enabled)
Bit 14	PSET (1: Enabled)
Bit 15	ZPOINT (1: Enabled)
Bit 16	T_LIM (1: Enabled)
Bit 17	V_LIM (1: Enabled)
Bit 18	V_CMP (1: Enabled)
Bit 19	ZSPD (1: Enabled)
Bits 20 to 23	Reserved (0: Disabled).
Bits 24 to 31	IO_STS1 to IO_STS8 (1: Enabled)

*1. The parameter setting is enabled after SENS_ON command execution is completed.
*2. When using fully-closed loop control, set the reference units/s.
*3. If you set the Speed Unit Selection (parameter 41) to either 0002h or 0003h, set the Speed Base Unit Selection (parameter 42) to a number between -3 and 0.
*4. If you set the Speed Unit Selection (parameter 41) to 0004h, set the Speed Base Unit Selection (parameter 42) to 0.
*5. If you set the Torque Unit Selection (parameter 47) to 0002h, set the Torque Base Unit Selection (parameter 48) to 0.
*6. Change the setting when the reference is stopped (i.e., while DEN is set to 1). If you change the setting during operation, the reference output will be affected.

13.3 Parameter Recording Table

Use the following table to record the settings of the parameters.

Parameter No.	Default Setting						Name	When Enabled
Pn000	0000h						Basic Function Selections 0	After restart
Pn001	0000h						Application Function Selections 1	After restart
Pn002	0011h						Application Function Selections 2	After restart
Pn006	0002h						Application Function Selections 6	Immediately
Pn007	0000h						Application Function Selections 7	Immediately
Pn008	4000h						Application Function Selections 8	After restart
Pn009	0010h						Application Function Selections 9	After restart
Pn00A	0001h						Application Function Selections A	After restart
Pn00B	0000h						Application Function Selections B	After restart
Pn00C	0000h						Application Function Selections C	After restart
Pn00D	0000h						Application Function Selections D	After restart
Pn00F	0000h						Application Function Selections F	After restart
Pn021	0000h						Reserved parameter	–
Pn022	0000h						Reserved parameter	–
Pn040	0000h						Σ-V Compatible Function Switch	After restart
Pn080	0000h						Application Function Selections 80	After restart
Pn081	0000h						Application Function Selections 81	After restart
Pn100	400						Speed Loop Gain	Immediately
Pn101	2000						Speed Loop Integral Time Constant	Immediately
Pn102	400						Position Loop Gain	Immediately
Pn103	100						Moment of Inertia Ratio	Immediately
Pn104	400						Second Speed Loop Gain	Immediately
Pn105	2000						Second Speed Loop Integral Time Constant	Immediately
Pn106	400						Second Position Loop Gain	Immediately
Pn109	0						Feedforward	Immediately
Pn10A	0						Feedforward Filter Time Constant	Immediately
Pn10B	0000h						Gain Application Selections	*1
Pn10C	200						Mode Switching Level for Torque Reference	Immediately
Pn10D	0						Mode Switching Level for Speed Reference	Immediately
Pn10E	0						Mode Switching Level for Acceleration	Immediately

Continued on next page.

Continued from previous page.

Parameter No.	Default Setting						Name	When Enabled
Pn10F	0						Mode Switching Level for Position Deviation	Immediately
Pn11F	0						Position Integral Time Constant	Immediately
Pn121	100						Friction Compensation Gain	Immediately
Pn122	100						Second Friction Compensation Gain	Immediately
Pn123	0						Friction Compensation Coefficient	Immediately
Pn124	0						Friction Compensation Frequency Correction	Immediately
Pn125	100						Friction Compensation Gain Correction	Immediately
Pn131	0						Gain Switching Time 1	Immediately
Pn132	0						Gain Switching Time 2	Immediately
Pn135	0						Gain Switching Waiting Time 1	Immediately
Pn136	0						Gain Switching Waiting Time 2	Immediately
Pn139	0000h						Automatic Gain Switching Selections 1	Immediately
Pn13D	2000						Current Gain Level	Immediately
Pn140	0100h						Model Following Control-Related Selections	Immediately
Pn141	500						Model Following Control Gain	Immediately
Pn142	1000						Model Following Control Gain Correction	Immediately
Pn143	1000						Model Following Control Bias in the Forward Direction	Immediately
Pn144	1000						Model Following Control Bias in the Reverse Direction	Immediately
Pn145	500						Vibration Suppression 1 Frequency A	Immediately
Pn146	700						Vibration Suppression 1 Frequency B	Immediately
Pn147	1000						Model Following Control Speed Feedforward Compensation	Immediately
Pn148	500						Second Model Following Control Gain	Immediately
Pn149	1000						Second Model Following Gain Control Correction	Immediately
Pn14A	800						Vibration Suppression 2 Frequency	Immediately
Pn14B	100						Vibration Suppression 2 Correction	Immediately
Pn14F	0021h						Control-Related Selections	After restart
Pn160	0010h						Anti-Resonance Control-Related Selections	Immediately
Pn161	1000						Anti-Resonance Frequency	Immediately
Pn162	100						Anti-Resonance Gain Correction	Immediately

Continued on next page.

Continued from previous page.

Parameter No.	Default Setting						Name	When Enabled
Pn163	0						Anti-Resonance Damping Gain	Immediately
Pn164	0						Anti-Resonance Filter Time Constant 1 Correction	Immediately
Pn165	0						Anti-Resonance Filter Time Constant 2 Correction	Immediately
Pn166	0						Anti-Resonance Damping Gain 2	Immediately
Pn170	1401h						Tuning-less Function-Related Selections	*1
Pn181	0						Mode Switching Level for Speed Reference	Immediately
Pn182	0						Mode Switching Level for Acceleration	Immediately
Pn205	65535						Multiturn Limit	After restart
Pn207	0010h						Position Control Function Selections	After restart
Pn20A	32768						Number of External Scale Pitches	After restart
Pn20E	16						Electronic Gear Ratio (Numerator)	After restart
Pn210	1						Electronic Gear Ratio (Denominator)	After restart
Pn212	2048						Number of Encoder Output Pulses	After restart
Pn22A	0000h						Fully-closed Control Selections	After restart
Pn230	0000h						Position Control Expansion Function Selections	After restart
Pn231	0						Backlash Compensation	Immediately
Pn233	0						Backlash Compensation Time Constant	Immediately
Pn281	20						Encoder Output Resolution	After restart
Pn282	0						Linear Encoder Pitch	After restart
Pn304	500						Jogging Speed	Immediately
Pn305	0						Soft Start Acceleration Time	Immediately
Pn306	0						Soft Start Deceleration Time	Immediately
Pn308	0						Speed Feedback Filter Time Constant	Immediately
Pn30A	0						Deceleration Time for Servo OFF and Forced Stops	Immediately
Pn30C	0						Speed Feedforward Average Movement Time	Immediately
Pn310	0000h						Vibration Detection Selections	Immediately
Pn311	100						Vibration Detection Sensitivity	Immediately
Pn312	50						Vibration Detection Level	Immediately
Pn316	10000						Maximum Motor Speed	After restart
Pn324	300						Moment of Inertia Calculation Starting Level	Immediately
Pn383	50						Jogging Speed	Immediately
Pn384	10						Vibration Detection Level	Immediately

Continued on next page.

Continued from previous page.

Parameter No.	Default Setting						Name	When Enabled
Pn385	50						Maximum Motor Speed	After restart
Pn401	100						First Stage First Torque Reference Filter Time Constant	Immediately
Pn402	800						Forward Torque Limit	Immediately
Pn403	800						Reverse Torque Limit	Immediately
Pn404	100						Forward External Torque Limit	Immediately
Pn405	100						Reverse External Torque Limit	Immediately
Pn406	800						Emergency Stop Torque	Immediately
Pn407	10000						Speed Limit during Torque Control	Immediately
Pn408	0000h						Torque-Related Function Selections	*1
Pn409	5000						First Stage Notch Filter Frequency	Immediately
Pn40A	70						First Stage Notch Filter Q Value	Immediately
Pn40B	0						First Stage Notch Filter Depth	Immediately
Pn40C	5000						Second Stage Notch Filter Frequency	Immediately
Pn40D	70						Second Stage Notch Filter Q Value	Immediately
Pn40E	0						Second Stage Notch Filter Depth	Immediately
Pn40F	5000						Second Stage Second Torque Reference Filter Frequency	Immediately
Pn410	50						Second Stage Second Torque Reference Filter Q Value	Immediately
Pn412	100						First Stage Second Torque Reference Filter Time Constant	Immediately
Pn416	0000h						Torque-Related Function Selections 2	Immediately
Pn417	5000						Third Stage Notch Filter Frequency	Immediately
Pn418	70						Third Stage Notch Filter Q Value	Immediately
Pn419	0						Third Stage Notch Filter Depth	Immediately
Pn41A	5000						Fourth Stage Notch Filter Frequency	Immediately
Pn41B	70						Fourth Stage Notch Filter Q Value	Immediately
Pn41C	0						Fourth Stage Notch Filter Depth	Immediately
Pn41D	5000						Fifth Stage Notch Filter Frequency	Immediately
Pn41E	70						Fifth Stage Notch Filter Q Value	Immediately
Pn41F	0						Fifth Stage Notch Filter Depth	Immediately

Continued on next page.

Continued from previous page.

Parameter No.	Default Setting						Name	When Enabled
Pn423	0000h						Speed Ripple Compensation Selections	*1
Pn424	50						Torque Limit at Main Circuit Voltage Drop	Immediately
Pn425	100						Release Time for Torque Limit at Main Circuit Voltage Drop	Immediately
Pn426	0						Torque Feedforward Average Movement Time	Immediately
Pn427	0						Speed Ripple Compensation Enable Speed	Immediately
Pn456	15						Sweep Torque Reference Amplitude	Immediately
Pn460	0101h						Notch Filter Adjustment Selections 1	Immediately
Pn475	0000h						Gravity Compensation-Related Selections	After restart
Pn476	0						Gravity Compensation Torque	Immediately
Pn480	10000						Speed Limit during Force Control	Immediately
Pn481	400						Polarity Detection Speed Loop Gain	Immediately
Pn482	3000						Polarity Detection Speed Loop Integral Time Constant	Immediately
Pn483	30						Forward Force Limit	Immediately
Pn484	30						Reverse Force Limit	Immediately
Pn485	20						Polarity Detection Reference Speed	Immediately
Pn486	25						Polarity Detection Reference Acceleration/Deceleration Time	Immediately
Pn487	0						Polarity Detection Constant Speed Time	Immediately
Pn488	100						Polarity Detection Reference Waiting Time	Immediately
Pn48E	10						Polarity Detection Range	Immediately
Pn490	100						Polarity Detection Load Level	Immediately
Pn495	100						Polarity Detection Confirmation Force Reference	Immediately
Pn498	10						Polarity Detection Allowable Error Range	Immediately
Pn49F	0						Speed Ripple Compensation Enable Speed	Immediately
Pn502	20						Rotation Detection Level	Immediately
Pn503	10						Speed Coincidence Detection Signal Output Width	Immediately
Pn506	0						Brake Reference-Servo OFF Delay Time	Immediately
Pn507	100						Brake Reference Output Speed Level	Immediately
Pn508	50						Servo OFF-Brake Command Waiting Time	Immediately

Continued on next page.

Continued from previous page.

Parameter No.	Default Setting						Name	When Enabled
Pn509	20						Momentary Power Interruption Hold Time	Immediately
Pn50A	1881h						Input Signal Selections 1	After restart
Pn50B	8882h						Input Signal Selections 2	After restart
Pn50E	0000h						Output Signal Selections 1	After restart
Pn50F	0100h						Output Signal Selections 2	After restart
Pn510	0000h						Output Signal Selections 3	After restart
Pn511	6543h						Input Signal Selections 5	After restart
Pn512	0000h						Output Signal Inverse Settings	After restart
Pn514	0000h						Output Signal Selections 4	After restart
Pn516	8888h						Input Signal Selections 7	After restart
Pn51B	1000						Motor-Load Position Deviation Overflow Detection Level	Immediately
Pn51E	100						Position Deviation Overflow Warning Level	Immediately
Pn520	5242880						Position Deviation Overflow Alarm Level	Immediately
Pn522	7						Positioning Completed Width	Immediately
Pn524	1073741824						Near Signal Width	Immediately
Pn526	5242880						Position Deviation Overflow Alarm Level at Servo ON	Immediately
Pn528	100						Position Deviation Overflow Warning Level at Servo ON	Immediately
Pn529	10000						Speed Limit Level at Servo ON	Immediately
Pn52A	20						Multiplier per Fully-closed Rotation	Immediately
Pn52B	20						Overload Warning Level	Immediately
Pn52C	100						Base Current Derating at Motor Overload Detection	After restart
Pn530	0000h						Program Jogging-Related Selections	Immediately
Pn531	32768						Program Jogging Travel Distance	Immediately
Pn533	500						Program Jogging Movement Speed	Immediately
Pn534	100						Program Jogging Acceleration/Deceleration Time	Immediately
Pn535	100						Program Jogging Waiting Time	Immediately
Pn536	1						Program Jogging Number of Movements	Immediately
Pn550	0						Analog Monitor 1 Offset Voltage	Immediately
Pn551	0						Analog Monitor 2 Offset Voltage	Immediately
Pn552	100						Analog Monitor 1 Magnification	Immediately

Continued on next page.

Continued from previous page.

Parameter No.	Default Setting						Name	When Enabled
Pn553	100						Analog Monitor 2 Magnification	Immediately
Pn55A	1						Power Consumption Monitor Unit Time	Immediately
Pn560	400						Residual Vibration Detection Width	Immediately
Pn561	100						Overshoot Detection Level	Immediately
Pn56A	0000h						Output Signal Reference Method Selections 1	After restart
Pn56B	0000h						Reserved parameter	After restart
Pn581	20						Zero Speed Level	Immediately
Pn582	10						Speed Coincidence Detection Signal Output Width	Immediately
Pn583	10						Brake Reference Output Speed Level	Immediately
Pn584	10000						Speed Limit Level at Servo ON	Immediately
Pn585	50						Program Jogging Movement Speed	Immediately
Pn586	0						Motor Running Cooling Ratio	Immediately
Pn587	0000h						Polarity Detection Execution Selection for Absolute Linear Encoder	Immediately
Pn600	0						Regenerative Resistor Capacity	Immediately
Pn601	0						Dynamic Brake Resistor Allowable Energy Consumption	After restart
Pn603	0						Regenerative Resistance	Immediately
Pn604	0						Dynamic Brake Resistance	After restart
Pn61A	0000h						Overheat Protection Selections	After restart
Pn61B	250						Overheat Alarm Level	Immediately
Pn61C	100						Overheat Warning Level	Immediately
Pn61D	0						Overheat Alarm Filter Time	Immediately
Pn800	1040h						Communications Controls	Immediately
Pn801	0003h						Application Function Selections 6 (Software Limits)	Immediately
Pn803	10						Origin Range	Immediately
Pn804	1073741823						Forward Software Limit	Immediately
Pn806	-1073741823						Reverse Software Limit	Immediately
Pn808	0						Absolute Encoder Origin Offset	Immediately*2
Pn80A	100						First Stage Linear Acceleration Constant	Immediately*3
Pn80B	100						Second Stage Linear Acceleration Constant	Immediately*3
Pn80C	0						Acceleration Constant Switching Speed	Immediately*3
Pn80D	100						First Stage Linear Deceleration Constant	Immediately*3

Continued on next page.

Continued from previous page.

Parameter No.	Default Setting						Name	When Enabled
Pn80E	100						Second Stage Linear Deceleration Constant	Immediately*3
Pn80F	0						Deceleration Constant Switching Speed	Immediately*3
Pn810	0						Exponential Acceleration/ Deceleration Bias	Immediately*3
Pn811	0						Exponential Acceleration/ Deceleration Time Constant	Immediately*3
Pn812	0						Movement Average Time	Immediately*3
Pn814	100						External Positioning Final Travel Distance	Immediately*3
Pn816	0000h						Origin Return Mode Settings	Immediately*3
Pn817	50						Origin Approach Speed 1	Immediately*3
Pn818	5						Origin Approach Speed 2	Immediately*3
Pn819	100						Final Travel Distance for Origin Return	Immediately*3
Pn81E	0000h						Input Signal Monitor Selections	Immediately
Pn81F	0010h						Command Data Allocations	After restart
Pn820	0						Forward Latching Area	Immediately
Pn822	0						Reverse Latching Area	Immediately
Pn824	0000h						Option Monitor 1 Selection	Immediately
Pn825	0000h						Option Monitor 2 Selection	Immediately
Pn827	100						Linear Deceleration Constant 1 for Stopping	Immediately*3
Pn829	0						SVOFF Waiting Time (for SVOFF at Deceleration to Stop)	Immediately
Pn82A	1813h						Option Field Allocations 1	After restart
Pn82B	1D1Ch						Option Field Allocations 2	After restart
Pn82C	1F1Eh						Option Field Allocations 3	After restart
Pn82D	0000h						Option Field Allocations 4	After restart
Pn82E	0000h						Option Field Allocations 5	After restart
Pn833	0000h						Motion Settings	After restart
Pn834	100						First Stage Linear Acceleration Constant 2	Immediately*3
Pn836	100						Second Stage Linear Acceleration Constant 2	Immediately*3
Pn838	0						Acceleration Constant Switching Speed 2	Immediately*3
Pn83A	100						First Stage Linear Deceleration Constant 2	Immediately*3
Pn83C	100						Second Stage Linear Deceleration Constant 2	Immediately*3
Pn83E	0						Deceleration Constant Switching Speed 2	Immediately*3
Pn840	100						Linear Deceleration Constant 2 for Stopping	Immediately*3

Continued on next page.

Continued from previous page.

Parameter No.	Default Setting						Name	When Enabled
Pn842	0						Second Origin Approach Speed 1	Immediately*3
Pn844	0						Second Origin Approach Speed 2	Immediately*3
Pn846	0						POSING Command Scurve Acceleration/Deceleration Rate	Immediately*3
Pn850	0						Number of Latch Sequences	Immediately
Pn851	0						Continuous Latch Sequence Count	Immediately
Pn852	0000h						Latch Sequence 1 to 4 Settings	Immediately
Pn853	0000h						Latch Sequence 5 to 8 Settings	Immediately
Pn860	0000h						SVCMD_IO Input Signal Monitor Allocations 1	Immediately
Pn861	0000h						SVCMD_IO Input Signal Monitor Allocations 2	Immediately
Pn862	0000h						SVCMD_IO Input Signal Monitor Allocations 3	Immediately
Pn863	0000h						SVCMD_IO Input Signal Monitor Allocations 4	Immediately
Pn868	0000h						SVCMD_IO Output Signal Monitor Allocations 1	Immediately
Pn869	0000h						SVCMD_IO Output Signal Monitor Allocations 2	Immediately
Pn880	–						Station Address Monitor (for maintenance, read only)	–
Pn881	–						Set Transmission Byte Count Monitor [bytes] (for maintenance, read only)	–
Pn882	–						Transmission Cycle Setting Monitor [× 0.25 μs] (for maintenance, read only)	–
Pn883	–						Communications Cycle Setting Monitor [transmission cycles] (for maintenance, read only)	–
Pn884	0000h						Communications Controls 2	Immediately
Pn88A	0						MECHATROLINK Receive Error Counter Monitor (for maintenance, read only)	–
Pn890 to Pn8A6	0h						Command Data Monitor during Alarm/Warning (for maintenance, read only)	–
Pn8A8 to Pn8BE	0h						Response Data Monitor during Alarm/Warning (for maintenance, read only)	–
Pn900	0						Number of Parameter Banks	After restart
Pn901	0						Number of Parameter Bank Members	After restart
Pn902 to Pn910	0000h						Parameter Bank Member Definition	After restart

Continued on next page.

Continued from previous page.

Parameter No.	Default Setting						Name	When Enabled
Pn920 to Pn95F	0000h						Parameter Bank Data (Not saved in nonvolatile memory.)	Immediately
01 PnA02	–						Encoder Type Selection (read only)	–
02 PnA04	–						Motor Type Selection (read only)	–
03 PnA06	–						Semi-closed/Fully-closed Selection (read only)	–
04 PnA08	–						Rated Motor Speed (read only)	–
05 PnA0A	–						Maximum Output Speed (read only)	–
06 PnA0C	–						Speed Multiplier (read only)	–
07 PnA0E	–						Rated Torque (read only)	–
08 PnA10	–						Maximum Output Torque (read only)	–
09 PnA12	–						Torque Multiplier (read only)	–
0A PnA14	–						Resolution (read only)	–
0B PnA16	0						Scale Pitch	After restart
0C PnA18	–						Pulses per Scale Pitch (read only)	–
21 PnA42	16						Electronic Gear Ratio (Numerator)	After restart
22 PnA44	1						Electronic Gear Ratio (Denominator)	After restart
23 PnA46	0						Absolute Encoder Origin Offset	Immediately*2
24 PnA48	65535						Multiturn Limit Setting	After restart
25 PnA4A	0000h						Limit Setting	After restart
26 PnA4C	1073741823						Forward Software Limit	Immediately
27 PnA4E	0						Reserved parameter (Do not change.)	Immediately
28 PnA50	-1073741823						Reverse Software Limit	Immediately
29 PnA52	0						Reserved parameter (Do not change.)	Immediately
41 PnA82	0h						Speed Unit Selection	After restart
42 PnA84	0						Speed Base Unit Selection	After restart
43 PnA86	0h						Position Unit Selection	After restart
44 PnA88	0						Position Base Unit Selection	After restart

Continued on next page.

Continued from previous page.

Parameter No.	Default Setting						Name	When Enabled
45 PnA8A	0h						Acceleration Unit Selection	After restart
46 PnA8C	4						Acceleration Base Unit Selection	After restart
47 PnA8E	1h						Torque Unit Selection	After restart
48 PnA90	0						Torque Base Unit Selection	After restart
49 PnA92	0601011 Fh						Supported Unit Systems (read only)	–
61 PnAC2	40000						Speed Loop Gain	Immediately
62 PnAC4	20000						Speed Loop Integral Time Constant	Immediately
63 PnAC6	40000						Position Loop Gain	Immediately
64 PnAC8	0						Feedforward Compensation	Immediately
65 PnACA	0						Position Loop Integral Time Constant	Immediately
66 PnACC	7						Positioning Completed Width	Immediately
67 PnACE	1073741 824						Near Signal Width	Immediately
81 PnB02	0						Exponential Acceleration/ Deceleration Time Constant	Immedi-ately*3
82 PnB04	0						Movement Average Time	Immedi-ately*3
83 PnB06	100						External Positioning Final Travel Distance	Immediately
84 PnB08	×5,000h refer-ence units/s con-verted to 10^{-3} min^{-}						Origin Approach Speed	Immediately
85 PnB0A	× 500h refer-ence units/s con-verted to 10^{-3} min^{-}						Origin Return Creep Speed‘	Immediately
86 PnB0C	100						Final Travel Distance for Origin Return	Immediately
87 PnB0E	1h						Fixed Monitor Selection 1	Immediately
88 PnB10	0h						Fixed Monitor Selection 2	Immediately
89 PnB12	0h						SEL_MON (CMN1) Monitor Selection 1	Immediately
8A PnB14	0h						SEL_MON (CMN2) Monitor Selection 2	Immediately

Continued on next page.

Continued from previous page.

Parameter No.	Default Setting						Name	When Enabled
8B PnB16	10						Origin Detection Width	Immediately
8C PnB18	100						Forward Torque Limit	Immediately
8D PnB1A	100						Reverse Torque Limit	Immediately
8E PnB1C	20000						Zero Speed Detection Range	Immediately
8F PnB1E	10000						Speed Coincidence Signal Detection Width	Immediately
90 PnB20	0FFF3F3Fh						Servo Command Control Field Enable/Disable Selections (read only)	–
91 PnB22	0FFF3F33h						Servo Status Field Enable/Disable Selections (read only)	–
92 PnB24	007F01F0h						Output Bit Enable/Disable Selections (read only)	–
93 PnB26	FF0FFEFEh						Input Bit Enable/Disable Selections (read only)	–

*1. The enable timing depends on the digit that is changed. Refer to the following section for details.
☞ *13.1 List of Servo Parameters* on page 13-2

*2. The parameter setting is enabled after SENS_ON command execution is completed.

*3. Change the setting when the reference is stopped (i.e., while DEN is set to 1). If you change the setting during operation, the reference output will be affected.

Appendices

14

The appendix provides information on interpreting panel displays, and tables of corresponding SERVOPACK and SigmaWin+ function names.

14.1 Interpreting Panel Displays 14-2

14.1.1 Interpreting Status Displays 14-2
14.1.2 Alarm and Warning Displays 14-2
14.1.3 Hard Wire Base Block Active Display 14-2
14.1.4 Overtravel Display 14-2
14.1.5 Forced Stop Display 14-2

14.2 Corresponding SERVOPACK and SigmaWin+ Function Names . . 14-3

14.2.1 Corresponding SERVOPACK Utility Function Names 14-3
14.2.2 Corresponding SERVOPACK Monitor Display Function Names 14-5

14.1 Interpreting Panel Displays

You can check the Servo Drive status on the panel display of the SERVOPACK.
Also, if an alarm or warning occurs, the alarm or warning number will be displayed.

14.1.1 Interpreting Status Displays

The status is displayed as described below.

Display	Meaning
8	/TGON (Rotation Detection) Signal Display Lit if the Servomotor speed is higher than the setting of Pn502 or Pn581 and not lit if the speed is lower than the setting. (The default setting is 20 min^{-1} or 20 mm/s.)
0	Base Block Display Lit during the base block state (servo OFF). Not lit while the servo is ON.

Display	Meaning
8	Reference Input Display Lit while a reference is being input.
8.	Control Power Supply ON Display Lit while the control power is being supplied.

14.1.2 Alarm and Warning Displays

If there is an alarm or warning, the display will change in the following order.

Example: Alarm A.E60

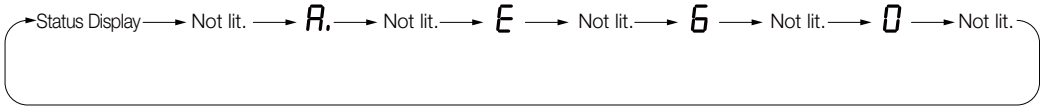

14.1.3 Hard Wire Base Block Active Display

If a hard wire base block (HWBB) is active, the display will change in the following order.

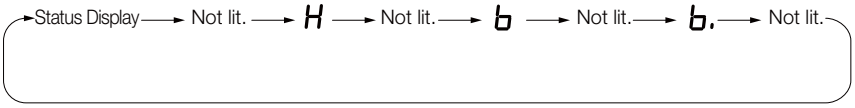

14.1.4 Overtravel Display

If overtravel has occurred, the display will change in the following order.

① Forward Overtravel (P-OT)

② Reverse Overtravel (N-OT)

③ Forward and Reverse Overtravel

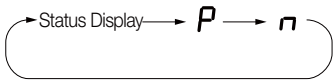

14.1.5 Forced Stop Display

During a forced stop, the following display will appear.

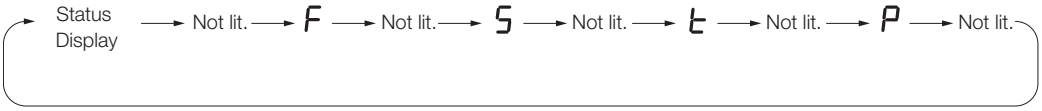

14.2 Corresponding SERVOPACK and SigmaWin+ Function Names

This section gives the names and numbers of the utility functions and monitor display functions used by the SERVOPACKs and the names used by the SigmaWin+.

14.2.1 Corresponding SERVOPACK Utility Function Names

SigmaWin+		SERVOPACK	
Button in Menu Dialog Box	Function Name	Fn No.	Function Name
Basic Functions	Initialize	Fn005	Initializing Parameters
	Software Reset	Fn030	Software Reset
	Setup Wizard	–	–
	I/O Signal Allocation	–	–
	Product Information	Fn011	Display Servomotor Model
		Fn012	Display Software Version
		Fn01E	Display SERVOPACK and Servomotor IDs
		Fn01F	Display Servomotor ID from Feedback Option Module
Encoder Setting	Reset Absolute Encoder	Fn008	Reset Absolute Encoder
	Multi-turn Limit Setup	Fn013	Multiturn Limit Setting after Multiturn Limit Disagreement Alarm
	Search Origin	Fn003	Origin Search
	Zero Point Position Setting	Fn020	Set Absolute Linear Encoder Origin
	Polarity Detection	Fn080	Polarity Detection
	Motor Parameter Scale Write	–	–
Troubleshooting	Display Alarm	Fn000	Display Alarm History
		Fn006	Clear Alarm History
		Fn014	Reset Option Module Configuration Error
	Alarm Trace	–	–
	Reset Motor Type Alarm	Fn021	Reset Motor Type Alarm
Operation	Jog	Fn002	Jog
	Program JOG Operation	Fn004	Jog Program
Monitor	Trace	–	–
	Real Time Trace	–	–
	Monitor	–	–
	Life Monitor	–	–

Continued on next page.

Continued from previous page.

SigmaWin+		SERVOPACK	
Button in Menu Dialog Box	Function Name	Fn No.	Function Name
Tuning	Tuning - Autotuning without Host Reference	Fn201	Advanced Autotuning without Reference
	Tuning - Autotuning with Host Reference	Fn202	Advanced Autotuning with Reference
	Tuning - Custom Tuning	Fn203	One-Parameter Tuning
	Tuning - Custom Tuning - Adjust Anti-resonance Control	Fn204	Adjust Anti-resonance Control
	Tuning - Custom Tuning - Vibration Suppression	Fn205	Vibration Suppression
	System Tuning	–	–
	Response Level Setting	Fn200	Tuning-less Level Setting
	Edit Online Parameters	–	–
Diagnostic	Mechanical Analysis	–	–
	Easy FFT	Fn206	Easy FFT
	Ripple Compensation	–	–
	Online Vibration Monitor	–	–
Others	Adjust the Analog Monitor Output	Fn00C	Adjust Analog Monitor Output Offset
		Fn00D	Adjust Analog Monitor Output Gain
	Adjust the Motor Current Detection Offsets	Fn00E	Autotune Motor Current Detection Signal Offset
		Fn00F	Manually Adjust Motor Current Detection Signal Offset
	Initialize Vibration Detection Level	Fn01B	Initialize Vibration Detection Level
	Parameter Converter	–	–
	SERVOPACK Axis Name Setting	–	–
	Write Prohibited Setting	Fn010	Write Prohibition Setting
	Motor Parameter SERVOPACK Write	–	–

14.2.2 Corresponding SERVOPACK Monitor Display Function Names

SigmaWin+		SERVOPACK	
Button in Menu Dialog Box	Name [Unit]	Un No.	Name [Unit]
Motion Monitor	Motor Speed [min^{-1}]	Un000	Motor Speed [min^{-1}]
	Speed Reference [min^{-1}]	Un001	Speed Reference [min^{-1}]
	Torque Reference [%]	Un002	Torque Reference [%] (percentage of rated torque)
	• Rotary Servomotors: Rotational Angle 1 [encoder pulses] (number of encoder pulses from origin within one encoder rotation) • Linear Servomotors: Electrical Angle 1 [linear encoder pulses] (linear encoder pulses from the polarity origin)	Un003	• Rotary Servomotors: Rotational Angle 1 [encoder pulses] (number of encoder pulses from origin within one encoder rotation displayed in decimal) • Linear Servomotors: Electrical Angle 1 [linear encoder pulses] (linear encoder pulses from the polarity origin displayed in decimal)
	• Rotary Servomotors: Rotational Angle 2 [deg] (electrical angle from origin within one encoder rotation) • Linear Servomotors: Electrical Angle 2 [deg] (electrical angle from polarity origin)	Un004	• Rotary Servomotors: Rotational Angle 2 [deg] (electrical angle from polarity origin) • Linear Servomotors: Electrical Angle 2 [deg] (electrical angle from polarity origin)
	Input Reference Pulse Speed [min^{-1}]	Un007	Input Reference Pulse Speed [min^{-1}] (displayed only during position control)
	Position Deviation [reference units]	Un008	Position Error Amount [reference units] (displayed only during position control)
	Accumulated Load Ratio [%]	Un009	Accumulated Load Ratio [%] (percentage of rated torque: effective torque in cycles of 10 seconds)
	Regenerative Load Ratio [%]	Un00A	Regenerative Load Ratio [%] (percentage of processable regenerative power: regenerative power consumption in cycles of 10 seconds)
	Dynamic Brake Resistor Power Consumption [%]	Un00B	Power Consumed by DB Resistance [%] (percentage of processable power at DB activation: displayed in cycles of 10 seconds)
	Input Reference Pulse Counter [reference units]	Un00C	Input Reference Pulse Counter [reference units]
	Feedback Pulse Counter [encoder pulses]	Un00D	Feedback Pulse Counter [encoder pulses]

Continued on next page.

Continued from previous page.

SigmaWin+		SERVOPACK	
Button in Menu Dialog Box	Name [Unit]	Un No.	Name [Unit]
Motion Monitor	Fully-closed Loop Feedback Pulse Counter [external encoder resolution]	Un00E	Fully-closed Loop Feedback Pulse Counter [external encoder resolution]
	Upper Limit Setting of Motor Maximum Speed/Upper Limit Setting of Encoder Output Resolution	Un010*1	Upper Limit Setting of Motor Maximum Speed/ Upper Limit Setting of Encoder Output Resolution
	Total Operation Time [100 ms]	Un012	Total Operation Time [100 ms]
	Feedback Pulse Counter [reference units]	Un013	Feedback Pulse Counter [reference units]
	Overheat Protection Input [0.01 V]	Un02F	Overheat Protection Input [0.01 V]
	Current Backlash Compensation Value [0.1 reference units]	Un030	Current Backlash Compensation Value [0.1 reference units]
	Backlash Compensation Value Setting Limit [0.1 reference units]	Un031	Backlash Compensation Value Setting Limit [0.1 reference units]
	Power Consumption [W]	Un032	Power Consumption [W]
	Consumed Power [0.001 Wh]	Un033	Consumed Power [0.001 Wh]
	Cumulative Power Consumption [Wh]	Un034	Cumulative Power Consumption [Wh]
	Absolute Encoder Multiturn Data	Un040	Absolute Encoder Multiturn Data
	Position within One Rotation of Absolute Encoder [encoder pulses]	Un041	Position within One Rotation of Absolute Encoder [encoder pulses]
	Lower Bits of Absolute Encoder Position [encoder pulses]	Un042	Lower Bits of Absolute Encoder Position [encoder pulses]
	Upper Bits of Absolute Encoder Position [encoder pulses]	Un043	Upper Bits of Absolute Encoder Position [encoder pulses]
	Maximum Value of Amplitude of Estimated Vibration [min^{-1}]*2	Un078	Maximum Value of Amplitude of Estimated Vibration [min^{-1}]
	Estimated External Disturbance Torque [%]*2	Un079	Estimated External Disturbance Torque [%]
	Maximum Value of Estimated External Disturbance Torque*2	Un07A	Maximum Value of Estimated External Disturbance Torque Torque [%]
	Minimum Value of Estimated External Disturbance Torque*2	Un07B	Minimum Value of Estimated External Disturbance Torque Torque [%]
	Number of Serial Encoder Communications Errors*2 [times]	Un104	Number of Serial Encoder Communications Errors [times]
	Settling Time [0.1 ms]*2	Un105	Settling Time [0.1 ms]
	Amount of Overshoot [reference units]*2	Un106	Amount of Overshoot [reference units]
	Residual Vibration Frequency [0.1 Hz]*2	Un107	Residual Vibration Frequency [0.1 Hz]
	Estimated Vibration*2 [min^{-1}]	Un10C	Estimated Vibration [min^{-1}]
	Maximum Value of Accumulated Load Ratio [%]*2	Un145	Maximum Value of Accumulated Load Ratio [%]
	Number of MECHATROLINK Communications Errors [times]*2	Un147	Number of MECHATROLINK Communications Errors [times]
	Margin Until Overload [0.01%]*2	Un14E	Margin Until Overload [0.01%]
	Temperature Margin Until Servomotor Overheats [°C]*2	Un174	Temperature Margin Until Servomotor Overheats [°C]

Continued on next page.

Continued from previous page.

SigmaWin+		SERVOPACK	
Button in Menu Dialog Box	Name [Unit]	Un No.	Name [Unit]
Status Monitor	Polarity Sensor Signal Monitor	Un011	Polarity Sensor Signal Monitor
	Active Gain Monitor	Un014	Effective Gain Monitor (gain settings 1 = 1, gain settings 2 = 2)
	Safety I/O Signal Monitor	Un015	Safety I/O Signal Monitor
Input Signal Monitor	Input Signal Monitor	Un005	Input Signal Monitor
Output Signal Monitor	Output Signal Monitor	Un006	Output Signal Monitor
Service Life Monitor	Installation Environment Monitor – SERVOPACK	Un025	SERVOPACK Installation Environment Monitor [%]
	Installation Environment Monitor – Servomotor*3	Un026*3	Servomotor Installation Environment Monitor [%]
	Service Life Prediction Monitor – Built-in Fan	Un027	Built-in Fan Remaining Life Ratio [%]
	Service Life Prediction Monitor – Capacitor	Un028	Capacitor Remaining Life Ratio [%]
	Service Life Prediction Monitor – Surge Prevention Circuit	Un029	Surge Prevention Circuit Remaining Life Ratio [%]
	Service Life Prediction Monitor – Dynamic Brake Circuit	Un02A	Dynamic Brake Circuit Remaining Life Ratio [%]
Product Information	Motor – Resolution	Un084	Linear Encoder Pitch (Scale pitch = Un084 × 10^{Un085} [pm])
		Un085	Linear Encoder Pitch Exponent (Scale pitch = Un084 × 10^{Un085} [pm])
–	–	Un020	Rated Motor Speed [min^{-1}]
	–	Un021	Maximum Motor Speed [min^{-1}]

*1. You can use Un010 to monitor the upper limit setting for the maximum motor speed or the upper limit setting for the encoder output resolution.
You can monitor the upper limit of the encoder output resolution setting (Pn281) for the current maximum motor speed setting (Pn385), or you can monitor the upper limit of the maximum motor speed setting for the current encoder output resolution setting.
Select which signal to monitor with Pn080 = n.X□□□ (Calculation Method for Maximum Speed or Divided Output Pulses).
- If Pn080 = n.0□□□, the encoder output resolution (Pn281) that can be set is displayed.
- If Pn080 = n.1□□□, the maximum motor speed (Pn385) that can be set is displayed in mm/s.

*2. These items can be monitored using SERVOPACKs with software version 002C or higher.

*3. This applies to the following motors. The display will show 0 for all other models.
SGM7M, SGM7J, SGM7A, SGM7P, SGM7G, SGM7E, SGM7F, and SGMCV

Index

Symbols

/BK - 5-35
/BK (Brake) signal- 5-35
/CLT (Torque Limit Detection) signal - - - - - - - - - - - 6-32
/COIN - 6-12
/COIN (Positioning Completion) signal - - - - - - - - - - 6-12
/HWBB1 - 4-42
/HWBB2 - 4-42
/N-CL - 6-29
/N-CL (Reverse External Torque Limit) signal - - - - - - 6-29
/NEAR - 6-13
/NEAR (Near) signal - 6-13
/P-CL- 6-29
/P-CL (Forward External Torque Limit) signal - - - - - - 6-29
/S-RDY- 6-10
/TGON - 6-9
/TGON (Rotation Detection) signal - - - - - - - - - - - - - 6-9
/V-CMP - 6-11
/V-CMP (Speed Coincidence Detection) signal - - - - - 6-11
/VLT - 6-14
/VLT (Speed Limit Detection) signal- - - - - - - - - - - - 6-14
/WARN- 6-8
/WARN (Warning) signal - - - - - - - - - - - - - - - - - - - 6-8

A

A.CC0 - 6-40
absolute encoder - 6-33
origin offset - 5-53
resetting - 5-50
wiring - 4-26
AC power supply input
setting - 5-14
AC Reactor
wiring - 4-24
additional adjustment functions - - - - - - - - - - - - - - 8-66
alarm reset possibility - - - - - - - - - - - - - - - - - - - 12-5
alarm tracing - 9-18
ALM - 6-8
ALM (Servo Alarm) signal - - - - - - - - - - - - - - - - - - 6-8
Analog Monitor Connector- - - - - - - - - - - - - - - - - 4-45
analog monitor factors - - - - - - - - - - - - - - - - - - - 9-11
anti-resonance control - - - - - - - - - - - - - - - - - - - 8-51
automatic detection of connected motor - - - - - - - - 5-16
automatic gain switching- - - - - - - - - - - - - - - - - - 8-67
automatic notch filters - - - - - - - - - - - - - - - - - - - 8-32
autotuning with a host reference - - - - - - - - - - - - - 8-35
autotuning without a host reference - - - - - - - - - - - 8-24

B

backlash compensation - - - - - - - - - - - - - - - - - - - 8-75
base block (BB) - x
battery
replacement - 12-3
block diagram - 2-9
brake operation delay time - - - - - - - - - - - - - - - - 5-34
brake release delay time- - - - - - - - - - - - - - - - - - 5-34

C

CCW- 5-17
clearing alarm history - - - - - - - - - - - - - - - - - - 12-44
CN1 - 4-34
CN2 - 4-25
CN5 - 4-45
CN502- 4-44
CN6A - 4-43
CN6B - 4-43
CN7 - 4-44
CN8 - 4-41
coasting - 5-39
coasting to a stop - 5-39
coefficient of speed fluctuation - - - - - - - - - - - - - - - 2-8
compatible adjustment functions - - - - - - - - - - - - - - 8-91
Computer Connector - 4-44
connecting a safety function device - - - - - - - - - - - 11-13
countermeasures against noise- - - - - - - - - - - - - - - - 4-5
current control mode selection - - - - - - - - - - - - - - - 8-73
current gain level setting- - - - - - - - - - - - - - - - - - 8-74
custom tuning - 8-42
CW- 5-17

D

DC power supply input - - - - - - - - - - - - - - - - - - - 4-12
setting - 5-14
DC Reactor
terminals - 4-11, 4-12
wiring - 4-24
decelerating to a stop - - - - - - - - - - - - - - - - - - - 5-39
detection timing for Overload Alarms (A.720) - - - - - - - 5-43
detection timing for Overload Warnings (A.910) - - - - - 5-42
diagnostic output circuits - - - - - - - - - - - - - - - - - 4-42
diagnostic tools - 8-95
displaying alarm history - - - - - - - - - - - - - - - - - - 12-43
dynamic brake applied - - - - - - - - - - - - - - - - - - - 5-39
dynamic brake stopping - - - - - - - - - - - - - - - - - - - 5-39

E

EasyFFT - 8-97
EDM1 - 11-9
EDM1 (External Device Monitor) signal - - - - - - - - - - 11-9
electronic gear - 5-44

encoder divided pulse output - - - - - - - - - - - - 6-20, 10-7
setting - 6-25
signals - 6-20
encoder resolution - - - - - - - - - - - - - - - - - - 5-46, 6-25
estimating the moment of inertia - - - - - - - - - - - - - - 8-16
External Regenerative Resistor - - - - - - - - - - - - - - - 5-56
external torque limits - 6-29

F

feedback pulse counter - - - - - - - - - - - - - - - - - - - 5-24
feedforward - 8-33, 8-91
feedforward compensation - - - - - - - - - - - - - - - - - 8-91
FG - 4-35
forward direction - 10-6
forward rotation - 5-17
friction compensation - - - - - - - - - - - - - - - - 8-33, 8-70
fully-closed system - 10-2

G

gain switching - 8-66
gravity compensation - 8-72
grounding - 4-8
group 1 alarms - 5-40
group 2 alarms - 5-40
G-SEL - 8-67

H

hard wire base block (HWBB) - - - - - - - - - - - - - - - - 11-3
HWBB input signal specifications - - - - - - - - - - - 11-6
hard wire base block (HWBB) state - - - - - - - - - - - - 11-4
detecting errors in HWBB signal - - - - - - - - - - - - 11-6
resetting - 11-5
holding brake - 5-34
HWBB - 11-3, 11-4
detecting errors in HWBB signal - - - - - - - - - - - - 11-6
HWBB input signal specifications - - - - - - - - - - - 11-6
HWBB state
resetting - 11-5

I

I/O signals
allocations - 6-4
functions - 4-34
monitoring - 9-3, 9-5
names - 4-34
wiring example - 4-37
initializing the vibration detection level - - - - - - - - - - 6-51
input signals
allocations - 6-4
internal torque limits - 6-28
I-P control - 8-88

J

jogging - 7-7

L

limiting torque - 6-28
Linear Encoder
wiring example - 4-26
linear encoder
feedback resolution - - - - - - - - - - - - - - - - - - - 5-47
scale pitch setting - 5-18
Linear Servomotor - x
line-driver output circuits - - - - - - - - - - - - - - - - - - 4-40
list of alarms - 12-5
list of MECHATROLINK-III common parameters - - - - 13-43
list of parameters - 13-2
MECHATROLINK-III common parameters - - - - - 13-43
list of warnings - 12-49

M

Main Circuit Cable - x
manual gain switching - - - - - - - - - - - - - - - - - - - 8-67
manual tuning - 8-81
mechanical analysis - 8-95
mode switching (changing between proportional
and PI control) - 8-92
Momentary Power Interruption Hold Time - - - - - - - - 6-16
monitor factors - 9-11
Motion Monitor - 9-3
motor current detection signal
automatic adjustment - - - - - - - - - - - - - - - - - - 6-55
manual adjustment - - - - - - - - - - - - - - - - - - - 6-57
offset - 6-55
motor direction setting - - - - - - - - - - - - - - - - - - - 5-17
motor maximum speed - - - - - - - - - - - - - - - - - - - 6-19
motor overload detection level - - - - - - - - - - - - - - - 5-42
multiturn limit - 6-39
Multiturn Limit Disagreement - - - - - - - - - - - - - - - - 6-40

N

Noise Filter - 4-6
Noise Filter connection precautions - - - - - - - - - - - - - 4-7
N-OT - 5-29, 5-30
N-OT (Reverse Drive Prohibit) signal - - - - - - - - - - - - 5-30
notch filters - 8-84, 8-87

O

operation for momentary power interruptions - - - - - - 6-16
origin search - 7-19
output phase form - 6-21
overheat protection - 6-62
Overheat Protection Input - - - - - - - - - - - - - - - - - - 4-34
overload warnings - 5-42
overtravel - 5-29
warnings - 5-32

P

PAO - 6-20, 10-7
parameter settings recording table - - - - - - - - - - - - -13-52
parameters
classification - 5-4
initializing parameter settings - - - - - - - - - - - - - 5-11
notation (numeric settings) - - - - - - - - - - - - - xi, 5-5
notation (selecting functions) - - - - - - - - - - - - xi, 5-5
setting methods - 5-6
write prohibition setting - - - - - - - - - - - - - - - - - 5-8
PBO - 6-20, 10-7
PCO - 6-20, 10-7
photocoupler input circuits - - - - - - - - - - - - - - - - 4-39
photocoupler output circuits- - - - - - - - - - - - - - - - 4-40
PI control - 8-88
polarity detection - 5-26
polarity sensor - 5-25
position integral - 8-94
position loop gain- 8-82
positioning completed width- - - - - - - - - - - - - - - - 6-12
P-OT - 5-29, 5-30
P-OT (Forward Drive Prohibit) signal - - - - - - - - - - - 5-30
program jogging - 7-14
operation pattern - 7-14

R

Reactor
terminals of DC Reactor - - - - - - - - - - - - - - - - 4-11
wiring of AC Reactor - - - - - - - - - - - - - - - - - - 4-24
wiring of DC Reactor - - - - - - - - - - - - - - - - - - 4-24
reference unit - 5-44
Regenerative Resistor
connection - 4-22
regenerative resistor - - - - - - - - - - - - - - - - - - - 5-56
regenerative resistor capacity - - - - - - - - - - - - - - 5-56
resetting alarms -12-42
resetting alarms detected in Option Modules - - - - - -12-45
reverse direction - 10-6
risk assessment- 11-3
Rotary Servomotor - x

S

Safety Function Signals - - - - - - - - - - - - - - - - - - 4-41
safety functions - 11-2
application examples- - - - - - - - - - - - - - - - - -11-10
monitoring - 9-5
precautions - 11-2
verification test -11-12
safety input circuits - - - - - - - - - - - - - - - - - - - 4-41
scale pitch - 5-18
selecting the phase sequence for a Linear Servomotor 5-23
selecting torque limits - - - - - - - - - - - - - - - - - - 6-28
SEMI F47 function - 6-17
Serial Communications Connector - - - - - - - - - - - - -4-44
Serial Converter Unit -5-18
Servo Drive - x
servo gains -8-81
servo lock - x
servo OFF - x
servo ON - x
Servo System - x
Servomotor - x
Servomotor stopping method for alarms - - - - - - - - -5-40
SERVOPACK - x
inspections and part replacement - - - - - - - - - - -12-2
part names -1-4
ratings- -2-2
specifications- -2-6
setting the origin -5-53
setting the position deviation overflow alarm level - - - - -8-8
setting the position deviation overflow alarm level
at servo ON -8-10
setting the vibration detection level - - - - - - - - - - - -8-10
setup parameters -5-4
SG -4-35
SigmaWin+ - x
signal allocations -6-4
single-phase AC power supply input
setting- -5-15
single-phase, 200-VAC power supply input
wiring example -4-17
sink circuits -4-39
software limits -6-27
software reset -6-48
source circuits -4-39
speed detection method selection - - - - - - - - - - - - - -8-74
speed limit during torque control - - - - - - - - - - - - - -6-14
speed loop gain -8-83
speed loop integral time constant - - - - - - - - - - - - - -8-83
Spring Opener -4-13
Status Monitor -9-3
stopping by applying the dynamic brake - - - - - - - - - -5-39
stopping method for servo OFF - - - - - - - - - - - - - - -5-40
storage humidity -2-6
storage temperature -2-6
surrounding air humidity - - - - - - - - - - - - - - - - - - -2-6
surrounding air temperature - - - - - - - - - - - - - - - - -2-6
switching condition A -8-67

T

test without a motor -7-21
TH -4-34
three-phase AC power supply input
setting- -5-15
three-phase, 200-VAC power supply input - - - - - - - -4-11

torque reference filter - 8-84
trial operation
MECHATROLINK-III communications - - - - - - - - - 7-10
troubleshooting alarms - - - - - - - - - - - - - - - - - - 12-11
troubleshooting warnings - - - - - - - - - - - - - - - - - - 12-51
tuning parameters - 5-5
tuning-less
load level - 8-14
rigidity level - 8-14
tuning-less function - 8-12

V

vibration suppression - 8-56

W

writing parameters - 5-19

Z

zero clamping - 5-39
zero-speed stopping - 5-39

Revision History

The revision dates and numbers of the revised manuals are given on the bottom of the back cover.

MANUAL NO. SIEP S800001 62B <1>
Revision number

Published in Japan May 2015
Date of publication

Date of Publication	Rev. No.	Section	Revised Contents
January 2019	<9>	5.1.4, 7.6.3	Revision: Information in table of restrictions
		9.2.2, 9.2.3, 12.2.6, 12.2.7, 14.2.1, 14.2.2	Partly revised.
		12.2.3	Addition: Reset procedure with the SigmaWin+
		13.1.2	Revision: Information on Pn824
		Back cover	Revision: Address
September 2018	<8>	Preface	Partly revised.
		2.1.1	Revision: Built-in regenerative resistor power loss
		4.4.3, 5.15.1	Addition: Absolute linear encoder from Fagor Automation S. Coop.
		5.1.4, 7.6.3	Footnote in Origin Search
		Back cover	Revision: Address
April 2018	<7>	Preface	Partly revised.
		4.3.1	Revision: Specifications for L1C and L2C
December 2017	<6>	Preface	Partly revised.
		Preface, 1.4.2, 1.5.1, 5.12.1, 5.15.1	Addition: Information on Rotary Servomotors (SGM7M)
		1.2	Revision: Information on nameplate
		1.5.3	Addition: Information on SGLFW2-90A200A□L, SGLFW2-90A560A, and SGLFW2-1DA560A
		Chapter 12	Deletion: A.F50
		Back cover	Revision: Address
March 2017	<5>	Preface, 12.5	Partly revised.
		4.4.3, 5.15.1	Addition: Information on SQ47 and SQ57 Linear Encoders from Magnescale Co., Ltd.
		5.15.1	Addition: Information on LIC2100-Series and LC415 Linear Encoders from Heidenhain Corporation.
		5.15.1, 5.17.2	Addition: Information on RESOLUTE Linear Encoders from Renishaw PLC.
		5.19	Newly added.
		6.1.2	Addition: Information on forcing outputs with MECHATROLINK-III commands
		13.1.2	Revisions: Reference information
		Chapter 13	Addition: Pn56A and Pn56B
December 2016	<4>	Preface	Partly revised.
		1.4.2, 4.4.2, 4.4.3, 5.16.1, 5.17, 6.12	Addition: Information on Rotary Servomotors with 24-bit batteryless absolute encoders.
		Back cover	Revision: Address

Date of Publication	Rev. No.	Section	Revised Contents
October 2016	<3>	All chapters	Addition: Information on SGM7E and SGM7F Direct Drive Servomotors Deletion: Information on SGLC Linear Servomotors Addition: Information on SERVOPACKs with single-phase, 200-VAC power supply input Addition: Information on dynamic brake option
		Preface, 9.1, 9.2	Partly revised.
		2.1.1	Addition: Information on input current of control power supply
		2.1.3, 4.2, 4.5	Revision: “Linear Servomotor overheat protection signal input” changed to “overheat protection input.”
		3.7	Addition: EMC installations for single-phase 200-VAC and single-phase 100-VAC models
		4.4.3, 5.15.1, 5.17.2	Addition: Absolute linear encoders from Renishaw PLC (models:EL36Y-□□□□□□□□□□)
		6.5.1	Revision: Precautions when using an incremental linear encoder from Renishaw PLC
		6.14, 8.12.3	Newly added.
		Chapter 12	Addition: A.862 and A.93B
		Chapter 13	Addition: Pn022, Pn475, Pn476, Pn61A, Pn61B, Pn61C, and Pn61D Deletion: Pn52D
		14.2.2	Addition: Un02F
December 2015	<2>	All chapters	Addition: Information on SERVOPACKs with single-phase, 100-VAC power supply inputs Revision: Information on SigmaWin+ procedures
		Preface	Addition: Information on SGMMV Rotary Servomotors Revision: Information on certification for standards
		4.4.3, 5.15.1, 6.5.1	Addition: Information on SQ10 Linear Encoder from Magnescale Co., Ltd.
		9.4.1	Partly revised.
		1.5.2	Addition: Information on Direct Drive Servomotors (SGMCV-16D and -35D)
		9.5	Addition: Alarm tracing
		Chapter 12	Additions: A.bF5, A.bF6, A.bF7, A.bF8, and FL-6
		Back cover	Revision: Address
May 2015	<1>	Front cover, back cover	Revision: Format
		All chapters	Addition: Information on Safety Modules Addition: Information on dynamic brake
		Preface	Revision: Information on certification for standards
		2.1.1	Revision: Power loss
		4.2, 4.4.3, 4.5.3	Revision: Diagrams around Battery for absolute encoder
		5.15.1, 5.17.2	Addition: Information on Linear Encoders (ST1381 and ST1382) from Mitutoyo Corporation
		6.1.10	Revision: Information on speed limit during torque control
		7.6.3	Revision: Information on test without a motor
		8.3.3, 8.3.5	Revision: Related Parameters Addition: Related Warnings
		8.12.3	Revision: Information on current control mode selection
		Chapters 12 and 13	Revision: Reference information
		Chapter 12	Revision: Information on A.900, A.910, and A.911
		Chapter 13	Revision: Information on Pn601 and Pn604 Addition: Pn846
October 2014	–	–	First edition

Σ-7-Series AC Servo Drive

Σ-7S SERVOPACK with MECHATROLINK-III Communications References

RJ-45 Connectors

Product Manual

IRUMA BUSINESS CENTER (SOLUTION CENTER)
480, Kamifujisawa, Iruma, Saitama, 358-8555, Japan
Phone: +81-4-2962-5151 Fax: +81-4-2962-6138
http://www.yaskawa.co.jp

YASKAWA AMERICA, INC.
2121, Norman Drive South, Waukegan, IL 60085, U.S.A.
Phone: +1-800-YASKAWA (927-5292) or +1-847-887-7000 Fax: +1-847-887-7310
http://www.yaskawa.com

YASKAWA ELÉTRICO DO BRASIL LTDA.
777, Avenida Piraporinha, Diadema, São Paulo, 09950-000, Brasil
Phone: +55-11-3585-1100 Fax: +55-11-3585-1187
http://www.yaskawa.com.br

YASKAWA EUROPE GmbH
Hauptstraβe 185, 65760 Eschborn, Germany
Phone: +49-6196-569-300 Fax: +49-6196-569-398
http://www.yaskawa.eu.com E-mail: info@yaskawa.eu.com

YASKAWA ELECTRIC KOREA CORPORATION
35F, Three IFC, 10 Gukjegeumyung-ro, Yeongdeungpo-gu, Seoul, 07326, Korea
Phone: +82-2-784-7844 Fax: +82-2-784-8495
http://www.yaskawa.co.kr

YASKAWA ASIA PACIFIC PTE. LTD.
30A, Kallang Place, #06-01, 339213, Singapore
Phone: +65-6282-3003 Fax: +65-6289-3003
http://www.yaskawa.com.sg

YASKAWA ELECTRIC (THAILAND) CO., LTD.
59, 1st-5th Floor, Flourish Building, Soi Ratchadapisek 18, Ratchadapisek Road, Huaykwang, Bangkok, 10310, Thailand
Phone: +66-2-017-0099 Fax: +66-2-017-0799
http://www.yaskawa.co.th

YASKAWA ELECTRIC (CHINA) CO., LTD.
22F, Link Square 1, No.222, Hubin Road, Shanghai, 200021, China
Phone: +86-21-5385-2200 Fax: +86-21-5385-3299
http://www.yaskawa.com.cn

YASKAWA ELECTRIC (CHINA) CO., LTD. BEIJING OFFICE
Room 1011, Tower W3 Oriental Plaza, No.1, East Chang An Ave.,
Dong Cheng District, Beijing, 100738, China
Phone: +86-10-8518-4086 Fax: +86-10-8518-4082

YASKAWA ELECTRIC TAIWAN CORPORATION
12F, No. 207, Sec. 3, Beishin Rd., Shindian Dist., New Taipei City 23143, Taiwan
Phone: +886-2-8913-1333 Fax: +886-2-8913-1513 or +886-2-8913-1519
http://www.yaskawa.com.tw

YASKAWA

YASKAWA ELECTRIC CORPORATION

In the event that the end user of this product is to be the military and said product is to be employed in any weapons systems or the manufacture thereof, the export will fall under the relevant regulations as stipulated in the Foreign Exchange and Foreign Trade Regulations. Therefore, be sure to follow all procedures and submit all relevant documentation according to any and all rules, regulations and laws that may apply.

Specifications are subject to change without notice for ongoing product modifications and improvements.

© 2014 YASKAWA ELECTRIC CORPORATION

MANUAL NO. SIEP S800001 62J <9>

Published in Japan January 2019
18-10-15
Original instructions